Grade "A"
Pasteurized
Milk
Ordinance

1999 Revision

U.S. Department of Health and Human Services

Public Health Service

Food and Drug Administration

LIST OF PREVIOUS EDITIONS OF MILK ORDINANCE RECOMMENDED BY THE UNITED STATES PUBLIC HEALTH SERVICE/FOOD AND DRUG ADMINISTRATION

1924. *Ordinance* only. Reprint No. 971 from *Public Health Reports* of November 7, 1924.
1926. *Ordinance* only. Reprint No. 1099 from *Public Health Reports* of July 30, 1926.
1927. *Ordinance and Code*. Mimeographed tentative draft, November 1927.
1929. *Ordinance and Code*. Mimeographed, July 1929.
1929. *Ordinance and Code*. Mimeographed, September 1929.
1931. *Ordinance and Code*. Mimeographed, September 1931.
1933. *Ordinance* only. Mimeographed, July 1933.
1933. *Ordinance and Code*. Mimeographed, July 1933.
1933. *Ordinance* only. Rotoprinted, December 1933.
1933. *Ordinance and Code*. Rotoprinted, December 1933.
1934. *Ordinance and Code*. Rotoprinted, August 1934.
1934. *Ordinance* only. Rotoprinted, August 1934.
1935. *Ordinance and Code*. Printed as *Public Health Bulletin No. 220,* 1935 edition, July 1935.
1936. *Ordinance* only. Mimeographed, December 1936.
1936. *Ordinance and Code*. Printed as *Public Health Bulletin No. 220,* 1936 edition, January 1937.
1939. *Ordinance and Code*. Mimeographed, January 1939.
1939. *Ordinance* only. Mimeographed, February 1939.
1939. *Ordinance* only. Mimeographed, November 1939.
1939. *Ordinance and Code*. Printed as *Public Health Bulletin No. 220,* 1939 edition, February 1940.
1947. *Ordinance* only. Mimeographed tentative draft, August 1947.
1949. *Ordinance* only. Multilthed, April 1949.
1951. *Ordinance* only. Multilthed, November 1951.
1953. *Ordinance and Code*. Printed as *Public Health Service Publication No. 229*.
1965. *Pasteurized Milk Ordinance*. *Public Health Service Publication No. 229*.
1978. *Pasteurized Milk Ordinance*. *Public Health Service/Food and Drug Administration Publication No. 229*.
1983. *Pasteurized Milk Ordinance*. *Public Health Service/Food and Drug Administration Publication No. 229*.
1985. *Pasteurized Milk Ordinance*. *Public Health Service/Food and Drug Administration Publication No. 229.*
1989. *Pasteurized Milk Ordinance*. *Public Health Service/Food and Drug Administration Publication No. 229*.
1993. *Pasteurized Milk Ordinance*. *Public Health Service/Food and Drug Administration Publication No. 229*.
1995. *Pasteurized Milk Ordinance*. *Public Health Service/Food and Drug Administration Publication No. 229*.
1997. *Pasteurized Milk Ordinance*. *Public Health Service/Food and Drug Administration Publication No. 229*.

PUBLIC HEALTH SERVICE/FOOD AND DRUG ADMINISTRATION
PUBLICATION NO. 229

FOREWORD

The milk sanitation program of the United States Public Health Service is one of its oldest and most respected activities. The interest of the Public Health Service in milk sanitation stems from two important public health considerations. First, of all foods, none surpasses milk as a single source of those dietary elements needed for the maintenance of proper health, especially in children and older citizens. For this reason, the Service has for many years promoted increased milk consumption. Second, milk has a potential to serve as a vehicle of disease and has, in the past, been associated with disease outbreaks of major proportions.

The incidence of milkborne illness in the United States has been sharply reduced in recent years. In 1938, milkborne outbreaks constituted 25 percent of all disease outbreaks due to infected foods and contaminated water. Our most recent information reveals that milk and fluid milk products continue to be associated with less than 1 percent of such reported outbreaks. Many groups have contributed to this commendable achievement, including Public Health and Agricultural agencies, dairy and related industries, several interested professional groups, educational institutions and the consuming public. The Public Health Service is proud to have contributed to the protection and improvement of the milk supply of the nation through technical assistance, training, research, standards development, evaluation and certification activities.

Despite the progress that has been made, occasional milkborne outbreaks still occur, emphasizing the need for continued vigilance at every stage of production, processing, pasteurization and distribution of milk and milk products. During the past decade, problems associated with the sanitary control of milk and milk products have become extremely complex because of new products, new processes, new chemicals, new materials and new marketing patterns, which must be evaluated in terms of their public health significance. The *Grade "A" Pasteurized Milk Ordinance*--1978 Recommendations of the United States Public Health Service/Food and Drug Administration, 1999 Revision translates this new knowledge and technology into effective and practicable public health practices.

The responsibility for insuring the ready availability and safety of milk and milk products is not confined to an individual community or a State, or to the Federal Government, it is the concern of the entire nation. With the continued cooperation of all interested groups engaged in the sanitary control of milk and milk products, including Government and industry, such responsibility can be accepted with confidence.

PREFACE

Public Health Service activities in the area of milk sanitation began at the turn of the century with studies on the role of milk in the spread of disease. These studies led to the conclusion that effective public health control of milkborne disease requires the application of sanitation measures throughout the production, handling, pasteurization, and distribution of milk. These early studies were followed by research to identify and evaluate sanitary measures which might be used to control disease, including studies which led to improvement of the pasteurization process.

To assist States and municipalities in initiating and maintaining effective programs for the prevention of milkborne disease, the Public Health Service, in 1924, developed a model regulation, known as the *Standard Milk Ordinance* for voluntary adoption by State and local milk control agencies. To provide for the uniform interpretation of this *Ordinance*, an accompanying *Code* was published in 1927 which provided administrative and technical details as to satisfactory compliance. This model milk regulation, now titled the *Grade "A" Pasteurized Milk Ordinance*--1978 Recommendations of the United States Public Health Service/Food and Drug Administration, 1999 Revision, represents the 30th revision since 1924 and incorporates new knowledge into public health practice.

The *Grade "A" Pasteurized Milk Ordinance* was not produced by the Public Health Service/Food and Drug Administration alone. As with every preceding edition, it was developed with the assistance of milk sanitation and regulatory agencies at every level of Federal, State, and local government including both health and agriculture departments; all segments of the dairy industry including producers, plant operators, equipment manufacturers, and associations; many educational and research institutions; and with helpful comments from many individual sanitarians and others.

Public Health Service/Food and Drug Administration recommended *Grade "A" Pasteurized Milk Ordinance* is the basic standard used in the voluntary Cooperative State-PHS Program for Certification of Interstate Milk Shippers, a program participated in by all 50 States, the District of Columbia and U.S. Trust Territories. The National Conference on Interstate Milk Shipments (NCIMS) in accordance with the Memorandum of Understanding with the Food and Drug Administration, has at its biennial conferences in 1979, 1981, 1983, 1985, 1987, 1989, 1991, 1993, 1995, 1997 and 1999 recommended changes and modifications to the *Grade "A" Pasteurized Milk Ordinance*. These changes have been incorporated into this 1999 revision. The counsel and guidance rendered by the Conference in preparation of this edition of the *Grade "A" Pasteurized Milk Ordinance* is deeply appreciated.

The *Grade "A" Pasteurized Milk Ordinance* is incorporated by reference in Federal specifications for procurement of milk and milk products; is used as the sanitary regulation for milk and milk products served on interstate carriers; and is recognized by the public health agencies, the milk industry, and many others as a national standard for milk sanitation.

The *Grade "A" Pasteurized Milk Ordinance* adopted and uniformly applied, will continue to provide effective public health protection without being unduly burdensome to either regulatory agencies or the dairy industry. It represents a "grass-roots" consensus of current knowledge and experiences and as such represents a practical and equitable milk sanitation standard for the nation.

INTRODUCTION

The following *Grade "A" Pasteurized Milk Ordinance,* with Appendices, is recommended for legal adoption by States, counties, and municipalities, in order to encourage a greater uniformity and a higher level of excellence of milk sanitation practice in the United States. An important purpose of this recommended standard is to facilitate the shipment and acceptance of milk and milk products of high sanitary quality in interstate and intrastate commerce.

This edition of the *Ordinance* contains sanitary standards for *Grade "A* pasteurized milk and milk products defined in Section 1 only.

The following form is suggested for adoption by States, municipalities, and counties subject to the approval of the appropriate legal authority. Adoption of this form will reduce the cost of publishing and printing, and will enable the *Grade "A" Pasteurized Milk Ordinance* to be easily kept current. The adoption of this form is considered legal in many States and has been so adopted. The Council of State Governments has prepared a model State law, *Milk and Food Codes Adoption-by-Reference Act,*[1] which is recommended for enactment by States to enable communities to adopt milk and food ordinances by reference.

An ordinance to regulate the production, transportation, processing, handling, sampling, examination, labeling, and sale of milk and milk products; the inspection of dairy herds, dairy farms, and milk plants; the issuing and revocation of permits to milk producers, haulers, and distributors; and the fixing of penalties.

The.....of.....[2] ordains:

SECTION 1. The production, transportation, processing, handling, sampling, examination, labeling and sale of all milk and milk products sold for the ultimate consumption within the ..... of .....[2] or its jurisdiction; the inspection of dairy herds, dairy farms and milk plants; and the issuing and revocation of permits to milk producers, haulers and distributors shall be regulated in accordance with the provisions of the current edition of the *Pasteurized Milk Ordinance*, a certified copy[3] of which is filed in the office of the appropriate official. *Provided*, that Sections 15 and 16 of said ordinance shall be replaced, respectively by Sections 2 and 3 below.

SECTION 2. Any person who shall violate any of the provisions of this *Ordinance* shall be guilty of a misdemeanor and, upon conviction thereof, shall be punished by a fine of not more than $....., and/or such persons may be enjoined from continuing such violations. Each day upon which such a violation occurs shall constitute a separate violation.

SECTION 3. All Ordinances and parts of ordinances in conflict with this *Ordinance*, shall be repealed 12 months after the adoption of this *Ordinance*, at which time this *Ordinance* shall be in full force and effect, as provided by law.

Legal Aspects: Recommendations concerning legal aspects have been suggested from time to time by the Office of the General Counsel and have been incorporated into the *Ordinance.* Other changes have also been incorporated on the advice of various State and local legal counsel.

---

[1] A copy of the model act is included in Suggested State Legislation Programs for 1950, developed by the Council of State Governments, Box 11910, Iron Works Pike, Lexington, KY 40578.

[2] Substitute proper legal jurisdiction here and in all similar places throughout the Ordinance.

[3] A certified copy may be secured from the Department of Health and Human Services, Public Health Service, Food and Drug Administration(HFS-626), 200 C. Street, S.W., Washington, D.C. 20204.

The *Ordinance* has been widely adopted and used for many years and has been upheld by court actions. One of the most comprehensive decisions upholding the various provisions of the *Ordinance* was that of the District Court, Reno County, Kansas, in the case of *Billings et al. v. City of Hutchinson et al.,* decided May 1, 1934. In this action, the plaintiffs unsuccessfully sought to enjoin the enforcement of the Hutchinson ordinance on the grounds that (a) it was unreasonable; (b) it conflicted with State statutes; (c) the license fees provided in the local ordinance (but not in the *Ordinance* recommended by the Public Health Service) were in excess of expenses; and (d) the milk inspector was clothed with arbitrary powers. (Reprint No. 1629 from *Public Health Reports* of June 8, 1934.)

The model ordinance discourages the use of public health regulations to establish unwarranted trade barriers against the acceptance of high quality milk from other milksheds (Section 11). On repeated requests from the Association of State and Territorial Health Officers and the National Conference on Interstate Milk Shipments, the Public Health Service/Food and Drug Administration is actively cooperating in the voluntary program for the certification of interstate milk shippers. Such a program would be impossible without widespread agreement on uniform standards, such as those of the recommended *Ordinance.*

The value of these standards as a means of overcoming interstate trade barriers was recognized by the U.S. Supreme Court in the case of the *Dean Milk Company v. City of Madison.* (No. 258--October term, 1950). The Court reversed the decision of the Wisconsin Supreme Court which had sustained an ordinance requirement imposing a 5-mile limit on the location of pasteurization plants selling milk in Madison and pointed out that Madison consumers would be adequately safeguarded if the city relied upon the provisions of Section 11 of the Public Health Service's recommended *Milk Ordinance.*

The Public Health Service has no legal jurisdiction in the enforcement of milk sanitation standards, except on interstate carriers and milk and milk products shipped in interstate commerce. Elsewhere, it serves solely in an advisory and stimulative capacity. Its program is designed primarily to assist State and local regulatory agencies. Its aim is to promote the establishment of effective and well-balanced milk sanitation programs in each State; to stimulate the adoption of adequate and uniform State and local milk control legislation; and to encourage the application of uniform enforcement procedures through appropriate legal and educational measures.

When this *Ordinance* is adopted locally, its enforcement becomes a function of the local or State authorities. Consequently, the *Ordinance* should be adopted only if adequate provisions can be made for qualified personnel and for suitable laboratory facilities. Small municipalities which cannot afford to provide these services should arrange for supervision by the county or State health department, or seek cooperation with neighboring municipalities in organizing a milk-control district or area.

The charter and the legal counsel of the government unit involved should be consulted for information or advice on proper legal procedures, such as the recording and advertising of the *Ordinance* after passage.

Adoption: In the interest of national uniformity, it is recommended that no changes be made in this *Ordinance* when adopted by a State or local community, unless changes are necessary to avoid conflict with State law. Modifications should be contemplated with extreme caution so as not to render the *Ordinance* unenforceable. In order to promote uniformity, it is recommended that all of the administrative procedures be adopted as well.

Amendment of Existing Regulations: States and communities that have adopted the 1989 or earlier editions of the Public Health Service recommended milk sanitation ordinances are urged to bring such *Ordinance* up-to-date in order to take advantage of the most current developments in milk sanitation and administration. States and communities whose milk sanitation law or regulations are not based on past Public Health Service recommended milk sanitation ordinances are urged to consider the attendant public health benefits, as well as those economic in nature, which can accrue upon adoption and implementation of the *Grade "A" Pasteurized Milk Ordinance*.

CONTENTS

Page

LIST OF PREVIOUS EDITIONS OF MILK ORDINANCE RECOMMENDED BY THE UNITED STATES PUBLIC HEALTH SERVICE/FOOD AND DRUG ADMINISTRATION ..... **I**

FOREWORD ..... **III**

PREFACE ..... **V**

INTRODUCTION ..... **VII**

CONTENTS ..... **IX**

GRADE "A" PASTEURIZED MILK ORDINANCE - 1999 REVISION **1**

SECTION 1. DEFINITIONS 1
SECTION 2. ADULTERATED OR MISBRANDED MILK OR MILK PRODUCTS 5
SECTION 3. PERMITS 5
SECTION 4. LABELING 7
SECTION 5. INSPECTION OF DAIRY FARMS AND MILK PLANTS 9
SECTION 6. THE EXAMINATION OF MILK AND MILK PRODUCTS 14
SECTION 7. STANDARDS FOR GRADE "A" MILK AND MILK PRODUCTS 18

STANDARDS FOR GRADE "A" RAW MILK FOR PASTEURIZATION, ULTRA-PASTEURIZATION OR ASEPTIC PROCESSING **20**

ITEM 1R. ABNORMAL MILK 20
ITEM 2R. MILKING BARN, STABLE OR PARLOR--CONSTRUCTION 21
ITEM 4R. COWYARD 23
ITEM 5R. MILKHOUSE OR ROOM--CONSTRUCTION AND FACILITIES 24
ITEM 6R. MILKHOUSE OR ROOM--CLEANLINESS 27
ITEM 7R. TOILET 28
ITEM 8R. WATER SUPPLY 28
ITEM 9R. UTENSILS AND EQUIPMENT--CONSTRUCTION 30
ITEM 10R. UTENSILS AND EQUIPMENT--CLEANING 31
ITEM 11R. UTENSILS AND EQUIPMENT--SANITIZATION 32
ITEM 12R. UTENSILS AND EQUIPMENT--STORAGE 32
ITEM 13R. MILKING--FLANKS, UDDERS AND TEATS 33
ITEM 14R. PROTECTION FROM CONTAMINATION 34
ITEM 15R. DRUG AND CHEMICAL CONTROL 35
ITEM 16R. PERSONNEL--HAND-WASHING FACILITIES 36
ITEM 17R. PERSONNEL--CLEANLINESS 37
ITEM 18R. RAW MILK COOLING 37
ITEM 19R. INSECT AND RODENT CONTROL 39

STANDARDS FOR GRADE "A" PASTEURIZED, ULTRA-PASTEURIZED AND ASEPTICALLY PROCESSED MILK AND MILK PRODUCTS **40**

ITEM 1P. FLOORS--CONSTRUCTION 40
ITEM 2P. WALLS AND CEILINGS--CONSTRUCTION 41
ITEM 3P. DOORS AND WINDOWS 41
ITEM 4P. LIGHTING AND VENTILATION 42
ITEM 5P. SEPARATE ROOMS 42
ITEM 6P. TOILET-SEWAGE DISPOSAL FACILITIES 44
ITEM 7P. WATER SUPPLY 45
ITEM 8P. HAND-WASHING FACILITIES 46
ITEM 9P. MILK PLANT CLEANLINESS 46

ITEM 10P. SANITARY PIPING 47
PUBLIC-HEALTH REASON 47
ITEM 11P. CONSTRUCTION AND REPAIR OF CONTAINERS AND EQUIPMENT 48
ITEM 12P. CLEANING AND SANITIZING OF CONTAINERS AND EQUIPMENT 50
ITEM 13P. STORAGE OF CLEANED CONTAINERS AND EQUIPMENT 53
ITEM 14P. STORAGE OF SINGLE-SERVICE CONTAINERS, UTENSILS AND MATERIALS 54
ITEM 15P. PROTECTION FROM CONTAMINATION 55
ITEM 16P. PASTEURIZATION AND ASEPTIC PROCESSING 59
ITEM 16P(A). BATCH PASTEURIZATION 60
ITEM 16P(B). HIGH-TEMPERATURE, SHORT-TIME, (HTST) CONTINUOUS-FLOW PASTEURIZATION 64
ITEM 16P(C). ASEPTIC PROCESSING SYSTEMS 70
ITEM 16P(D). PASTEURIZERS AND ASEPTIC PROCESSING SYSTEMS EMPLOYING REGENERATIVE HEATING 74
MILK-TO-MILK REGENERATIVE 74
ITEM 16P(E). PASTEURIZATION AND ASEPTIC PROCESSING RECORDS, EQUIPMENT TESTS AND EXAMINATIONS 77
ITEM 17P. COOLING OF MILK 81
ITEM 18P. BOTTLING AND PACKAGING 82
ITEM 19P. CAPPING 83
ITEM 20P. PERSONNEL--CLEANLINESS 85
ITEM 21P. VEHICLES 85
ITEM 22P. SURROUNDINGS 85
SECTION 8. ANIMAL HEALTH 86
SECTION 9. MILK AND MILK PRODUCTS WHICH MAY BE SOLD 88
SECTION 10. TRANSFERRING; DELIVERY CONTAINERS; COOLING 88
SECTION 11. MILK AND MILK PRODUCTS FROM POINTS BEYOND THE LIMITS OF ROUTINE INSPECTION 89
SECTION 12. PLANS FOR CONSTRUCTION AND RE-CONSTRUCTION 90
SECTION 13. PERSONNEL HEALTH 90
SECTION 14. PROCEDURE WHEN INFECTION OR HIGH RISK OF INFECTION IS DISCOVERED 91
SECTION 15. ENFORCEMENT 93
SECTION 16. PENALTY 93
SECTION 17. REPEAL AND DATE OF EFFECT 93
SECTION 18. SEPARABILITY CLAUSE 93

APPENDIX A. ANIMAL DISEASE CONTROL 95

APPENDIX B. MILK SAMPLING, HAULING, AND TRANSPORTATION 97

I. MILK SAMPLING AND HAULING PROCEDURES 97
II. MILK TANK TRUCK PERMITTING AND INSPECTION 101

APPENDIX C. DAIRY FARM CONSTRUCTION STANDARDS; MILK PRODUCTION 109

I. TOILET AND SEWAGE DISPOSAL FACILITIES 109
II. GUIDELINE #45 - GRAVITY FLOW GUTTERS FOR MANURE REMOVAL IN MILKING BARNS 114
III. CONVALESCENT (MATERNITY) PENS IN MILKING BARNS AND STABLES 117
IV. GUIDELINES FOR CONVENTIONAL STALL BARN WITH GUTTER GRATES OVER LIQUID MANURE STORAGE 118
V. DAIRY--CONSTRUCTION AND OPERATION 122
MILKING BARN, STABLE OR 122
PARLOR 122
MILKHOUSE OR MILKROOM 123
MILKING METHODS 124
DRUG RESIDUE AVOIDANCE CONTROL MEASURES 125
INSECT AND RODENT CONTROL 125

APPENDIX D. STANDARDS FOR WATER SOURCES 127

I. LOCATION OF WATER SOURCES 127
II. CONSTRUCTION 130
III. DISINFECTION OF WATER SOURCES 135
IV. CONTINUOUS WATER DISINFECTION 138
V. WATER RECLAIMED FROM THE CONDENSING OF MILK AND MILK PRODUCTS 140
VI. WATER RECLAIMED FROM HEAT EXCHANGER PROCESSES 141
VII. DRAWINGS OF CONSTRUCTION DETAILS FOR WATER SOURCES 142

APPENDIX E. EXAMPLES OF 3-OUT-OF-5 COMPLIANCE ENFORCEMENT PROCEDURES 161

APPENDIX F. SANITIZATION 163

APPENDIX G. CHEMICAL AND BACTERIOLOGICAL TESTS 165

I. PRIVATE WATER SUPPLIES AND RECIRCULATED WATER--BACTERIOLOGICAL. 165
II. PASTEURIZATION EFFICIENCY-FIELD PHOSPHATASE TEST 165
III. PHOSPHATASE REACTIVATION IN HTST PASTEURIZED PRODUCTS 166
IV. DETECTION OF PESTICIDES IN MILK 166
V. DETECTION OF DRUG RESIDUES IN MILK 167
VI. ANALYSIS OF MILK AND MILK PRODUCTS FOR VITAMIN A AND D_3 CONTENT 168

APPENDIX H. PASTEURIZATION EQUIPMENT AND PROCEDURES 169

I. HTST PASTEURIZATION 169
II. AIR UNDER PRESSURE; MILK AND MILK PRODUCT-CONTACT SURFACES 178
III. CULINARY STEAM; MILK AND MILK PRODUCTS 183
IV. THERMOMETER SPECIFICATIONS 185
V. CRITERIA FOR THE EVALUATION OF COMPUTERIZED SYSTEMS FOR GRADE 'A' PUBLIC HEALTH CONTROLS 191

APPENDIX I. PASTEURIZATION EQUIPMENT AND CONTROLS--TESTS 203

I. TESTING APPARATUS SPECIFICATIONS 203
II. TEST PROCEDURES 204

APPENDIX J. STANDARDS FOR THE FABRICATION OF SINGLE-SERVICE CONTAINERS AND CLOSURES FOR MILK AND MILK PRODUCTS 241

PREFACE 241
A. PURPOSE AND SCOPE 241
B. DEFINITIONS 241
C. BACTERIAL STANDARDS AND EXAMINATION OF SINGLE-SERVICE CONTAINERS AND CLOSURES 243
D. FABRICATION PLANT STANDARDS 244

1. FLOORS 244
2. WALLS AND CEILINGS 244
3. DOORS AND WINDOWS 244
4. LIGHTING AND VENTILATION 245
5. SEPARATE ROOMS 245
6. TOILET FACILITIES - SEWAGE DISPOSAL 245
7. WATER SUPPLY 245
8. HAND-WASHING FACILITIES 246
9. PLANT CLEANLINESS 246
10. LOCKER AND LUNCH ROOMS 246
11. DISPOSAL OF WASTES 246
12. PERSONAL CLEANLINESS 246
13. PROTECTION FROM CONTAMINATION 247
14. STORAGE OF FINISHED PRODUCT AND MATERIAL IN PROCESS 247
15. FABRICATING, PROCESSING AND PACKAGING EQUIPMENT 248

16. EQUIPMENT AND MATERIALS FOR CONSTRUCTION OF CONTAINERS AND CLOSURES 249
17. WAXES, ADHESIVES, SEALANTS AND INKS 249
18. HANDLING OF CONTAINERS AND EQUIPMENT 249
19. WRAPPING AND SHIPPING 249
20. IDENTIFICATION AND RECORDS 250
21. SURROUNDINGS 250

APPENDIX K. RESERVED FOR FUTURE USE. 253

APPENDIX L. STANDARDS OF IDENTITY FOR MILK AND MILK PRODUCTS AND *FEDERAL FOOD, DRUG, AND COSMETIC ACT* 255

APPENDIX M. REPORTS AND RECORDS 257

MILK PLANT INSPECTION REPORT 258
DAIRY FARM INSPECTION REPORT 259
MILK PLANT EQUIPMENT TEST REPORT 260

APPENDIX N. DRUG RESIDUE TESTING AND FARM SURVEILLANCE 261

I. INDUSTRY RESPONSIBILITIES 261
II. REGULATORY AGENCY RESPONSIBILITIES 261
III. ESTABLISHED TOLERANCES AND/OR SAFE LEVELS OF DRUG RESIDUES 262

APPENDIX O. VITAMIN FORTIFICATION OF FLUID MILK PRODUCTS 265

APPENDIX P. PERFORMANCE-BASED DAIRY FARM INSPECTION SYSTEM 271

INDEX 273

ILLUSTRATIONS

Page

Figure 1. Side Cross Section of a Gravity Flow Gutter 114
Figure 2. Stepped Gravity Flow Gutter 115
Figure 3. Cross Section of Typical Gutter and Grate 115
Figure 4. Manure Transfer to Storage 117
Figure 5. Side Cross Section of a Convalescent Pen 118
Figure 6. Schematic Diagram Showing Suggested Exhaust Fan Locations for a Typical Stall Dairy Barn with Gutter Grates Over Liquid Manure Storage 121
Figure 7. Schematic Diagram Showing General Pattern of Ventilation Air Movement, Slot Inlet Design and Fan House for Pit Fans 121
Figure 8. Bored Well with Driven Well Point 143
Figure 9. Drilled Well with Submersible Pump 144
Figure 10. Dug Well with Two-Pipe Jet Pump Installation 145
Figure 11. Pumphouse 146
Figure 12. Spring Protection 147
Figure 13. Pond 148
Figure 14. Schematic Diagram of a Pond Water-Treatment System 149
Figure 15. Cistern 150
Figure 16. Typical Concrete Reservoir 151
Figure 17. Pitless Adapter with Submersible Pump Installation for Basement Storage 152
Figure 18. Clamp-on Pitless Adapter with Concentric External Piping for "Shallow Well" Pump Installation 153
Figure 19. Pitless Unit with Concentric External Piping for Jet Pump Installation 154
Figure 20. Weld-on Pitless Adapter with Concentric External Piping for "Shallow Well" Pump Installation 155
Figure 21. Well Seal for Jet Pump Installation 156
Figure 22. Well Seal for Submersible Pump Installation 157
Figure 23. Typical Valve and Box, Manhole Covers, and Piping Installation 158
Figure 24. Suction Feeder 159
Figure 25. Positive Displacement Chlorinator 160
Figure 26. Milk-to-Milk Regeneration--Homogenizer Upstream from Holder 170
Figure 27. Milk-to-Milk Regeneration--Surface Cooler 172
Figure 28. Milk-to-Milk Regeneration--Booster Pump 175
Figure 29. Milk-to-Milk Regeneration--Homogenizer and Vacuum Chambers Downstream from Flow-Diversion Device 176
Figure 30. Controls for Steam Injection Pasteurizer 176
Figure 31. HTST System with a Magnetic Flow Meter Using a Constant Speed Centrifugal Pump and a Control Valve 177
Figure 32. HTST System with a Magnetic Flow Meter Using an A-C Variable Speed Centrifugal Pump 177
Figure 33. Individual Compression-Type Air Supply 180
Figure 34. Central Compression-Type Air Supply 181
Figure 35. Individual Blower Type Air Supply 181
Figure 36. Individual Fan Type Air Supply 182
Figure 37. Rotating Mandrel Assembly 182

Figure 38. Culinary Steam Piping Assembly for Steam Infusion or Injection.....184
Figure 39. Culinary Steam Piping Assembly for Airspace Heating or Defoaming.....184
Figure 40. Logic Diagram, Flow-diversion Device, Divert Valve Stem.....197
Figure 41. Logic Diagram, Flow-diversion Device, Leak Detect Valve Stem.....198
Figure 42. Logic Diagram, Safety Thermal Limit Recorder-Controller.....199
Figure 43. Logic Diagram, Timing Pump.....200
Figure 44. Logic Diagram, Booster Pump.....201
Figure 45. Pressure Switch Setting.....239
Figure 46. Vitamin Fortification.....269

TABLES

Table *Page*

Table 1. Chemical, Bacteriological and Temperature Standards.....19
Table 2. Combinations of Causticity, Time and Temperature, of Equal Bactericidal Value, for the Soaker Tank of Soaker Type Bottle Washers.....52
Table 3. Pasteurization Temperature vs. Time.....60
Table 4. Equipment Tests--Batch, HTST, HHST and Aseptic Processing Systems.....80
Table 5. Removal of Restrictions When Infection or High Risk of Infection is Discovered.....92
Table 6. Slot Size vs. Cattle Age.....115
Table 7. Gravity Flow Gutter Depth vs. Length for Manure from Lactating Animals.....116
Table 8. Step Height vs. Length for Stepped Gravity Flow Gutters.....116
Table 9. Work Water Volume of Various Sized Pipelines.....124
Table 10. Distance of Well from Sources of Contamination.....128
Table 11. Example of 3-out-of-5 Compliance Enforcement Procedures for Pasteurized Milk..161
Table 12. Example of 3-out-of-5 Compliance Enforcement Procedures for Raw Milk Abnormal Milk Tests.....162
Table 13. Holding Tube Length--HHST Pasteurizers--Indirect Heating.....230
Table 14. Centerline Distances of 3-A Fittings.....231
Table 15. Holding Tube Length, HHST Pasteurizers, Direct Heating.....233

GRADE "A" PASTEURIZED MILK ORDINANCE - 1999 Revision

An ordinance defining "milk" and certain "milk products", "milk producer", "pasteurization", etc.; prohibiting the sale of adulterated and misbranded milk and milk products; requiring permits for the sale of milk and milk products; regulating the inspection of dairy farms and milk plants, the examination, labeling, pasteurization, aseptic processing and packaging and distribution and sale of milk and milk products; providing for the construction of future dairy farms and milk plants; and the enforcement of this *Ordinance* and the fixing of penalties.

Be it ordained by the ... of ...[1] as follows:

SECTION 1. DEFINITIONS

Terms used in this document not specifically defined herein are those within Title 21, Code of Federal Regulations and/or the *Federal Food, Drug, and Cosmetic Act* as amended.

The following additional definitions shall apply in the interpretation and the enforcement of this *Ordinance*:

A. **BULK MILK HAULER/SAMPLER:** A bulk milk hauler/sampler is any person who collects official samples and may transport raw milk from a farm and/or raw milk products to or from a milk plant, receiving station or transfer station and has in their possession a permit from any state to sample such products.

B. **BULK MILK PICKUP TANKER:** A bulk milk pickup tanker is a vehicle, including the truck, tank and those appurtenances necessary for its use, used by a bulk milk hauler/sampler to transport bulk raw milk for pasteurization from a dairy farm to a milk plant, receiving station, or transfer station.

C. **CONCENTRATED MILK:** Concentrated milk is a fluid product, unsterilized and unsweetened, resulting from the removal of a considerable portion of the water from the milk, which, when combined with potable water in accordance with instructions printed on the container, results in a product conforming with the milkfat and milk solids not fat levels of milk as defined in this section.

D. **CONCENTRATED MILK PRODUCTS:** Concentrated milk products shall be taken to mean and to include homogenized concentrated milk, concentrated nonfat milk, concentrated reduced fat or low fat milk, and similar concentrated products made from concentrated milk or concentrated non-fat milk, and which, when combined with potable water in accordance with instructions printed on the container, conform with the definitions of the corresponding milk products in this section.

E. **DAIRY FARM:** A dairy farm is any place or premises where one or more lactating animals (cows, goats or sheep) are kept, and from which a part or all of the milk or milk product(s) is provided, sold or offered for sale to a receiving station, transfer station or milk plant.

F. **DAIRY PLANT SAMPLER:** A person responsible for the collection of official samples for regulatory purposes

[1] Substitute proper legal jurisdiction here and in all similar places throughout the Ordinance.

outlined in Section 6 of the *Grade "A" Pasteurized Milk Ordinance*. This person is an employee of the regulatory agency and is evaluated at least once every two-year period by the State Sampling Surveillance Officer.

G. **EGGNOG OR BOILED CUSTARD:** Eggnog or boiled custard is the product defined in the *Code of Federal Regulations*, Title 21, Section 131.170.

H. **FROZEN MILK CONCENTRATE:** Frozen milk concentrate is a frozen milk product with a composition of milkfat and milk solids not fat in such proportions that when a given volume of concentrate is mixed with a given volume of water the reconstituted product conforms to the milkfat and milk solids not fat requirements of whole milk. In the manufacturing process, water may be used to adjust the primary concentrate to the final desired concentration. The adjusted primary concentrate is pasteurized, packaged, and immediately frozen. This product is stored, transported and sold in the frozen state.

I. **GOAT MILK:** Goat milk is the normal lacteal secretion, practically free of colostrum, obtained by the complete milking of one or more healthy goats. Goat milk sold in retail packages shall contain not less than 2.5 percent milkfat and not less than 7.5 percent milk solids not fat. Goat milk shall be produced according to the sanitary standards of this *Ordinance*. The word "milk" shall be interpreted to include goat milk.

J. **GRADE "A" DRY MILK AND WHEY PRODUCTS:** Grade "A" dry milk and whey products are products which have been produced for use in Grade "A" pasteurized or aseptically processed milk products and which have been manufactured under the provisions of the most current revision of the *Grade "A" Condensed and Dry Milk Products and Condensed and Dry Whey--Suppliment I to the Grade "A" Pasteurized Milk Ordinance.*

K. **MILK DISTRIBUTOR:** A milk distributor is any person who offers for sale or sells to another any milk or milk products.

L. **MILK PLANT:** A milk plant is any place, premises or establishment where milk or milk products are collected, handled, processed, stored, pasteurized, aseptically processed, packaged, or prepared for distribution.

M. **MILK PRODUCER:** A milk producer is any person who operates a dairy farm and provides, sells or offers milk for sale to a milk plant, receiving station or transfer station.

N. **MILK PRODUCTS:** Milk products include cream, light cream, light whipping cream, heavy cream, heavy whipping cream, whipped cream, whipped light cream, sour cream, acidified sour cream, cultured sour cream, half-and-half, sour half-and-half, acidified sour half-and-half, cultured sour half-and-half, reconstituted or recombined milk and milk products, concentrated milk, concentrated milk products, nonfat (skim) milk, reduced fat or lowfat milk, frozen milk concentrate, eggnog, buttermilk, cultured milk, cultured reduced fat or lowfat milk, cultured nonfat (skim) milk, yogurt, lowfat yogurt, nonfat yogurt, acidified milk, acidified reduced fat or lowfat milk, acidified nonfat (skim) milk, low-sodium milk, low-sodium reduced fat or lowfat milk, low-sodium nonfat (skim) milk, lactose-reduced milk, lactose-reduced reduced fat or lowfat milk, lactose-reduced nonfat (skim) milk, aseptically processed

and packaged milk and milk products as defined in this section, milk, reduced fat or lowfat milk or nonfat (skim) milk with added safe and suitable microbial organisms and any other milk product made by the addition or subtraction of milkfat or addition of safe and suitable optional ingredients for protein, vitamin or mineral fortification of milk products defined herein.[2,3]

Milk products also include those dairy foods made by modifying the federally standardized products listed in this Section in accordance with 21 CFR 130.10 - Requirements for foods named by use of a nutrient content claim and a standardized term.

This definition shall include those milk and milk products, as defined herein, which have been aseptically processed and then packaged.

Milk and milk products which have been retort processed after packaging or which have been concentrated, condensed or dried are included in this definition only if they are used as an ingredient to produce any milk or milk product defined herein or if they are labeled as Grade "A" as described in section 4.

This definition is not intended to include dietary products (except as defined herein), infant formula, ice cream or other desserts, butter or cheese.

O. **MILK TANK TRUCK:** A milk tank truck is the term used to describe both a bulk milk pickup tanker and a milk transport tank.

P. **MILK TANK TRUCK CLEANING FACILITY:** Any place, premise, or establishment, separate from a milk plant, receiving or transfer station, where a milk tank truck is cleaned and sanitized.

Q. **MILK TANK TRUCK DRIVER:** A milk tank truck driver is any person who transports raw or pasteurized milk products to or from a milk plant, receiving station or transfer station. Any transportation of a direct farm pickup requires the milk tank truck driver to have responsibility for accompanying official samples.

R. **MILK TRANSPORT TANK:** A milk transport tank is a vehicle, including the truck and tank, used by a bulk milk hauler/sampler to transport bulk shipments of milk from a milk plant, receiving station or transfer station to another milk plant, receiving station or transfer station.

S. **MILK TRANSPORTATION COMPANY**: A milk transportation company is the person responsible for a milk tank truck(s).

T. **OFFICIAL LABORATORY:** An official laboratory is a biological, chemical or physical laboratory which is under the

---

[2] Communities and/or states desiring to regulate Cottage cheese and dry curd cottage cheese under the terms of this *Ordinance* should insert the following definitions:

Cottage Cheese – Cottage cheese is the product defined in the Code of Federal Regulations, Title 21 Section 133.128.

Dry Curd Cottage Cheese – Dry curd cottage cheese is the product defined in the Code of Federal Regulations, Title 21 Section 133.129.

[3] Whey, caseinates, lactalbumin and other milk derived ingredients are required to be derived from a Grade "A" raw milk source.

direct supervision of the State or a local regulatory agency.

U. **OFFICIALLY DESIGNATED LABORATORY:** An officially designated laboratory is a commercial laboratory authorized to do official work by the regulatory agency, or a milk industry laboratory officially designated by the regulatory agency for the examination of producer samples of Grade "A" raw milk for pasteurization and commingled milk tank truck samples of raw milk for drug residues and bacterial limits.

V. **PASTEURIZATION:** The terms "pasteurization", "pasteurized" and similar terms shall mean the process of heating every particle of milk or milk product, in properly designed and operated equipment, to one of the temperatures given in the following chart and held continuously at or above that temperature for at least the corresponding specified time:

Temperature	Time
*63°C (145°F)	30 minutes
*72°C (161°F)	15 seconds
89°C (191°F)	1.0 second
90°C (194°F)	0.5 second
94°C (201°F)	0.1 second
96°C (204°F)	0.05 second
100°C (212°F)	0.01 second
*If the fat content of the milk product is 10 percent or more, or if it contains added sweeteners, the specified temperature shall be increased by 3°C (5°F). *Provided*, that eggnog shall be heated to at least the following temperature and time specifications:	
69°C (155°F)	30 minutes
80°C (175°F)	25 seconds
83°C (180°F)	15 seconds

Provided further, that nothing shall be construed as barring any other pasteurization process which has been recognized by the Food and Drug Administration to be equally efficient and which is approved by the regulatory agency.

W. **PERSON:** The word "person" shall include any individual, plant operator, partnership, corporation, company, firm, trustee, association or institution.

X. **RECEIVING STATION:** A receiving station is any place, premises or establishment where raw milk is received, collected, handled, stored or cooled and prepared for further transporting.

Y. **RECONSTITUTED OR RECOMBINED MILK AND MILK PRODUCTS:** Reconstituted or recombined milk and/or milk products shall mean milk or milk products defined in this section which result from reconstituting or recombining of milk constituents with potable water when appropriate.[4]

Z. **REGULATORY AGENCY:** The regulatory agency shall mean the ... of the …[5]or his authorized representative. The term, "regulatory agency", whenever it appears in the *Ordinance* shall mean the appropriate agency having jurisdiction and control over the matters embraced within this *Ordinance*.

[4] Where State law does not permit the sale of reconstituted or recombined milk and/or milk products, Definition Y and other corresponding references should be omitted.

[5] Substitute proper legal jurisdiction here and in all similar places throughout the Ordinance.

AA. **SHEEP MILK:** Sheep milk is the normal lacteal secretion practically free of colostrum, obtained by the complete milking of one or more healthy sheep. Sheep milk shall be produced according to the sanitary standards of this *Ordinance*. The word "milk" shall be interpreted to include sheep milk.

BB. **TRANSFER STATION:** A transfer station is any place, premises or establishment where milk or milk products are transferred directly from one milk tank truck to another.

SECTION 2. ADULTERATED OR MISBRANDED MILK OR MILK PRODUCTS

No person shall, within the ... of ...[6] ., or its jurisdiction, produce, provide, sell, offer, or expose for sale or have in possession with intent to sell any milk or milk product which is adulterated or misbranded. *Provided*, that in an emergency, the sale of pasteurized milk and milk products which do not fully meet the requirements of this *Ordinance*, may be authorized by the regulatory agency.

Any adulterated or misbranded milk or milk product may be impounded by the regulatory agency and disposed of in accordance with applicable laws or regulations.

ADMINISTRATIVE PROCEDURES

This section of the *Ordinance* shall be used in impounding the products of, or preferring charges against, persons who adulterate or misbrand their milk or milk products, or label them with any grade designation not authorized by the regulatory agency under the terms of this *Ordinance* or who sell or deliver ungraded milk or milk products, except as may be permitted under this section in an emergency. An emergency is defined as a general and acute shortage in the milkshed, not simply one distributor's shortage.

SECTION 3. PERMITS

It shall be unlawful for any person who does not possess a permit from the regulatory agency of the ... of ... to bring into, send into or receive into the ... of ...[7] or its jurisdiction, for sale, or to sell, or offer for sale therein or to have in storage any milk or milk products defined in this *Ordinance*. *Provided*, that grocery stores, restaurants, soda fountains and similar establishments where milk or milk products are served or sold at retail, but not processed, may be exempt from the requirements of this section.

Only a person who complies with the requirements of this *Ordinance* shall be entitled to receive and retain such a permit. Permits shall not be transferable with respect to persons and/or locations.

The regulatory agency shall suspend such permit, whenever it has reason to believe that a public health hazard exists; or whenever the permit holder has violated any of the requirements of this *Ordinance*; or whenever the permit holder has interfered with the regulatory agency in the performance of its duties. *Provided*, that the regulatory agency shall, in all cases except where the milk or milk product involved creates, or appears to create, an imminent

[6] Substitute proper legal jurisdiction here and in all similar places throughout the Ordinance.

[7] Substitute proper legal jurisdiction here and in all similar places throughout the Ordinance.

hazard to the public health; or in any case of a willful refusal to permit authorized inspection, serve upon the holder a written notice of intent to suspend permit, which notice shall specify with particularity the violation(s) in question and afford the holder such reasonable opportunity to correct such violation(s) as may be agreed to by the parties, or in the absence of agreement, fixed by the regulatory agency before making any order of suspension effective. A suspension of permit shall remain in effect until the violation(s) has been corrected to the satisfaction of the regulatory agency.

Upon notification, acceptable to the regulatory agency, by any person whose permit has been suspended, or upon application within 48 hours of any person who has been served with a notice of intention to suspend, and in the latter case before suspension, the regulatory agency shall within 72 hours proceed to a hearing to ascertain the facts of such violation(s) or interference and upon evidence presented at such hearing shall affirm, modify or rescind the suspension or intention to suspend.

Upon repeated violation(s), the regulatory agency may revoke such permit following reasonable notice to the permit holder and an opportunity for a hearing. This section is not intended to preclude the institution of court action as provided in Sections 5 and 6.

ADMINISTRATIVE PROCEDURES

ISSUANCE OF PERMITS: Every milk producer, milk distributor, bulk milk hauler/sampler, milk tank truck[8], milk transportation company and each milk plant, receiving station, milk tank truck cleaning facility and transfer station operator shall hold a valid permit. The permit for a milk tank truck or milk tank trucks may be issued to the milk transportation company. Milk producers who transport milk or milk products, only from their own dairy farms; employees of a milk distributor or milk plant operator who possesses a valid permit; and employees of a milk transportation company that possesses a valid permit and transports milk from a milk plant, receiving station or transfer station shall not be required to possess a bulk milk hauler/sampler's permit. Grocery stores, restaurants, soda fountains and similar establishments where milk and milk products are served or sold at retail, but not processed, may be exempt from the requirements of this section.

SUSPENSION OF PERMIT: When any requirement(s) of this *Ordinance* is violated, the permit holder is subject to the suspension of his permit.

The regulatory agency may forego suspension of the permit, provided the product or products in violation are not sold or offered for sale as Grade "A" product. A regulatory agency may allow the imposition of a monetary penalty in lieu of a permit suspension, provided product or products in violation are not sold or offered for sale as Grade "A" product.

HEARINGS: If a State or municipal administrative procedure act, which provides procedures for administrative hearings and judicial review of administrative determinations, is available, the act shall be made applicable by reference to the hearings provided for in the *Ordinance*. If such administrative procedures act is not available, appropriate procedures, including provision for notice, hearing officer, his authority, record of hearing, rules of evidence and court review shall be established by appropriate authority.

[8] The permit for a milk tank truck may be issued to the responsible person for the milk tank truck(s).

REINSTATEMENT OF PERMITS: Any producer, distributor, bulk milk hauler/sampler, milk transportation company or plant operator whose permit has been suspended may make written application for the reinstatement of his permit.

When the permit suspension has been due to a violation of any of the bacterial, coliform or cooling-temperature standards, the regulatory agency, within 1 week after the receipt of notification for reinstatement of permit, shall issue a temporary permit after determining by an inspection of the facilities and operating methods that the conditions responsible for the violation have been corrected. When a permit suspension has been due to a violation of the somatic cell count standard, the regulatory agency may issue a temporary permit whenever a resampling of the herd's milk supply indicates the milk supply to be within acceptable limits as prescribed in Section 7. Samples shall then be taken at the rate of not more than two per week on separate days within a 3-week period and the regulatory agency shall reinstate the permit upon compliance with the appropriate standard as determined in accordance with Section 6 of this *Ordinance*.

Whenever the permit suspension has been due to a violation of a requirement other than bacteriological, coliform, somatic cell count, drug residue test or cooling-temperature standards, the notification shall indicate that the violation(s) has been corrected. Within 1 week of the receipt of such notification, the regulatory agency shall make an inspection of the applicant's establishment, and as many additional inspections thereafter as are deemed necessary, to determine that the applicant's establishment is complying with the requirements. When the findings justify, the permit shall be reinstated.

When a permit suspension has been due to positive drug residues, the permit shall be reinstated in accordance with the provisions of Appendix N.

SECTION 4. LABELING

All bottles, containers and packages enclosing milk or milk products defined in Section 1 of this *Ordinance* shall be labeled in accordance with the applicable requirements of the *Federal Food, Drug, and Cosmetic Act as amended*, the *Nutrition Labeling and Education Act of 1990*, and regulations developed thereunder, the Code of Federal Regulations, and in addition, shall comply with applicable requirements of this section as follows:

All bottles, containers and packages enclosing milk or milk products, except milk tank trucks, storage tanks and cans of raw milk from individual dairy farms, shall be conspicuously marked with:

1. The identity of the plant where pasteurized, ultra-pasteurized or aseptically processed.
2. The words "keep refrigerated after opening" in the case of aseptically processed milk and milk products.
3. The word "Goat" or "Sheep" shall precede the name of the milk or milk product when the product is or is made from goat or sheep milk respectively.
4. The words "Grade “A”" on the exterior surface. Acceptable locations shall include the principal display panel, the secondary or informational panel, or the cap/cover.
5. The word "reconstituted" or "recombined" if the product is made by reconstitution or recombination.

All vehicles and milk tank trucks containing milk or milk products shall be

legibly marked with the name and address of the milk plant or hauler in possession of the contents.

Milk tank trucks transporting raw, heat-treated or pasteurized milk and milk products to a milk plant from another milk plant, receiving or transfer station are required to be marked with the name and address of the milk plant or hauler and shall be sealed; in addition, for each such shipment, a shipping statement shall be prepared containing at least the following information:

a.) Shipper's name, address and permit number. Each milk tank truck load of milk shall include the IMS Bulk Tank Unit (BTU) identification number(s) or the IMS listed Plant Number (for farm groups listed with a plant) on the weight ticket or manifest.
b.) Permit identification of hauler, if not an employee of the shipper.
c.) Point of origin of shipment.
d.) Tanker identification number.
e.) Name of product.
f.) Weight of product.
g.) Temperature of product when loaded.
h.) Date of shipment.
i.) Name of supervising regulatory agency at the point of origin of shipment.
j.) Whether the contents are raw, pasteurized, or in the case of cream, lowfat or skim milk, whether it has been heat treated.
k.) Seal number on inlet, outlet, wash connections and vents.
l.) Grade of product.

All cans of raw milk from individual dairy farms shall be identified by the name or number of the individual milk producer.

Each milk tank truck load of milk shall be accompanied by documentation (weigh ticket or manifest) which shall include the IMS BTU Identification Number(s) or the IMS Listed Plant Number (for farm groups listed with a plant).

ADMINISTRATIVE PROCEDURES

EMERGENCY SUPPLIES--LABELING: When the sale of ungraded milk or milk products is authorized during emergencies, under the terms of Section 2, the label must bear the designation "ungraded". When such labeling is not available, the regulatory agency shall take immediate steps to inform the public that the particular supply is ungraded and that the supply will be properly labeled as soon as the distributor can obtain the required labels.

IDENTITY LABELING: "Identity", as used in this section, is defined as the name and address of the milk plant at which the pasteurization, ultra-pasteurization or aseptic processing takes place. It is recommended that the voluntary national uniform coding system for the identification of pasteurization plants at which milk and milk products are packaged, be adopted in order to provide a uniform system of codes throughout the country.

In cases where several plants are operated by one firm, the common firm name may be utilized on milk bottles or containers. *Provided*, that the location of the plant at which the contents were pasteurized, ultra-pasteurized or aseptically processed is also shown, either directly or by a code. This requirement is necessary in order to enable the regulatory agency to identify the source of the pasteurized, ultra-pasteurized or aseptically processed milk. The street

address of the plant need not be shown when only one plant of a given name is located within the municipality.

The identity labeling requirement may be interpreted as permitting plants and persons to purchase and distribute, under their own label, milk and milk products processed and packaged at another plant, provided, that the label reads, "Processed at ... (name and address)", or that the processing and packaging plant is identified by a proper code.

MISLEADING LABELS: The regulatory agency shall not permit the use of any misleading marks, words or endorsements upon the label. They may permit the use of registered trade designs or similar terms on the bottle cap or label when, in their opinion, they are not misleading and are not so used as to obscure the labeling required by the *Ordinance*. The use of super grade designations shall not be permitted. Grade designations such as "Grade AA Pasteurized", "Selected Grade A Pasteurized", "Special Grade A Pasteurized", "Premium", etc., give the consumer the impression that such a grade is significantly safer than Grade "A". Such an implication is false, because the *Ordinance* requirements for Grade "A" pasteurized, ultra-pasteurized or aseptically processed milk when properly enforced, will insure that this grade of milk will be as safe as milk can practically be made.

SECTION 5. INSPECTION OF DAIRY FARMS AND MILK PLANTS

Each dairy farm, milk plant, receiving station, milk tank truck cleaning facility and transfer station whose milk or milk products are intended for consumption within ...of...[9] or it's jurisdiction, and each bulk milk hauler/sampler who collects samples of raw milk for pasteurization, for bacterial, chemical or temperature standards and hauls milk from a dairy farm to a milk plant, receiving station or transfer station and his bulk milk pickup tank and its appurtenances shall be inspected by the regulatory agency prior to the issuance of a permit. Following the issuance of a permit, the regulatory agency shall:

1. Inspect each milk tank truck and its appurtenances used by a bulk milk hauler/sampler who collects samples of raw milk for pasteurization for bacterial, chemical or temperature standards and hauls milk from a dairy farm to a milk plant, receiving station or transfer station, at least once every 12 months;
2. Inspect each such bulk milk hauler/sampler's pickup and sampling procedures at least once every 24 months;
3. Inspect each milk plant and receiving station at least once every 3 months.
4. Inspect each milk tank truck cleaning facility and transfer station at least once every 6 months; and
5. Inspect each dairy farm at least once every 6 months.[10]

Should the violation of any requirement set forth in Section 7, or in the case of a bulk milk hauler/sampler also Section 6 and Appendix B, be found to exist on an

[9] Substitute proper legal jurisdiction here and in all similar places throughout the Ordinance.

[10] Communities and/or States desiring to inspect dairy farms under a performance-based inspection system should substitute the following language in 5. "5. Inspect each dairy farm as provided in Appendix P, Performance-Based Dairy Farm Inspection System."

inspection, a second inspection shall be required after the time deemed necessary to remedy the violation, but not before 3 days. This second inspection shall be used to determine compliance with the requirements of Section 7 or in the case of a bulk milk hauler/sampler or milk tank truck also Section 6 and Appendix B. Any violation of the same requirement of Section 7, or in the case of a bulk milk hauler/sampler or milk tank truck also Section 6 and Appendix B on such second inspection, shall call for permit suspension in accordance with Section 3 and/or court action. *Provided*, that when the regulatory agency finds that a critical processing element violation involving:

1. Proper pasteurization, whereby every particle of milk or milk product may not have been heated to the proper temperature and held for the required time in properly designed and operated equipment; or
2. A cross-connection exists whereby direct contamination of pasteurized milk or milk product is occurring; or
3. Conditions exist whereby direct contamination of pasteurized milk or milk product is occurring.

The regulatory agency shall take immediate action to prevent further movement of such milk or milk product until such violations of critical processing element(s) have been corrected. Should correction of such critical processing element(s) not be accomplished immediately, the regulatory agency shall take prompt action to suspend the permit as provided for in Section 3 of this *Ordinance*. *Provided*, that in the case of dairy plants producing aseptically processed milk and milk products, when an inspection of the dairy plant and its records reveal that the process used has been less than the required scheduled process, it shall be considered an imminent hazard to public health and the regulatory agency shall take immediate action to suspend the permit of the plant for the sale of aseptically processed milk and milk products in conformance with Section 3 of this *Ordinance*.

One copy of the inspection report shall be handed to the operator, or other responsible person or be posted in a conspicuous place on an inside wall of the establishment. Said inspection report shall not be defaced and shall be made available to the regulatory agency upon request. An identical copy of the inspection report shall be filed with the records of the regulatory agency.

Every milk producer, bulk milk hauler/sampler, milk transportation company or milk tank truck driver, distributor or plant operator shall, upon request of the regulatory agency, permit access of officially designated persons to all parts of their establishment or facilities to determine compliance with the provisions of this *Ordinance*. A distributor or plant operator shall furnish the regulatory agency, upon request, for official use only, a true statement of the actual quantities of milk and milk products of each grade purchased and sold, a list of all sources of such milk and milk products, records of inspections, tests and pasteurization time and temperature records.

It shall be unlawful for any person who, in an official capacity, obtains any information under the provisions of this *Ordinance* which is entitled to protection as a trade secret (including information as to the quantity, quality, source or disposition of milk or milk products, or results of inspections or tests thereof) to use such information to their own advantage or to reveal it to any unauthorized person.

ADMINISTRATIVE PROCEDURES

INSPECTION FREQUENCY: For the purposes of determining the inspection frequency for dairy farms and transfer stations the interval shall include the designated six month period plus the remaining days of the month in which the inspection is due.

For the purposes of determining the inspection frequency for milk plants and receiving stations the interval shall include the designated three month period plus the remaining days of the month in which the inspection is due.

One milk tank truck inspection every 12 months, or bulk milk hauler/sampler pickup and sampling procedures inspection each 24 months, or one producer inspection every 6 months or one plant inspection every 3 months is not a desirable frequency, it is instead a legal minimum. Bulk milk hauler/samplers, milk tank trucks, dairy farms and milk plants experiencing difficulty meeting requirements should be visited more frequently. Inspections of dairy farms shall be made at milking time as often as possible and of milk plants at different times of the day in order to ascertain if the processes of equipment assembly, sanitizing, pasteurization, cleaning and other procedures comply with the requirements of this *Ordinance*.

ENFORCEMENT PROCEDURES: This section provides that a dairy farm, bulk milk hauler/sampler, milk tank truck, milk tank truck driver or milk plant, except those processing aseptically processed milk and milk products, shall be subject to suspension of permit and/or court action, if two successive inspections disclose a violation of the same requirement.

Experience has demonstrated that strict enforcement of the *Ordinance* leads to a better and friendlier relationship between the regulatory agency and the milk industry than does a policy of enforcement which seeks to excuse violations and to defer penalty thereof. The sanitarian's criterion of satisfactory compliance should be neither too lenient nor unreasonably stringent. When a violation is discovered, the sanitarian should point out to the milk producer, responsible person for the milk tank truck, bulk milk hauler/sampler, milk tank truck driver or plant operator the requirement that has been violated, discuss a method for correction and set a time for correcting the violated requirement.

The penalties of suspension or revocation of permit, and/or court action, are provided to prevent continued violation of the provisions of this *Ordinance*, but are worded to protect the dairy industry against unreasonable or arbitrary action. When a condition is found which constitutes an imminent health hazard, prompt action is necessary to protect the public health; therefore, the regulatory agency is authorized, in Section 3, to suspend the permit immediately. However, except for such emergencies, no penalty is imposed on the producer, responsible person for the milk tank truck, bulk milk hauler/sampler, milk tank truck driver or distributor upon the first violation of any of the sanitation requirements listed in Section 7. A producer, milk transportation company, bulk milk hauler/sampler, milk tank truck driver or distributor found violating any requirement must be notified in writing and given a reasonable time to correct the violation(s) before a second inspection is made, but not before three days. The requirement of giving written notice shall be deemed to have been satisfied by the handing to the operator or by the posting of an inspection report, as required by this section. After receipt of a notice of violation, but before the allotted time has elapsed, the producer, milk transportation company, bulk milk

hauler/sampler, milk tank truck driver or distributor shall have an opportunity to appeal the sanitarian's interpretation to the regulatory agency or for an extension of the time allowed for correction.

ENFORCEMENT PROCEDURES--ASEPTIC PROCESSING MILK PLANTS: Because aseptically processed milk and milk products are stored at room temperature and are not refrigerated after processing they must be considered an imminent hazard to public health whenever it is revealed by an inspection or a review of the processing records that the process is less than the required scheduled process and the products produced have not maintained their commercial sterility. Prompt action by the regulatory agency to suspend the permit must be initiated in order to protect the public health. The regulatory agency shall stop the sale of all under-processed product and follow at least the minimum requirements of 21 CFR 113.89 (See Appendix L) before releasing any product.

CERTIFIED INDUSTRY INSPECTION: The regulatory agency may certify industry personnel to carry out cooperatively the provisions of this *Ordinance* with respect to the supervision of dairy farms and haulers pickup and sampling procedures. States utilizing certified industry inspections shall have on file and available for review, a written program that describes how the requirements of the PMO and related documents shall be implemented.

Reports of all inspections conducted by such personnel to determine compliance with the provisions of this *Ordinance* shall be maintained by the industry at a location acceptable to the regulatory agency. All punitive actions and all inspections for the issuance or reinstatement of permits may be performed by the Certified Industry Inspector. Initial inspections and change of market inspections are required and shall be conducted by the state regulatory agency in conjunction with the Certified Industry Inspector.

When a producer changes market, the producer records for the preceding 24 months shall be transferred with the producer (through the state regulatory agency) and will continue to be a part of the producer's record.

Industry personnel shall be certified every 3 years, by the regulatory agency.

At least annually, the Certified Industry Inspector shall attend an educational seminar provided by the State Regulatory Agency, or equivalent training acceptable to the State Regulatory Agency.

At least once in each 6 month period, the State Regulatory Agency shall inspect the records maintained by the Industry for the Certified Industry Inspection Program and conduct farm field work to assure the program meets the provisions of the State's written plan and requirements of the *Grade "A" Pasteurized Milk Ordinance* and related documents.

Initial certification by the regulatory agency shall not be made during the course of an official inspection. Re-certification by the regulatory agency may be conducted during the course of an official inspection.

Purpose of Certification--The purpose of certification is to have the applicant formally demonstrate their inspection ability to apply proper interpretations of the *Grade "A" Pasteurized Milk Ordinance*, related documents, and the agencies procedures.

Designation of Individuals to Be Certified--Candidates shall submit requests for certification to the regulatory agency. The applicant for certification shall have had experience in the field of milk sanitation, and shall be an employee of a milk plant, a producer association or officially designated laboratory or shall be employed on a consulting basis.

Recording of Qualification Data--Prior to conducting the certification procedure, background information shall be secured on the applicant. This shall include academic training, experience in milk sanitation and related fields, in-service courses attended, etc. This information is to be retained by the regulatory agency as part of the applicant's file, along with appropriate records of the applicant's performance during the certification examination.

Field Procedure--Only one applicant shall be certified at a time. The certification is to be conducted without prompting from the regulatory agency or comparison of inspection results in any way until the entire procedure is completed. Certification shall not be made during the course of an official inspection by the regulatory agency.

At least 25 randomly selected dairy farms shall be visited. After the necessary inspections have been completed, the regulatory agency shall compare their results with those of the candidate. The percentage agreement for each item of sanitation shall be determined by dividing the number of agreements by the total number of dairy farms that were inspected.

Criteria for Certification--In order to be certified, an industry inspector shall agree with the regulatory agency 80 percent of the time on individual items of sanitation and shall further agree to comply with the administrative procedures established by the regulatory agency for the program of dairy farm supervision. The regulatory agency should allow sufficient time to discuss the inspector's findings with the applicant.

Duration of Certification--Certification of industry inspection personnel shall be for a period not exceeding 3 years from the date of formal certification or re-certification unless revoked.

Re-certification--The regulatory agency shall notify the certified industry inspector of the need for certification renewal at least 60 days prior to its expiration. If re-certification is desired, the inspector will make appropriate arrangements for the renewal procedure. Re-certification can be made for the succeeding 3-year period, by following the procedures outlined above. *Provided*, that re-certification may be conducted during the course of an official inspection by the regulatory agency.

Reports and Records--Upon satisfactory completion of certification or re-certification, the certified industry inspector shall be issued a certificate. The milk plant(s) or officially designated laboratory(ies) employing the inspector shall be formally notified by letter of the certification. The letter shall outline the purpose of the certification and the conditions under which the certification may be retained. A copy of the notification letter, together with a copy of the qualification data above and a resume of the percentage agreement on individual items, shall be retained by the regulatory agency.

Revocation of Certification--The certification of an industry inspector may be revoked by the regulatory agency upon a finding that the inspector is:

1. Not in agreement with the regulatory agency at least 80 percent of the time on items of sanitation in a field examination conducted as described in the *Field Procedure* outlined above; or

2. Not complying with the established administrative procedures of the regulatory agency for the program; or

3. Failing to carry out the provisions of the *Grade "A" Pasteurized Milk Ordinance* in the course of the inspector's work.

INSPECTION REPORTS: A copy of the inspection report shall be filed as directed by the regulatory agency and retained for at least 24 months. The results shall be entered on appropriate ledger forms. The use of a computer or other information retrieval system may be used. Examples of field inspection forms are included in Appendix M.

SECTION 6. THE EXAMINATION OF MILK AND MILK PRODUCTS

It shall be the responsibility of the bulk milk hauler/sampler to collect a representative sample of milk from each farm bulk tank prior to transferring milk from a farm bulk tank, truck or other container. All samples shall be collected and delivered to a milk plant, receiving station, transfer station or other location approved by the regulatory agency.

During any consecutive six months, at least four samples of raw milk for pasteurization shall be collected, in at least four separate months, except when three months show a month containing two sampling dates separated by at least 20 days, and delivered in accordance with this section from each producer. These samples shall be obtained under the direction of the regulatory agency or shall be taken from each producer under the direction of the regulatory agency.

During any consecutive six months, at least four samples of raw milk for pasteurization, ultra-pasteurization or aseptic processing, collected in at least four separate months, except when three months show a month containing two sampling dates separated by at least 20 days, shall be taken, by the regulatory agency, from each milk plant after receipt of the milk by the plant and prior to pasteurization, ultra-pasteurization or aseptic processing.

During any consecutive six months, at least four samples of heat-treated milk products, from plants offering such products for sale, shall be collected in at least four separate months, except when three months show a month containing two sampling dates separated by at least 20 days, by the regulatory agency.

During any consecutive six months, at least four samples of pasteurized milk, flavored milk, flavored reduced fat or lowfat milk, flavored nonfat (skim) milk, each fat level of reduced fat or lowfat milk and each milk product defined in this *Ordinance*, except aseptically processed shall be collected in at least four separate months, except when three months show a month containing two sampling dates separated by at least 20 days, from every milk plant, by the regulatory agency.

Samples of milk and milk products shall be taken while in the possession of the producer or distributor at any time prior to delivery to the store or consumer. Samples of milk and milk products from dairy retail stores, food service establishments, grocery stores and other places where milk and milk products are sold shall be examined periodically as determined by the regulatory agency and the results of such examination shall be used to determine compliance with Sections 2, 4 and 10. Proprietors of such establishments shall furnish the regulatory

agency, upon request, with the names of all distributors from whom milk or milk products are obtained.

Required bacterial counts, somatic cell counts and cooling temperature checks shall be performed on raw milk for pasteurization. In addition, drug tests on each producer's milk shall be conducted at least four times during any consecutive 6 months. Required bacterial counts, drug tests, coliform determinations, phosphatase and cooling temperature checks shall be performed on pasteurized milk and milk products. Required drug residue tests shall be performed on aseptically processed milk and milk products

Whenever two of the last four consecutive bacterial counts (except those for aseptically processed milk and milk products), somatic cell count, coliform determinations, or cooling temperatures, taken on separate days, exceed the limit of the standard for the milk and/or milk products, the regulatory agency shall send a written notice thereof to the person concerned. This notice shall be in effect so long as two of the last four consecutive samples exceed the limit of the standard. An additional sample shall be taken within 21 days of the sending of such notice, but not before the lapse of 3 days. Immediate suspension of permit, in accordance with Section 3, and/or court action shall be instituted whenever the standard is violated by three of the last five bacterial counts (except those for aseptically processed milk and milk products), coliform determinations, cooling temperatures or somatic cell counts.

Whenever a phosphatase test is positive, the cause shall be determined. Where the cause is improper pasteurization, it shall be corrected and any milk or milk product involved shall not be offered for sale.

Whenever a pesticide residue test is positive, an investigation shall be made to determine the cause and the cause shall be corrected. An additional sample shall be taken and tested for pesticide residues and no milk or milk products shall be offered for sale until it is shown by a subsequent sample to be free of pesticide residues or below the actionable levels established for such residues.

Whenever a drug residue test is positive, an investigation shall be made to determine the cause, and the cause shall be corrected in accordance with the provisions of Appendix N.

Whenever a container or containers of aseptically processed milk or milk product is found to be unsterile, due to under-processing, the regulatory agency shall consider this to be an imminent hazard to public health and shall suspend the permit of the milk plant for the sale of aseptically processed milk and milk products. No aseptically processed milk and milk product shall be sold until it can be shown that the processes, equipment and procedures used are suitable for consistent production of a sterile product. All product from the lot that was found to contain one or more unsterile units shall be recalled and disposed of as directed by the regulatory agency.

Samples shall be analyzed at an official or appropriate officially designated laboratory. All sampling procedures and required laboratory examinations shall be in substantial compliance with the most current edition of *Standard Methods for the Examination of Dairy Products* of the American Public Health Association, and the most current edition of *Official Methods of Analysis of the Association of Official Analytical Chemists.* Such procedures, including the certification of sample collectors and examinations shall be evaluated in accordance with the *Evaluation of Milk Laboratories, United States Public Health Service/Food and Drug Administration*. Aseptically processed milk and milk pro-

ducts packaged in hermetically sealed containers shall be tested in accordance with the FDA's *Bacteriological Analytical Manual*. Examinations and tests to detect adulterants, including pesticides, shall be conducted as the regulatory agency requires. Assays of milk and milk products to which vitamin(s) A and/or D have been added, shall be made at least annually in a laboratory which has been accredited by the U. S. Food and Drug Administration and which is acceptable to the regulatory agency, using test methods acceptable to FDA and other official methodologies which gives statistically equivalent results to the FDA methods. Vitamin testing laboratories are accredited if they have one or more certified analysts and meet the quality control requirements of the program established by the FDA. Laboratory accreditation and analyst certification parameters are specified in the *Evaluation of Milk Laboratories* manual.

In addition, all facilities fortifying products with vitamins must keep volume control records. These volume control records must cross reference the form and amount of vitamin D, vitamin A and/or vitamin A & D used with the amount of products produced and indicate a percent of expected use, plus or minus.

ADMINISTRATIVE PROCEDURES

ENFORCEMENT PROCEDURES: All violations of bacteria, coliform, confirmed somatic cell counts and cooling temperature standards should be followed promptly by inspection to determine and correct the cause. (See Appendix E, Examples of 3-out-of-5 Compliance Enforcement Procedures).

Aseptically processed milk and milk products packaged in hermetically sealed containers are exempt from the refrigerated storage requirements of this *Ordinance*. Therefore, whenever a breakdown in the processing or packaging of these products occurs an imminent hazard to public health exists. Prompt action is needed by the regulatory agency. Dairy plants aseptically processing milk and milk products in hermetically sealed containers should be encouraged to perform bacterial and other quality tests on each lot of aseptically processed milk and milk product produced in order to ascertain that these products have been properly processed and have not been rendered non-sterile after aseptic processing and packaging. The regulatory agency may utilize industry records, of each lot of aseptically processed milk and milk products, to determine when lots can be released for sale after a violation of the bacterial standards has existed.

LABORATORY TECHNIQUES: Procedures for the collection and holding of samples; the selection and preparation of apparatus, media and reagents; and the analytical procedures, incubation, reading and reporting of results, shall be in substantial compliance with *Standard Methods for the Examination of Dairy Products and the Official Methods of Analysis*. The procedures shall be those specified therein for:

1. Standard plate count at 32°C (agar or petrifilm method).
2. Alternate methods, including Plate Loop Count with petrifilm, for viable counts for raw milk, and the petrifilm method, for pasteurized milk and milk products, at 32°C.
3. Coliform test with solid media or petrifilm method at 32°C for all milk and milk products, and Petrifilm High Sensitivity Coliform count method for all milk and milk products except unflavored whole, reduced or low fat and nonfat (skim) milk.

4. Beta lactam methods which have been independently evaluated or evaluated by FDA and have been found acceptable by FDA for detecting drug residues in raw milk, or pasteurized milk, or that particular type of pasteurized milk product at current safe or tolerance levels shall be used for each drug of concern.

Regulatory action shall be taken on all positive results (see Appendix N). A result shall be considered positive if it has been obtained by using a method which has been evaluated and deemed acceptable by FDA at levels established in memoranda transmitted periodically by FDA as required by Section III of Appendix N.

5. Screening and confirmatory methods for the detection of abnormal milk.

6. APHA or AOAC phosphatase tests.

7. Vitamin testing shall be performed using test methods acceptable to the FDA and other official methodologies which give statistically equivalent results to the FDA methods.

8. Any other tests which have been approved by the Food and Drug Administration to be equally accurate, precise and practical.

9. All standards used in the development and use of drug residue detection methods designed for PMO monitoring programs will be referenced to a United States Pharmacopeia (USP) standard when available. When a USP standard is not available, then the original method must define the standard to be used.

10. Procedural or reagent changes for official tests must be submitted to the Food and Drug Administration for acceptance prior to being used by certified NCIMS milk laboratories.

The phosphatase test is an index of the efficiency of the pasteurization process. In the event the laboratory phosphatase test is positive, the cause shall be determined immediately. Where the cause is improper pasteurization, it shall be corrected. When a laboratory phosphatase test is positive, or if any doubt should arise as to the compliance of the equipment, standards or methods outlined in Section 7., Item 16p., the regulatory agency should immediately conduct field phosphatase test at the plant (See Appendix G).

The Wisconsin Mastitis Test or California Mastitis Test may be used for screening raw goat milk samples, to indicate a range of somatic cell levels, as long as the somatic cell standard for goat milk remains 1,000,000/ml.

Any of the following confirmatory or screening tests shall be used: Direct Microscopic Somatic Cell Counting Single Strip Procedure, Electronic Somatic Cell Counting, Flow Cytometry/Opto-Electronic Somatic Cell Counting or Membrane Filter DNA Somatic Cell Counting. Pyronine Y-Methyl green stain or `New York modification' shall be used in the confirmatory test for Direct Microscopic Somatic Cell Counts in goat milk.

Laboratories using the Wisconsin Mastitis Test, Modified Whiteside or California Mastitis Test for goat milk shall confirm samples of herd milk which exceeds 18mm, or a value of one (1), respectively.

The results of the screening test or confirmatory test shall be recorded on the official records of the dairy farm and a copy of the results sent to the milk producer.

When a warning letter has been sent, because of excessively high somatic cell counts, an official inspection of the dairy should be made by regulatory personnel or certified industry personnel. This inspection should be made during milking time.

SAMPLING PROCEDURES: The *Standard Methods for the Examination of Dairy Products* contains guidance for sampling of products. See Appendix G for a

reference to drug residues in milk and the conditions under which a positive phosphatase reaction may be encountered in properly pasteurized milk or cream. See Appendix B for reference to farm bulk milk hauling programs regarding training, licensing/permitting, routine inspection and the evaluation of sampling procedures.

SECTION 7. STANDARDS FOR GRADE "A" MILK AND MILK PRODUCTS

All Grade “A” raw milk for pasteurization, ultra-pasteurization or aseptic processing and all Grade “A” pasteurized, ultra-pasteurized or aseptically processed milk and milk products shall be produced, processed and pasteurized, ultra-pasteurized or aseptically processed to conform with the following chemical, bacteriological and temperature standards and the sanitation requirements of this section.

No process or manipulation other than pasteurization, ultra-pasteurization or aseptic processing; processing methods integral therewith; and appropriate refrigeration shall be applied to milk and milk products for the purpose of removing or deactivating microorganisms. *Provided*, that in the bulk shipment of cream, nonfat (skim) milk or reduced fat or lowfat milk, the heating of the raw milk, one time, to temperatures greater than 52°C (125°F) but less than 72°C (161°F), for separation purposes, is permitted when the resulting bulk shipment(s) of cream, nonfat (skim) milk or reduced fat or lowfat milk are labeled heat-treated. In the case of heat-treated cream, the cream may be further heated to less than 75°C (166°F) in a continuing heating process and immediately cooled to 7°C (45°F) or less when necessary for enzyme deactivation (such as lipase reduction) for a functional reason.

Table 1. Chemical, Bacteriological and Temperature Standards		
GRADE "A" RAW MILK AND MILK PRODUCTS FOR PASTEURIZATION, ULTRA-PASTEURIZATION OR ASEPTIC PROCESSING	Temperature.....	Cooled to 7°C (45°F) or less within two hours after milking. *Provided*, that the blend temperature after the first and subsequent milkings does not exceed 10°C (50°F).
	Bacterial limits.....	Individual producer milk not to exceed 100,000 per ml prior to commingling with other producer milk. Not to exceed 300,000 per ml as commingled milk prior to pasteurization.
	Drugs.....	No positive results on drug residue detection methods as referenced in Section 6 - Laboratory Techniques.
	Somatic Cell Count*.....	Individual producer milk: Not to exceed 750,000 per ml.
GRADE "A" PASTEURIZED MILK AND MILK PRODUCTS AND BULK SHIPPED HEAT-TREATED MILK PRODUCTS	Temperature.....	Cooled to 7°C (45°F) or less and maintained thereat.
	Bacterial limits**.....	20,000 per ml., or gm.***
	Coliform****.....	Not to exceed 10 per ml. *Provided*, that in the case of bulk milk transport tank shipments, shall not exceed 100 per ml.
	Phosphatase****.....	Less than 350 milliunits/L for fluid products and less than 500 for other milk products by the Fluorometer or Charm ALP or equivalent.
	Drugs**.....	No positive results on drug residue detection methods as referenced in Section 6 - Laboratory Techniques which have been found to be acceptable for use with pasteurized and heat-treated milk and milk products.
GRADE "A" ASEPTICALLY PROCESSED MILK AND MILK PRODUCTS	Temperature.....	None.
	Bacterial limits.....	Refer to 21 CFR 113. 3(e)(1)*****
	Drugs**.....	No positive results on drug residue detection methods as referenced in Section 6 - Laboratory Techniques which have been found to be acceptable for use with aseptically processed milk and milk products.

* Goat Milk 1,000,000
** Not applicable to cultured products.
*** Results of the analysis of dairy products which are weighed in order to be analyzed will be reported in # per gm (See the current edition of the *Standard Methods for the Examination of Dairy Products*).
**** Not applicable to bulk shipped heat-treated milk products.
***** 21 CFR 113.3(e)(1) contains the definition of "COMMERCIAL STERILITY"

STANDARDS FOR GRADE "A" RAW MILK FOR PASTEURIZATION, ULTRA-PASTEURIZATION OR ASEPTIC PROCESSING

ITEM 1r. ABNORMAL MILK

Lactating animals which show evidence of the secretion of abnormal milk in one or more quarters, based upon bacteriological, chemical or physical examination, shall be milked last or with separate equipment and the milk shall be discarded. Lactating animals treated with, or lactating animals which have consumed chemical, medicinal or radioactive agents which are capable of being secreted in the milk and which, in the judgement of the regulatory agency, may be deleterious to human health, shall be milked last or with separate equipment and the milk disposed of as the regulatory agency may direct.

PUBLIC-HEALTH REASON

The health of lactating animal is a very important consideration because a number of diseases of lactating animals, including salmonellosis, staphylococcal infection and streptococcal infection, may be transmitted to man through the medium of milk. The organisms of most of these diseases may get into the milk either directly from the udder or indirectly through infected body discharges which may drop, splash or be blown into the milk.

Bovine mastitis is an inflammatory and, generally, highly communicable disease of the bovine udder. Usually, the inciting organism is a streptococcus of bovine origin (type B), but the disease is often caused by a staphylococcus or other infectious agent. Occasionally lactating animal's udders become infected with hemolytic streptococci of human origin, which may result in milk-borne epidemics of scarlet fever or septic sore throat. The toxins of staphylococci, and possibly other organisms in milk, may cause severe gastroenteritis. Some of these toxins are not destroyed by pasteurization.

ADMINISTRATIVE PROCEDURES

This item is deemed to be satisfied when:

1. Milk from lactating animals being treated with medicinal agents, which are capable of being secreted in the milk, is not offered for sale for such a period as is recommended by the attending veterinarian or as indicated on the package label of the medicinal agent.
2. Milk from lactating animals treated with or exposed to insecticides, not approved for use on dairy animals by the U.S. Environmental Protection Agency, is not offered for sale.
3. The regulatory agency requires such additional tests for the detection of abnormal milk as they deem necessary.
4. Bloody, stringy, off-colored milk, or milk that is abnormal to sight or odor, is so handled and disposed of as to preclude the infection of other lactating animals and the contamination of milk utensils.
5. Lactating animal secreting abnormal milk are milked last or in separate equipment which effectively prevents the contamination of the wholesome supply. Abnormal milking equipment is maintained clean to reduce the possibility of re-infecting or cross infection of the dairy animal.
6. Equipment, utensils and containers used for the handling of abnormal milk are not used for the handling of milk to be offered for sale, unless they are first cleaned and effectively sanitized.

7. Processed animal waste derivatives, used as a feed ingredient for any portion of the total ration of the lactating dairy animal, have been:

a. Properly processed in accordance with at least those requirements contained in the Model Regulations for Processed Animal Wastes developed by the Association of American Feed Control Officials; and

b. Do not contain levels of deleterious substances, harmful pathogenic organisms or other toxic substances which are secreted in the milk at any level which may be deleterious to human health.

8. Unprocessed poultry litter and unprocessed recycled animal body discharges are not fed to lactating dairy animals.

ITEM 2r. MILKING BARN, STABLE OR PARLOR--CONSTRUCTION

A milking barn, stable or parlor shall be provided on all dairy farms in which the milking herd shall be housed during milking time operations. The areas used for milking purposes shall:

1. Have floors constructed of concrete or equally impervious materials. *Provided*, convalescent (maternity) pens located in milking areas of stanchion-type barns may be used when they comply with the guidelines specified in Appendix C.III.

2. Have walls and ceilings which are smooth, painted or finished in an approved manner; in good repair; ceiling dust-tight;

3. Have separate stalls or pens for horses, calves and bulls, and not be overcrowded;

4. Be provided with natural and/or artificial light, well distributed, for day and/or night milking;

5. Provide sufficient air space and air circulation to prevent condensation and excessive odors;

PUBLIC-HEALTH REASON

When milking is done elsewhere than in a suitable place provided for this purpose, the milk may be contaminated. Floors constructed of concrete or other impervious materials can be kept clean more easily than floors constructed of wood, earth or similar materials and are; therefore, more apt to be kept clean. Painted, or properly finished walls and ceilings encourage cleanliness. Tight ceilings reduce the likelihood of dust and extraneous material getting into the milk. Adequate light makes it more probable that the barn will be clean and that the lactating animals will be milked in a sanitary manner.

ADMINISTRATIVE PROCEDURES

This item is deemed to be satisfied when:

1. A milking barn, stable or parlor is provided on all dairy farms.

2. Gutters, floors and feed troughs are constructed of good quality concrete or equally impervious material. Floors shall be easily cleaned (brushed surfaces permitted), be graded to drain, maintained in good repair and free of excessive breaks or worn areas that may create pools.

3. Gravity flow manure channels in milking barns, if used, shall be constructed in accordance with the specifications of Appendix C. II or acceptable to the state regulatory agency.

4. Stall barns, when used with gutter grates over manure storage pits, are designed and constructed in accordance with the specifications of Appendix C IV. or acceptable to the state regulatory agency.

5. Walls and ceilings are finished with wood, tile, smooth-surfaced concrete, cement plaster, brick or other equivalent materials with light colored surfaces. Walls, partitions, doors, shelves, windows and ceilings shall be kept in good repair, and surfaces shall be refinished whenever wear or discoloration is evident.

Whenever feed is stored overhead, ceilings shall be constructed to prevent the sifting of chaff and dust into the milking barn, stable or parlor. If a hay opening is provided from a loft which is open into the milking portion of the barn, such openings shall be provided with a dust-tight door which shall be kept closed during milking operations.

6. Bull pens, maternity and calf stalls and horse stalls are partitioned from the milking portion of the barn. Such portions of the barn that are not separated by tight partitions shall comply with all the requirements of this item.

7. Overcrowding is not evidenced by the presence of calves, lactating animals or other barnyard animals in walks or feed alleys. Inadequate ventilation and excessive odors may also be evidence of an overcrowded barn.

8. The milking barn is provided with natural and/or artificial light to insure that all surfaces and particularly the working areas will be plainly visible. The equivalent of at least 10 foot-candles of light in all working areas shall be provided.

9. Air circulation is sufficient to minimize odors and to prevent condensation upon walls and ceilings.

10. A dust-tight partition, provided with doors that are kept closed except when in actual use, shall separate the milking portion of the barn from any feed room or silo in which feed is ground or mixed, or in which sweet feed is stored.

When conditions warrant, the regulatory agency may approve a barn without four walls extending from floor to roof, or a shed-type barn provided the requirement of Item 3r., prohibiting animals and fowl from entering the barn is satisfied.

ITEM 3r. MILKING BARN, STABLE OR PARLOR--CLEANLINESS

The interior shall be kept clean. Floors, walls, ceilings, windows, pipelines and equipment shall be free of filth and/or litter and shall be clean. Swine and fowl shall be kept out of the milking area.

Feed shall be stored in a manner that will not increase the dust content of the air or interfere with the cleaning of the floor.

Surcingles, milk stools and antikickers shall be kept clean and stored above the floor.

PUBLIC-HEALTH REASON

A clean interior reduces the chances of contamination of the milk or milk pails during milking. The presence of other animals increases uncleanliness and the potential for the spread of disease.

Clean milk stools and surcingles (or belly straps) reduce the likelihood of contamination of milker's hands between the milking of one lactating animal and the milking of another.

ADMINISTRATIVE PROCEDURES

This item is deemed to be satisfied when:

1. The interior of the milking barn, stable or parlor is kept clean.
2. Leftover feed in feed mangers appears fresh and is not wet or soggy.
3. The bedding material, if used, does not contain more manure than has accumulated since the previous milking.

4. Outside surfaces of pipeline systems located in the milking barn, stable or parlor are reasonably clean.

5. Gutter cleaners are reasonably clean.

6. All pens, calf stalls and bull pens, if not separated from the milking barn, stable or parlor, are clean.

7. Swine and fowl are kept out of the milking area.

8. Milk stools are not padded and are constructed to be easily cleaned. Milk stools, surcingles and antikickers are kept clean and are stored above the floor in a clean place in the milking barn, stable parlor or milkhouse, when not in use.

9. Gravity flow manure channels in milking barns, if used, shall be maintained in accordance with Appendix C. II.

10. Stall barns, when used with gutter grates over manure storage pits, are operated and maintained in accordance with the specifications of C. IV.

The method of cleaning is immaterial. Dairymen whose barns are provided with water under pressure should scrub the floors after each milking with a stiff-bristled brush. In barns in which water under pressure is not available, the floors may be brushed dry and limed. In the latter event, care should be exercised to prevent caking of the lime. When lime or phosphate is used, it shall be spread evenly on the floor as a thin coating. If clean floors are not maintained by this method, the sanitarian should require cleaning with water.

ITEM 4r. COWYARD

The cowyard shall be graded and drained and shall have no standing pools of water or accumulations of organic wastes. *Provided*, that in loafing or lactating animal-housing areas, lactating animal droppings and soiled bedding shall be removed, or clean bedding added, at sufficiently frequent intervals to prevent the soiling of the lactating animal's udder and flanks. Waste feed shall not be allowed to accumulate. Manure packs shall be properly drained and shall provide a reasonably firm footing. Swine shall be kept out of the cowyard.

PUBLIC-HEALTH REASON

The cowyard is interpreted to be that enclosed or unenclosed area in which the lactating animals are apt to congregate, approximately adjacent to the barn, including animal-housing areas. This area is; therefore, particularly apt to become filthy with manure droppings, which may result in the soiling of the lactating animal's udders and flanks. The grading and drainage of the cowyard, as far as are practicable, are required because wet conditions are conducive to fly breeding and make it difficult to keep manure removed and the lactating animals clean. If manure and barn sweepings are allowed to accumulate in the cowyard, fly breeding will be promoted, and the lactating animals, because of their habit of lying down, will be more apt to have manure-soiled udders. Lactating animals should not have access to piles of manure, in order to avoid the soiling of udders and the spread of diseases among dairy animals.

ADMINISTRATIVE PROCEDURES

This item is deemed to be satisfied when:

1. The cowyard, which is the enclosed or unenclosed area adjacent to the milking barn in which the lactating animals may congregate, including animal-housing areas and feed lots, is graded and drained, depressions and soggy areas are filled, and lactating animal's lanes are reasonably dry.

2. Approaches to the barn door and the surroundings of stock watering and feed

stations are solid to the footing of the animals.

3. Wastes from the barn or milkhouse are not allowed to pool in the cowyard. Cowyards which are muddy due to recent rains should not be considered as violating this item.

4. Manure, soiled bedding and waste feed are not stored or permitted to accumulate therein in such a manner as to permit the soiling of cow's udders and flanks. Animal-housing areas (stables without stanchions, such as loose-housing stables, pen stables, resting barns, holding barns, loafing sheds, wandering sheds, free-stall housing) shall be considered as part of the cowyard. Manure packs shall be solid to the footing of the animals (See Appendix C).

5. Cowyards are kept reasonably free of animal droppings. Animal droppings shall not be allowed to accumulate in piles that are accessible to the animals.

ITEM 5r. MILKHOUSE OR ROOM--CONSTRUCTION AND FACILITIES

A milkhouse or room of sufficient size shall be provided, in which the cooling, handling and storing of milk and the washing, sanitizing and storing of milk containers and utensils shall be conducted. Except as provided for in Item 12r. of this section.

The milkhouse shall be provided with a smooth floor constructed of concrete or equally impervious material, graded to drain and maintained in good repair. Liquid waste shall be disposed of in a sanitary manner. Floor drains shall be accessible and shall be trapped if connected to a sanitary sewer system.

The walls and ceilings shall be constructed of smooth material, be in good repair and be well painted, or finished in an equally suitable manner.

The milkhouse shall have adequate natural and/or artificial light and be well ventilated.

The milkhouse shall be used for no other purpose than milkhouse operations. There shall be no direct opening into any barn, stable or parlor or into a room used for domestic purposes. *Provided*, that a direct opening between the milkhouse and milking barn, stable or parlor is permitted when a tight-fitting, self-closing, solid door (s) hinged to be single or double acting is provided. Screened vents in the wall between the milkhouse and a breezeway, which separates the milkhouse from the milking parlor, are permitted, provided animals are not housed within the milking facility.

Water under pressure shall be piped into the milkhouse.

The milkhouse shall be equipped with a two-compartment wash vat and adequate hot water heating facilities.

A transportation tank may be used for the cooling and/or storage of milk on the dairy farm. Such tank shall be provided with a suitable shelter for the receipt of milk. Such shelter shall be adjacent to, but not a part of, the milkroom and shall comply with the requirements of the milkroom with respect to construction items, lighting, drainage, insect and rodent control and general maintenance. In addition, the following minimum criteria shall be met:

1. An accurate, accessible temperature recording device shall be installed in the milk line downstream from an effective cooling device which cools the milk to 7° C (45° F) or less.
2. The milk shall be sampled at the direction of the regulatory agency in a manner so as to preclude contaminating the tanker or sample, by an acceptable milk sample collector.

3. The milk tank truck shall be effectively agitated in order to collect a representative sample.

When the regulatory agency determines conditions exist whereby the milk tank truck can be adequately protected and sampled without contamination, a shelter need not be provided if the following minimum criteria are met:

1. The milk hose connection is accessible to, and made from within, the milkroom. The milk hose connection to the milk tank truck is completely protected from the outside environment at all times.
2. To assure continued protection of the milk, the milk tank truck manhole must be sealed after the truck has been cleaned and sanitized.
3. The milk tank truck shall be washed and sanitized at the dairy plant receiving the milk or at a wash station acceptable to the regulatory agency.
4. To prevent overflow from the milk tank truck which would create unsanitary conditions around the milk house, the milk tank truck shall be equipped with a liquid level sensor device of sanitary design. The sensor device shall deactivate the milk pump or sound an alarm when activated.
5. An accurate, accessible temperature recording device shall be installed in the milk line downstream from an effective cooling device which cools the milk to below 7°C (45°F).
6. The milk shall be sampled at the direction of the regulatory agency, in a manner so as to preclude contaminating the milk tank truck or sample, by a permitted milk sample collector, or the equivalent. The milk in the milk tank truck shall be effectively agitated in order to collect a representative sample.
7. The milk tank truck shall be parked on a self-draining concrete or equally impervious surface during filling and storage.

PUBLIC-HEALTH REASON

Unless a suitable, separate place is provided for the cooling, handling and storing of milk and for the washing, sanitizing and storage of milk utensils, the milk or the utensils may become contaminated. Construction which permits easy cleaning promotes cleanliness. A well drained floor of concrete or other impervious material promotes cleanliness. Ample light promotes cleanliness, and proper ventilation reduces the likelihood of odors and condensation. A well equipped milkhouse which is separated from the barn, stable or parlor and the living quarters provides a safeguard against the exposure of milk and milk utensils to infection from persons, other than regular milk handlers, and from insects and dust.

ADMINISTRATIVE PROCEDURES

This item is deemed to be satisfied when:

1. A separate milkhouse of sufficient size is provided for the cooling, handling and storing of milk and the washing, sanitizing and storing of milk containers and utensils. Except as provided for in Item 12r. of this section.

2. The floors of all milkhouses are constructed of good quality concrete (float finish permissible), or equally impervious tile, or brick laid closely with impervious material, or metal surfacing with impervious joints or other material the equivalent of concrete and maintained free of breaks, depressions and surface peelings.

3. The floor slopes to drain so that there are no pools of standing water. The joints between the floor and the walls shall be watertight.

4. The liquid wastes are disposed of in a sanitary manner. All floor drains are accessible and are trapped if connected to a sanitary sewer.

5. Walls and ceilings are constructed of smooth dressed lumber or similar material; well painted with a light-colored washable paint; and are in good repair. Surfaces and joints shall be tight and smooth. Sheet metal, tile, cement block, brick, concrete, cement plaster or similar materials of light color may be used and the surfaces and joints shall be smooth.

6. A minimum of 20 foot-candles of light is provided at all working areas from natural and/or artificial light for milkhouse operations.

7. The milkhouse is adequately ventilated to minimize condensation on floors, walls, ceilings and clean utensils.

8. Vents, if installed, and lighting fixtures are installed in a manner to preclude the contamination of bulk milk tanks or clean utensil storage areas.

9. The milkhouse is used for no other purpose than milkhouse operations.

10. There is no direct opening into any barn, stable or parlor or room used for domestic purposes. Except that an opening between the milkhouse and milking barn, stable or parlor is permitted when a tight-fitting, self-closing, solid door(s) hinged to be single or double acting is provided. Except that screened vents are permitted in the wall between the milkhouse and a breezeway, which separates the milkhouse from the milking parlor, provided animals are not housed within the milking facility.

11. A vestibule, if used, complies with the applicable milkhouse construction requirements.

12. The transfer of milk from a bulk-holding cooling tank to a transport tank is through a hose port located in the milkhouse wall. The port shall be fitted with a tight door, which shall be in good repair. It shall be kept closed except when the port is in use. An easily cleanable surface shall be constructed under the hose port, adjacent to the outside wall and sufficiently large to protect the milk hose from contamination.

13. Water under pressure is piped into the milkhouse.

14. Each milkhouse is provided with facilities for heating water in sufficient quantity and to such temperatures for the effective cleaning of all equipment and utensils (See Appendix C).

15. The milkhouse is equipped with a wash-and-rinse vat having at least two compartments. Each compartment must be of sufficient size to accommodate the largest utensil or container used. The upright wash vat for milk pipelines and milk machines may be accepted as one part of the two-compartment vat. *Provided*, that the stationary wash rack, in or on the vat, and the milking machines inflations and appurtenances are completely removed from the vat during the washing, rinsing and/or sanitizing of other utensils and equipment. Where mechanical cleaning/recirculated systems eliminate the need for handwashing of equipment, the presence of the second wash vat compartment may be optional, if so determined by the State Regulatory Agency, on an individual farm basis.

16. A transportation tank, with or without overhead protection may be used for cooling and storing milk on a dairy farm. If a suitable shelter is provided for a transportation truck used for cooling and storing milk, such shelter shall be adjacent to, but not a part of, the milkroom and shall comply with the prerequisites of the milkroom with respect to construction items, lighting, drainage, insect and rodent control

and general maintenance. See Appendix C for suggested plans and information on size, construction, operation and maintenance of milkhouses. In addition, the following minimum criteria shall be met:

1. An accurate, accessible temperature recording device shall be installed in the milk line downstream from an effective cooling device which cools the milk to 7°C (45° F) or less.

2. The milk shall be sampled at the direction of the regulatory agency in a manner so as to preclude contaminating the milk tank truck or sample, by an acceptable milk sample collector.

3. The milk tank truck shall be effectively agitated in order to collect a representative sample.

When the regulatory agency determines conditions exist whereby the milk tank truck can be adequately protected and sampled without contamination, a shelter need not be provided if the following minimum criteria are met:

1. The milk hose connection is accessible to, and made from within, the milkroom. The milk hose connection to the milk tank truck is completely protected from the outside environment at all times.

2. To assure continued protection of the milk, the milk tank truck manhole must be sealed after the truck has been cleaned and sanitized.

3. The milk tank truck shall be washed and sanitized at the dairy plant receiving the milk or at a wash station acceptable to the regulatory agency.

4. To prevent overflow from the milk tank truck which would create unsanitary conditions around the milk house, the milk tank truck shall be equipped with a liquid level sensor device of sanitary design. The sensor device shall deactivate the milk pump or sound an alarm when activated.

5. An accurate, accessible temperature recording device shall be installed in the milk line downstream from an effective cooling device which cools the milk to below 7°C (45° F).

6. The milk shall be sampled at the direction of the regulatory agency, in a manner so as to preclude contaminating the milk tank truck or sample, by a permitted milk sample collector, or the equivalent. The milk in the milk tank truck shall be effectively agitated in order to collect a representative sample.

7. The milk tank truck shall be parked on a self-draining concrete or equally impervious surface during filling and storage.

ITEM 6r. MILKHOUSE OR ROOM--CLEANLINESS

The floors, walls, ceilings, windows, tables, shelves, cabinets, wash vats, non-product-contact surfaces of milk containers, utensils and equipment and other milkroom equipment shall be clean. Only articles directly related to milkroom activities shall be permitted in the milkroom. The milkroom shall be free of trash, animals and fowl.

PUBLIC-HEALTH REASON

Cleanliness in the milkroom reduces the likelihood of contamination of the milk.

ADMINISTRATIVE PROCEDURES

This item is deemed to be satisfied when:

1. The milkroom structure, equipment and other milkroom facilities used in its operation or maintenance are clean at all times.

2. Incidental articles such as desks, refrigerators, and storage cabinets may be in the milkroom provided they are kept clean

and ample space is available to conduct the normal operations in the milkroom and will not cause contamination of the milk.

3. Vestibules, if provided, are kept clean.

4. Animals and fowl are kept out of the milkroom.

ITEM 7r. TOILET

Every dairy farm shall be provided with one or more toilets, conveniently located, properly constructed, operated and maintained in a sanitary manner. The waste shall be inaccessible to flies and shall not pollute the soil surface or contaminate any water supply.

PUBLIC-HEALTH REASON

The organisms of typhoid fever, dysentery and gastrointestinal disorders may be present in the body wastes of persons who have these diseases. In the case of typhoid fever, well persons (carriers) also may discharge the organisms in their body wastes. If a toilet is not fly-tight and so constructed as to prevent overflow, infection may be carried from the excreta to the milk, either by flies or through the pollution of ground water supplies or streams to which the lactating animals have access.

ADMINISTRATIVE PROCEDURES

This item is deemed to be satisfied when:

1. There is at least one flush toilet connected to a public sewer system or to an individual sewage-disposal system or a chemical toilet, earth pit privy or other type of privy. Such sewage systems shall be constructed and operated in accordance with the standards outlined in Appendix C, or when a state or local regulatory agency has more effective standards designed specifically for that region, these standards may apply, provided, that there is no mixing of animal and human waste..

2. A toilet or privy is convenient to the milking barn and the milkroom. There shall be no evidence of human defecation or urination about the premises.

3. No privy opens directly into the milkroom.

4. The toilet room, including all fixtures and facilities, is kept clean and free of flies and odors.

5. Where flush toilets are used, doors to toilet rooms are tight and self-closing. All outer openings in toilet rooms shall be screened or otherwise protected against the entrance of flies.

6. Vents of earth pits are screened.

ITEM 8r. WATER SUPPLY

Water for milkhouse and milking operations shall be from a supply properly located, protected and operated and shall be easily accessible, adequate and of a safe, sanitary quality.

PUBLIC-HEALTH REASON

A dairy farm water supply should be accessible in order to encourage its use in ample quantity in cleaning operations; it should be adequate so that cleaning and rinsing will be thorough; and it should be of a safe, sanitary quality in order to avoid contamination of milk utensils.

A polluted water supply, used in the rinsing of the dairy utensils and containers, may be more dangerous than a similar water supply which is used for drinking purposes only. Bacteria grow much faster in milk than in water and the severity of an attack of a given disease depends largely upon the size of the dose of disease organisms taken into the system. Therefore, a small number

of disease organisms consumed in a glass of water from a polluted well may possibly result in no harm; whereas, if left in a milk utensil, which has been rinsed with the water, they may after several hours growth, in the milk, increase in such numbers as to cause disease when consumed.

ADMINISTRATIVE PROCEDURES

This item is deemed to be satisfied when:

1. The water supply for milkhouse and milking operations is approved as safe by the State water control authority and, in the case of individual water systems, complies with the specifications outlined in Appendix D, and the bacteriological standards outlined in Appendix G.

2. No cross-connection exists between a safe water supply and any unsafe or questionable water supply or any other source of pollution.

3. There are no submerged inlets through which a safe water supply may be contaminated.

4. The well or other source of water is located and constructed in such a manner that neither under-ground nor surface contamination from any sewerage systems, privy or other source of pollution can reach such water supply.

5. New individual water supplies and water supply systems which have been repaired or otherwise become contaminated are thoroughly disinfected before being placed in use (See Appendix D). The supply shall be made free of the disinfectant by pumping to waste before any sample for bacteriological testing shall be collected.

6. All containers and tanks used in the transportation of water are sealed and protected from possible contamination. These containers and tanks shall be subjected to a thorough cleaning and a bacteriological treatment prior to filling with potable water to be used at the dairy farm. To minimize the possibility of contamination of the water during its transfer from the potable tanks to the elevated or ground-water storage at the dairy farm, a suitable pump, hose and fittings shall be provided. When the pump, hose and fittings are not being used, the outlets shall be capped and stored in a suitable dust-proof enclosure so as to prevent their contamination. The storage tank at the dairy farm shall be constructed of impervious material, provided with a dust and rainproof cover and also provided with an approved-type vent and roof hatch. All new reservoirs or reservoirs which have been cleaned shall be disinfected prior to placing them into service (See Appendix D).

7. Samples for bacteriological examination are taken upon the initial approval of the physical structure, based upon the requirements of this *Ordinance*, when any repair or alteration of the water supply system has been made and at least every 3 years. *Provided*, that water supplies with buried well casing seals, installed prior to the adoption of this section, shall be tested at intervals no greater than 6 months apart. Whenever such samples indicate either the presence of bacteria of the coliform group or whenever the well casing, pump or seal need replacing or repair, the well casing and seal shall be brought above the ground surface and shall comply with all other applicable construction criteria of this section. *Provided*, that when water is hauled to the dairy farm, such water shall be sampled for bacteriological examination at the point of use and submitted to a laboratory at least four times in separate months during any consecutive six months. Bacteriological examinations shall be conducted in a laboratory acceptable to the regulatory agency. To determine if water samples have been taken at the frequency

established in this section, the interval shall include the designated period plus the remaining days of the month in which the sample is due.

8. Current records of water test results shall be retained on file with the regulatory agency or as the regulatory agency directs.

ITEM 9r. UTENSILS AND EQUIPMENT--CONSTRUCTION

All multi-use containers, equipment and utensils used in the handling, storage or transportation of milk shall be made of smooth, nonabsorbent, corrosion-resistant, nontoxic materials, and shall be so constructed as to be easily cleaned. All containers, utensils and equipment shall be in good repair. Multiple-use woven material shall not be used for straining milk. All single-service articles shall have been manufactured, packaged, transported and handled in a sanitary manner and shall comply with the applicable requirements of Item 11p of this section. Articles intended for single-service use shall not be reused.

Farm holding/cooling tanks, welded sanitary piping and transportation tanks shall comply with the applicable requirements of Items 10p and 11p of this section.

PUBLIC-HEALTH REASON

Milk containers and other utensils without flush joints and seams, without smooth, easily cleaned, and accessible surfaces, and not made of durable, non-corrodible material, are apt to harbor accumulations in which undesirable bacterial growth is supported. Single-service articles which have not been manufactured and handled in a sanitary manner may contaminate the milk.

ADMINISTRATIVE PROCEDURES

This item is deemed to be satisfied when:

1. All multi-use containers, equipment and utensils, which are exposed to milk or milk products, or from which liquids may drip, drain or be drawn into milk or milk products, are made of smooth impervious, nonabsorbent, safe materials of the following types:

a. Stainless steel of the AISI (American Iron and Steel Institute) 300 series; or

b. Equally corrosion-resistant, nontoxic metal; or

c. Heat-resistant glass; or

d. Plastic or rubber and rubber-like materials which are relatively inert, resistant to scratching, scoring, decomposition, crazing, chipping and distortion, under normal use conditions; are nontoxic, fat resistant, relatively nonabsorbent, relatively insoluble, do not release component chemicals or impart flavor or odor to the product; and which maintain their original properties under repeated use conditions.

2. Single-service articles have been manufactured, packaged, transported and handled in a sanitary manner and comply with the applicable requirements of Item 11p.

3. Articles intended for single-service use are not reused.

4. All containers, equipment and utensils are free of breaks and corrosion.

5. All joints in such containers, equipment and utensils are smooth and free from pits, cracks or inclusions.

6. Mechanically cleaned milk pipelines and return-solution lines are self-draining. If gaskets are used, they shall be self-positioning and of material meeting specifications described in 1. d. above, and

shall be of such design, finish and application as to form a smooth, flush, interior surface. If gaskets are not used, all fittings shall have self-positioning faces designed to form a smooth, flush, interior surface. All interior surfaces of welded joints in pipelines shall be smooth and free of pits, cracks and inclusions.

7. Detailed plans for mechanically cleaned pipeline systems are submitted to the regulatory agency for written approval prior to installation. No alteration or addition shall be made to any milk pipeline system without prior written approval of the regulatory agency.

8. Strainers, if used, are of perforated metal design, or so constructed as to utilize single-service strainer media.

9. All milking machines, including heads, milk claws, milk tubing and other milk-contact surfaces can be easily cleaned and inspected. Pipelines, milking equipment and appurtenances which require a screw driver or special tool shall be considered easily accessible for inspection, providing the necessary tools are available at the milkhouse.

10. Milk cans have umbrella-type lids.

11. Farm holding/cooling tanks, welded sanitary piping and transportation tanks comply with the applicable requirements of Items 10p and 11p of this section.

12. During filling, flexible plastic/rubber hoses may be used between the fill valves of bottom fill bulk milk storage tanks, when needed for functional purposes. Such hoses shall be drainable, be as short as practical, have sanitary fittings, and be supported to maintain uniform slope and alignment. The end fittings of such hoses shall be permanently attached in such a manner that will assure a crevice-free joint between the hose and the fitting, which can be cleaned by mechanical means. The hoses shall be included as part of a mechanical cleaning system.

NOTE: 3-A Standards: 3-A Sanitary Standards for dairy equipment are promulgated jointly by the Sanitary Standards Subcommittee of the Dairy Industry Committee, the Committee on Sanitary Procedure of the International Association for Food Protection and the Milk Safety Branch, Food and Drug Administration, Public Health Service, Center for Food Safety and Applied Nutrition, Department of Health and Human Services. Equipment manufactured in conformity with 3-A Sanitary Standards complies with the sanitary design and construction standards of the *Ordinance*.

ITEM 10r. UTENSILS AND EQUIPMENT--CLEANING

The product-contact surfaces of all multi-use containers, equipment and utensils used in the handling, storage or transportation of milk shall be cleaned after each usage.

PUBLIC-HEALTH REASON

Milk cannot be kept clean or free of contamination if permitted to come into contact with unclean containers, utensils or equipment.

ADMINISTRATIVE PROCEDURES

This item is deemed to be satisfied when:

1. There shall be a separate wash manifold for all mechanically cleaned milk pipelines in all new or extensively remodeled facilities.

2. The product-contact surface of all multi-use containers, equipment and utensils

used in the handling, storage or transportation of milk are cleaned after each milking or once every 24 hours for continuous operations.

3. There shall be no partial removal of milk from milk storage/holding tanks by the bulk milk hauler/sampler, except partial pickups may be permitted when the milk storage/holding tank is equipped with a seven-day recording device complying with the specifications of Appendix H or other recording device acceptable to the state regulatory agency provided the milk storage/holding tank shall be clean and sanitized when empty and shall be emptied at least every 72 hours. In the absence of a temperature recording device, partial pickups may be permitted as long as the milk storage/holding tank is completely empty, clean and sanitized prior to the next milking. In the event of an emergency situation, such as in inclement weather, natural disaster, et cetera, a variance may be permitted at the discretion of the state regulatory agency.

ITEM 11r. UTENSILS AND EQUIPMENT--SANITIZATION

The product-contact surfaces of all multi-use containers, equipment and utensils used in the handling, storage or transportation of milk shall be sanitized before each usage.

PUBLIC-HEALTH REASON

Mere cleaning of containers, equipment and utensils does not insure the removal or destruction of all disease organisms which may have been present. Even very small numbers remaining may grow to dangerous proportions, since many kinds of disease bacteria grow rapidly in milk. For this reason, all milk containers, equipment and utensils must be treated with an effective sanitizer before each usage.

ADMINISTRATIVE PROCEDURES

This item is deemed to be satisfied when:

All product-contact surfaces of multi-use containers, utensils and equipment used in the handling, storage or transportation of milk are sanitized before each usage by one of the following methods, or by any method which has been demonstrated to be equally effective:

1. Complete immersion in hot water at a temperature of at least 77°C (170°F) for at least 5 minutes; or exposure to a flow of hot water at a temperature of at least 77°C (170°F), as determined by the use of a suitable accurate thermometer (at the outlet), for at least 5 minutes.
2. Certain chemical compounds are effective for the sanitization of milk utensils, containers, and equipment. These are contained in 21 CFR 178.1010. and shall be used in accordance with label directions. (See Appendix F, for further discussion of approved sanitizing procedures).

ITEM 12r. UTENSILS AND EQUIPMENT--STORAGE

All containers, utensils and equipment used in the handling, storage or transportation of milk, unless stored in sanitizing solutions, shall be stored to assure complete drainage and shall be protected from contamination prior to use. *Provided*, that pipeline milking equipment such as milker claws, inflations, weigh jars, meters, milk hoses, milk receivers, tubular coolers, plate coolers and milk pumps which are designed for mechanical cleaning and other equipment, as accepted by FDA which

meets these criteria, may be stored in the milking barn or parlor, provided this equipment is designed, installed and operated to protect the product and solution-contact surfaces from contamination at all times.

PUBLIC-HEALTH REASON

Careless storage of milk utensils which previously have been properly treated is apt to result in recontamination of such utensils, thus rendering them unsafe.

ADMINISTRATIVE PROCEDURES

This item is deemed to be satisfied when:

1. All milk containers, utensils and equipment, including milking machine vacuum hoses, are stored in the milkhouse in a sanitizing solution, or on racks, until used. Pipeline milking equipment such as milker claws, inflations, weight jars, milk hoses, milk receivers, tubular coolers, plate coolers and milk pumps which are designed for mechanical cleaning and other equipment, as accepted by FDA which meets these criteria, may be mechanically cleaned, sanitized and stored in the milking barn or parlor, provided this equipment is designed, installed and operated to protect the product- and solution-contact surface from contamination at all times. Some of the parameters to be considered in determining protection are: proper location of equipment; proper drainage of equipment; and adequate and properly located lighting and ventilation. The milking barn or parlor must be used only for milking. Concentrates may be fed in the barn during milking but the barn shall not be used for the housing of animals. When manual cleaning of product-contact surfaces is necessary, the cleaning shall be done in the milkhouse.

2. Means are provided to effect complete drainage of equipment when such equipment cannot be stored to drain freely.

3. Clean cans or other containers are stored in the milkhouse within a reasonable time after delivery to the dairy farm.

4. Strainer pads, parchment papers, gaskets and similar single-service articles are stored in a suitable container or cabinet and protected against contamination and in a location convenient to their use.

ITEM 13r. MILKING--FLANKS, UDDERS AND TEATS

Milking shall be done in the milking barn, stable or parlor. The flanks, udders, bellies and tails of all milking lactating animals shall be free from visible dirt. All brushing shall be completed prior to milking. The udders and teats of all milking lactating animals shall be clean and dry before milking. Teats shall be treated with a sanitizing solution just prior to the time of milking and shall be dry before milking. Wet hand milking is prohibited.

PUBLIC-HEALTH REASON

If milking is done elsewhere other than in a suitable place provided for this purpose, the milk may become contaminated. Cleanliness of the lactating animals is one of the most important factors affecting the bacterial count of the milk. Under usual farm conditions, lactating animals contaminate their udders by standing in polluted water or by lying down in the pasture or cowyard. Unless the udders and teats are clean and dry before milking, particles of filth or contaminated water are apt to drop or be drawn into the milk. Such contamination of the milk is particularly dangerous because manure may contain the organisms of brucellosis and tuberculosis, and polluted water may contain

the organisms of typhoid fever and other intestinal diseases. Application of sanitizing solutions to the teats followed by thorough drying just prior to the time of milking has the advantage of giving an additional margin of safety with reference to such disease organisms as are not removed by ordinary cleaning and it is helpful in the control of mastitis.

ADMINISTRATIVE PROCEDURES

This item is deemed to be satisfied when:

1. Milking is done in a milking barn, stable or parlor.
2. Brushing is completed prior to milking.
3. Flanks, bellies, tails and udders are clipped as often as necessary to facilitate cleaning of these areas and are free from dirt. The hair on the udders shall be of such length that it is not incorporated with the teat in the inflation during milking.
4. Udders and teats of all milking animals are clean and dry before milking. Teats shall be cleaned, treated with a sanitizing solution and dry just prior to milking, except that additional alternative udder preparation methods may also be used once they have been evaluated by FDA and found acceptable.
5. Wet hand milking is prohibited.

ITEM 14r. PROTECTION FROM CONTAMINATION

Milking and milkhouse operations, equipment and facilities shall be located and conducted to prevent any contamination of milk, equipment, containers and utensils. No milk shall be strained, poured, transferred or stored unless it is properly protected from contamination.

After sanitization, all containers, utensils and equipment shall be handled in such a manner as to prevent contamination of any product-contact surface.

Vehicles used to transport milk from the dairy farm to the milk plant receiving station or transfer station shall be constructed and operated to protect their contents from sun, freezing and contamination. Such vehicles shall be kept clean, inside and out, and no substance capable of contaminating the milk shall be transported with the milk.

PUBLIC-HEALTH REASON

Because of the nature of milk and its susceptibility to contamination by disease producing bacteria and other contaminants, every effort should be made to provide adequate protection for the milk at all times. This should include the proper placement of equipment so that work areas in the milking barn and milkhouse are not overcrowded. The quality of any air which is used for the agitation or movement of milk or is directed at a milk product-contact surface should be such that it will not contaminate the milk.

The effect of sanitization of equipment can be nullified if the equipment is not protected after sanitizing.

To protect milk during transportation, delivery vehicles must be properly constructed and operated.

ADMINISTRATIVE PROCEDURES

This item is deemed to be satisfied when:

1. Equipment and operations are so located within the milking barn and milkhouse as to prevent overcrowding and contamination of cleaned and sanitized containers, equipment and utensils by splash, condensation or manual contact.

2. During processing, pipelines and equipment, used to contain or conduct milk and milk products, shall be effectively separated from tanks or circuits containing cleaning and/or sanitizing solutions.

3. All milk which has overflowed, leaked, been spilled or improperly handled is discarded.

4. All product-contact surfaces of containers, equipment and utensils are covered or otherwise protected to prevent the access of insects, dust, condensation and other contamination. All openings, including valves and piping attached to milk storage and milk tank trucks, pumps or vats, shall be capped or otherwise properly protected. Gravity type strainers used in the milkhouse do not have to be covered. Milk pipelines used to convey milk from pre-coolers to the farm bulk tank must be fitted with effective drip deflectors.

5. The receiving receptacle is raised above the floor (as on a dolly or cart), or placed at a distance from the lactating animals, to protect it against manure and splash when milk is poured and/or strained in the milking. Such receptacle shall have a tight-fitting cover, which shall be closed except when milk is being poured.

6. Each pail or container of milk is transferred immediately from the milking barn, stable or parlor to the milkhouse.

7. Pails, cans and other equipment containing milk are properly covered during transfer and storage.

8. Whenever air under pressure is used for the agitation or movement of milk, or is directed at a milk-contact surface, it is free of oil, dust, rust, excessive moisture, extraneous materials and odor, and shall otherwise comply with the applicable standards of Appendix H.

9. Sanitized product-contact surfaces, including farm cooling holding tank openings and outlets, are protected against contact with unsanitized equipment and utensils, hands, clothing, splash, condensation and other sources of contamination.

10. Any sanitized product-contact surface, which has been otherwise exposed to contamination, is again cleaned and sanitized before being used.

11. Vehicles used to transport milk from the dairy farm to the milk plant, receiving station or transfer station are constructed and operated to protect their contents from sun, freezing and contamination.

12. Vehicles have bodies with solid enclosures and tight, solid doors.

13. Vehicles are kept clean, inside and out.

14. No substance capable of contaminating milk is transported with the milk.

Note: See items 10p and 11p for information on the construction of milk tank trucks.

ITEM 15r. DRUG AND CHEMICAL CONTROL

Cleaners and sanitizers shall be stored in properly identified, dedicated end use containers.

Animal drugs and medications and animal drug and medication administration equipment shall be stored in such a way that milk, milking equipment, wash vats and hand sinks are not subject to contamination.

Animal drugs and medications shall be properly labeled and segregated (lactating from non-lactating).

Unapproved drugs shall not be used.

PUBLIC-HEALTH REASON

Accidental misuse of cleaners or sanitizers can result in adulteration of the milk.

Animal drug or medications can result in adverse reactions in people sensitive to those residues and can contribute to the development of strains of drug resistant human pathogens.

ADMINISTRATIVE PROCEDURES

This item is deemed to be satisfied when:

1. Cleaners and sanitizers, used on dairy farms, shall be purchased in containers from the manufacturer or distributor which properly identify the contents or, if bulk cleaners and sanitizers are transferred from the manufacturer's or distributor's container, that the transfer only occur into a dedicated end-use container which is specifically designed and maintained according to the manufacturer's specifications for that specific product. The label on the dedicated end-use container shall include the product name, chemical description, use directions, precautionary and warning statement, first aid instructions, container storage and maintenance instructions and the name and address of the manufacturer or distributor.

2. Equipment used to administer medicinals/drugs is not cleaned in the wash vats and is stored so as not to contaminate the milk or milk contact surfaces of equipment.

3. Medicinals/drugs intended for treatment of non-lactating dairy animals are segregated from those medicinals/ drugs used for lactating animals. (Separate shelves in cabinets, refrigerators or other storage facilities satisfies this item).

4. Drugs and medicinals shall be properly labeled to include the name and address of the manufacturer or distributor (for OTC medicinals/drugs), or veterinary practitioner dispensing the product (for Rx and extra label use medicinals/drugs).

5. Drugs and medicinal labels shall also include:

   a. Directions for use, and prescribed withholding times;

   b. Cautionary statements, if needed; and

   c. Active ingredient(s) in the drug product.

6. Unapproved and/or improperly labeled medicinals/drugs are not used to treat dairy animals and are not stored in the milkhouse, milking barn, stable or parlor.

7. Drugs and medicinals are stored in such a manner that they cannot contaminate the milk or milk product-contact surface of the equipment, containers or utensils.

NOTE: Topical antiseptics, wound dressings (unless intended for direct injection into the teat), vaccines and other biologics, and dosage form vitamins and/or mineral products are exempt from labeling and storage requirements except when it is determined that they are stored in such a manner that they may contaminate the milk or milk product surfaces of containers or utensils.

ITEM 16r. PERSONNEL--HAND-WASHING FACILITIES

Adequate hand-washing facilities shall be provided, including a lavatory fixture with hot and cold, or warm running water, soap or detergent and individual sanitary towels, convenient to the milkhouse, milking barn, stable, parlor and flush toilet.

PUBLIC-HEALTH REASON

The hands of the milker in his preparation for milking come into contact with almost identically the same kind of material as may have contaminated the udders. During the course of their duties and natural habits outside of the milking barn, the milker's hands must be assumed to have been exposed to body discharges. Washing facilities are required in order to increase the assurance that milker's hands will be washed.

ADMINISTRATIVE PROCEDURES

This item is deemed to be satisfied when:

1. Hand-washing facilities are located convenient to the milkhouse, milking barn, stable, parlor and flush toilet.
2. Hand-washing facilities include soap or detergent, hot and cold, or warm running water, individual sanitary towels and a lavatory fixture. Utensil wash and rinse vats shall not be considered as hand-washing facilities.

ITEM 17r. PERSONNEL--CLEANLINESS

Hands shall be washed clean and dried with an individual sanitary towel immediately before milking, before performing any milkhouse function and immediately after the interruption of any of these activities. Milkers and bulk milk hauler/samplers shall wear clean outer garments while milking or handling milk, milk containers, utensils, or equipment.

PUBLIC-HEALTH REASON

The reasons for clean hands of the persons doing the milking are similar to those for the cleanliness of the lactating animal's udder. The milker's hands must be assumed to have been exposed to contamination during the course of his normal duties on the farm and at milking time. Because the hands of all workers frequently come into contact with their clothing it is important that the clothes worn, during milking and the handling of milk, be clean.

ADMINISTRATIVE PROCEDURES

This item is deemed to be satisfied when:

1. Hands are washed, clean and dried with an individual sanitary towel immediately before milking; before performing any milkhouse function; and immediately after the interruption of any of these activities.
2. Milkers and bulk milk hauler/samplers wear clean outer garments while milking or handling milk, milk containers, utensils; or equipment.

ITEM 18r. RAW MILK COOLING

Raw milk for pasteurization shall be cooled to 10°C (50°F) or less within 4 hours or less of the commencement of the first milking and to7^{o}C (45°F) or less within 2 hours after the completion of milking. *Provided*, that the blend temperature after the first milking and subsequent milkings does not exceed 10°C (50°F).

PUBLIC-HEALTH REASON

Milk produced by disease-free lactating animals and under clean conditions usually contains relatively few bacteria immediately after milking. These can multiply to enormous numbers in a few hours unless the milk is cooled. However when the milk is cooled quickly to 7°C

(45°F) or less, there is only a slow increase in the numbers of bacteria.

Usually, the bacteria in milk are harmless, and if this were always true there would be no reason to cool milk, except to delay souring. There is; however, no way for the dairyman or regulating officer to be absolutely sure that no disease bacteria have entered the milk, even though observance of the other items of this *Ordinance* will greatly reduce this likelihood. The likelihood of transmitting disease is much increased when the milk contains large numbers of disease bacteria. Therefore, it is extremely important for milk to be cooled quickly, so that small numbers of bacteria, which may have entered, will not multiply.

ADMINISTRATIVE PROCEDURES

This item is deemed to be satisfied when:

1. Raw milk for pasteurization shall be cooled to 10°C (50°F) or less within 4 hours or less of the commencement of the first milking and to7°C (45°F) or less within 2 hours after the completion of milking. *Provided*, that the blend temperature after the first milking and subsequent milkings does not exceed 10°C (50°F).

2. Recirculated cold water which is used in plate or tubular coolers or heat exchangers is from a safe source and protected from contamination. Such water shall be tested semiannually and shall comply with the bacteriological standards of Appendix G.

3. All farm bulk milk tanks manufactured after January 1, 2000 shall be equipped with an approved temperature recording device.

   a. The recording device shall be operated continuously and be maintained in a properly functioning manner. Circular charts shall not overlap.
   b. The recording device shall be verified in a manner acceptable to the regulatory agency by a traceable standard thermometer.
   c. Recording thermometer charts shall be maintained on the premises for a period of a minimum of six (6) months and available to the regulatory agency.
   d. The recording thermometer should be installed in an area convenient to the milk storage tank and acceptable to the regulatory agency.
   e. The recording thermometer sensor shall be located to permit the registering of the temperature of the contents when the tank contains no more than ten percent (10%) of its calibrated capacity.
   f. The recording thermometer shall comply with the current technical specifications for tank recording thermometers.
   g. A recording thermometer and/or any other device that meets the intent of these administrative procedures and technical specifications and is acceptable to the regulatory agency can be used to monitor/record the bulk tank temperature.
   h. The recording thermometer charts shall properly identify the producer, date, and signature of the person removing the chart.

The information from recording thermometer charts on farm bulk milk tanks shall not be used for enforcement purposes except in cases where an imminent health hazard exists or be

debited on state ratings or FDA check ratings until 12-01-01.

In addition, during the interim period, information should be forwarded by states, FDA and the industry to a NCIMS Committee approved by the Executive Board for recommendation to the next NCIMS Conference of appropriate procedures to be taken in areas of enforcement, debits and responsibilities of administration surrounding the use of recording thermometers on farm bulk milk tanks.

ITEM 19r. INSECT AND RODENT CONTROL

Effective measures shall be taken to prevent the contamination of milk, containers, equipment and utensils by insects and rodents and by chemicals used to control such vermin. Milk rooms shall be free of insects and rodents. Surroundings shall be kept neat, clean and free of conditions which might harbor or be conducive to the breeding of insects and rodents. Feed shall be stored in such a manner that it will not attract birds, rodents or insects.

PUBLIC HEALTH REASON

Proper manure disposal reduces the breeding of flies, which are considered capable of transmitting infection by physical contact or through excreta to milk or milk utensils. Flies visit insanitary places, they may carry disease organisms on their bodies and they may carry living bacteria for as long as 4 weeks within their bodies, and they may pass them on to succeeding generations by infecting their eggs. Effective screening tends to prevent the presence of flies, which are a public health menace. Flies may contaminate the milk with disease germs, which may multiply and become sufficiently numerous to present a public health hazard. The surroundings of a dairy should be kept neat and clean to encourage cleanliness and reduce insect and rodent harborages.

ADMINISTRATIVE PROCEDURES

This item is deemed to be satisfied when:

1. Surroundings are kept neat, clean and free of conditions which might harbor or be conducive to the breeding of insects and rodents. During fly season, manure shall be spread directly on the fields; or stored for not more than 4 days in a pile on the ground surface and then spread on the fields; or stored for not more than 7 days in an impervious-floored bin, or on an impervious-curbed platform and then spread; or stored in a tight-screened and trapped manure shed; or effectively treated with larvicides; or disposed of in any other manner which controls insect breeding.
2. Manure packs in loafing areas, stables without stanchions, pen stables, resting barns, wandering sheds and free-stall housing are properly bedded and managed to prevent fly breeding.
3. Milkrooms are free of insects and rodents.
4. Milkrooms are effectively screened or otherwise protected against the entrance of vermin.
5. Outer milkhouse doors are tight and self-closing. Screen doors shall open outward.
6. Effective measures are taken to prevent the contamination of milk, containers, utensils and equipment by insects and rodents and by chemicals used to control such vermin. Insecticides and rodenticides, not approved for use in the

milkhouse, shall not be stored in the milkhouse.

7. Only insecticides and rodenticides approved for use by the regulatory agency and/or registered with the U.S. Environmental Protection Agency, are used for insect and rodent control. (See Appendix C, for further information about insect and rodent control.)

8. Insecticides and rodenticides are used only in accordance with manufacturer's label directions and are used so as to prevent the contamination of milk, milk containers, equipment, utensils, feed and water.

9. Have covered boxes, bins or separate storage facilities for ground, chopped or concentrated feed.

10. Feed may be stored in the milking portion of the barn only in such a manner as will not attract birds, flies or rodents. Open feed dollies or carts may be used for distributing the feed, but not storing feed, in the milking barn. Feed dollies, carts, fully automated feeding systems, or other feed containers may be exempt from the use of covers provided, they do not attract birds, insects, or rodents.

NOTE:: A convenient inspection form for producer dairy farms, which summarizes the applicable sanitation requirements is found in Appendix M.

STANDARDS FOR GRADE "A" PASTEURIZED, ULTRA-PASTEURIZED AND ASEPTICALLY PROCESSED MILK AND MILK PRODUCTS

A receiving station shall comply with Items 1p to 15p, inclusive, and 17p, 20p and 22p, except that the partitioning requirement of Item 5p shall not apply.

A transfer station shall comply with Items 1p, 4p, 6p, 7p, 8p, 9p, 10p, 11p, 12p, 14p, 15p, 20p and 22p and as climatic and operating conditions require, the applicable provisions of Items 2p and 3p. *Provided*, that in every case, overhead protection shall be provided.

Facilities for the cleaning and sanitizing of milk tank trucks shall comply with Items 1p, 4p, 6p, 7p, 8p, 9p, 10p, 11p, 12p, 14p, 15p, 20p and 22p and as climatic and operating conditions require, the applicable provisions of Items 2p and 3p. *Provided*, that in every case, overhead protection shall be provided.

ITEM 1p. FLOORS--CONSTRUCTION

The floors of all rooms in which milk or milk products are processed, handled or stored, or in which milk containers, equipment and utensils are washed, shall be constructed of concrete or other equally impervious and easily cleanable material; and shall be smooth, properly sloped, provided with trapped drains and kept in good repair. *Provided*, that cold-storage rooms used for storing milk and milk products need not be provided with floor drains when the floors are sloped to drain to one or more exits. *Provided further*, that storage rooms for storing dry ingredients and/or packaging materials need

not be provided with drains and the floors may be constructed of tightly joined wood.

PUBLIC-HEALTH REASON

Floors constructed of concrete or other similarly impervious material can be kept clean more easily than floors constructed of wood or other pervious or easily disintegrating material. They will not absorb organic matter and are; therefore, more apt to be kept clean and free of odors. Properly sloped floors facilitate flushing and help to avoid undesirable conditions. Trapping of drains prevents sewer gas from entering the plant.

ADMINISTRATIVE PROCEDURES

This item is deemed to be satisfied when:

1. The floors of all rooms in which milk is handled, processed, or stored or in which milk containers or utensils are washed, are constructed of good quality concrete, or equally impervious tile or brick laid closely with impervious joint material, or metal surfacing with impervious joints, or other material which is the equivalent of good quality concrete. The floors of storage rooms for dry ingredients and/or packaging material may be constructed of tightly joined wood.
2. The floor surface is smooth and sloped, so that there are no pools of standing water after flushing, and the joints between the floor and the walls are impervious.
3. The floors are provided with trapped drains. Cold-storage rooms used for storing milk and milk products need not be provided with floor drains when the floors are sloped to drain to one or more exits. Storage rooms for dry ingredients and/or packaging materials need not be provided with drains.

ITEM 2p. WALLS AND CEILINGS--CONSTRUCTION

Walls and ceilings of rooms in which milk or milk products are handled, processed or stored, or in which milk containers, utensils and equipment are washed, shall have a smooth, washable, light-colored surface and be in good repair.

PUBLIC-HEALTH REASON

Painted or otherwise properly finished walls and ceilings are more easily kept clean and are; therefore, more apt to be kept clean. A light-colored paint or finish aids in the even distribution of light and the detection of unclean conditions.

ADMINISTRATIVE PROCEDURES

This item is deemed satisfied when:

1. Walls and ceilings are finished with smooth, washable, light-colored impervious materials.
2. Walls, partitions, windows and ceilings are kept in good repair.

ITEM 3p. DOORS AND WINDOWS

Effective means shall be provided to prevent the access of flies and rodents. All openings to the outside shall have solid doors or glazed windows which shall be closed during dusty weather.

PUBLIC-HEALTH REASON

Freedom from flies in the milk plant reduces the likelihood of contamination of the milk. For information on disease transmission by flies see Item 7r, Public-Health Reason.

ADMINISTRATIVE PROCEDURES

This item is deemed to be satisfied when:

1. All openings to the outer air are effectively protected by:
   a. Screening; or
   b. Effective electric screen panels; or
   c. Fans or air curtains which provide sufficient air velocity so as to prevent the entrance of flies; or
   d. Properly constructed flaps where it is impractical to use self-closing doors or air curtains; or
   e. Any effective combination of a, b, c, or d or by any other method which prevents the entrance of flies.
2. All outer doors are tight and self-closing. Screen doors shall open outward.
3. All outer openings are rodent-proofed to the extent necessary to prevent the entry of rodents.

NOTE: The evidence of insects and/or rodents in the plant shall be considered under Item 9p.

ITEM 4p. LIGHTING AND VENTILATION

All rooms in which milk or milk products are handled, processed or stored and/or in which milk containers, equipment and utensils are washed shall be well lighted and well ventilated.

PUBLIC-HEALTH REASON

Ample light promotes cleanliness. Proper ventilation reduces odors and prevents condensation upon interior surfaces.

ADMINISTRATIVE PROCEDURES

This item is deemed to be satisfied when:

1. Adequate light sources are provided (natural, artificial or a combination of both) which furnish at least 20 foot-candles of light in all working areas. This shall apply to all rooms where milk or milk products are handled, processed or stored, or where utensils, containers and/or equipment are washed. Dry storage and cold storage rooms shall be provided with at least 5 foot-candles of light.
2. Ventilation in all rooms is sufficient to keep them reasonably free of odors and excessive condensation on equipment, walls and ceilings.
3. Pressurized ventilating systems, if used, have a filtered air intake.

ITEM 5p. SEPARATE ROOMS

There shall be separate rooms for:

1. The pasteurizing, processing, cooling and packaging of milk and milk products.
2. The cleaning of milk cans, bottles and cases.
3. The fabrication of containers and closures for milk and milk products.
4 Cleaning and sanitizing facilities for milk tank trucks in plants receiving milk in such tanks.
5. Receiving cans of milk and milk products in plants receiving such cans.

Rooms in which milk or milk products are handled, processed or stored, or in which milk containers, utensils and equipment are washed or stored, shall not open directly into any stable or any room used for domestic purposes. All rooms shall

be of sufficient size for their intended purposes.

Designated areas or rooms shall be provided for the receiving, handling and storage of returned packaged milk and milk products.

PUBLIC-HEALTH REASON

If the washing and sanitization of containers are conducted in the same room in which the pasteurizing, processing, cooling or packaging is done, there is opportunity for the pasteurized product to become contaminated. For this reason, separate rooms are required as indicated. The unloading of cans of raw milk directly into the pasteurizing room is apt to increase the prevalence of flies therein, as well as to render it too public.

ADMINISTRATIVE PROCEDURES[11]

This item is deemed to be satisfied when:

1. Pasteurizing, processing, cooling and packaging are conducted in a single room(s), but not in the same room(s) used for the cleaning of milk cans, bottles and cases, or the unloading and/or cleaning and sanitizing of milk tank trucks. *Provided*, that cooling (plate or tubular) may be done in the room where milk tank trucks are unloaded and/or cleaned and sanitized. Separation/clarification of raw milk may be done in an enclosed room where tank trucks are unloaded and/or cleaned and sanitized.

2. All returned packaged milk and milk products which have physically left the premises of the processing plant shall be received, handled and stored in separate areas or rooms isolated from the Grade "A" dairy operations. Such separate areas or rooms shall be clearly defined and marked for such use.

3. All bulk milk storage tanks are vented into a room used for pasteurization, processing, cooling or packaging operations, or into a storage tank gallery room. *Provided*, that vents located elsewhere which are adequately equipped with air filters so as to preclude the contamination of the milk, shall be considered satisfactory.

4. Facilities for the cleaning and sanitizing of milk tank trucks are properly equipped for manual and/or mechanical operations. When such facilities are not provided on the plant premises, these operations shall be performed at a receiving station, transfer station or separate milk tank truck cleaning facility. (Items relating to facilities for cleaning and sanitizing milk tank trucks are listed at the beginning of this section.

5. Rooms in which milk or milk products are handled, processed or stored, or in which milk containers, utensils and equipment are washed or stored, do not open directly into any stable or any room used for domestic purposes.

---

[11]Communities and/or States desiring to regulate cottage cheese, dry curd cottage cheese and reduced fat or low fat cottage cheese under the terms of this Ordinance should include the following in the Administrative Procedures of Item 5p: "Cottage cheese vats shall be located in a separate room, maintained free from flies and other vermin and kept in a clean condition. Provided, that in existing installations, cottage cheese vats may be located in the processing room when there is no evidence of overcrowding, excessive traffic, condensation or splash. Cottage cheese vats located in processing rooms shall be equipped with multi-service or single-service covers which shall be kept in place at all times during the setting operation."

6. All rooms shall be of sufficient size for their intended purposes.

ITEM 6p. TOILET-SEWAGE DISPOSAL FACILITIES

Every milk plant shall be provided with toilet facilities conforming with the regulations of the ... of ...[12]. Toilet rooms shall not open directly into any room in which milk and/or milk products are processed. Toilet rooms shall be completely enclosed and shall have tight-fitting, self-closing doors. Dressing rooms, toilet rooms and fixtures shall be kept in a clean condition, in good repair and shall be well ventilated and well lighted. Sewage and other liquid wastes shall be disposed of in a sanitary manner.

PUBLIC-HEALTH REASON

Human excreta are potentially dangerous and must be disposed of in a sanitary manner. The organisms causing typhoid fever, para-typhoid fever and dysentery may be present in the body discharges of active cases or carriers. Sanitary toilet facilities are necessary to protect the milk, equipment and containers from fecal contamination which may be carried by flies, other insects, hands or clothing. When the toilet facilities are of a satisfactory type, are kept clean and are in good repair, the opportunities for the spread of contamination by the above means are minimized. The provision of an intervening room or vestibule between the toilet room and any room in which milk or milk products are processed makes it less likely that contaminated flies will enter these rooms. It will also minimize the spread of odors.

The wastes resulting from the cleaning and rinsing of containers, equipment and floors, from flush toilets, and from washing facilities, should be properly disposed of so as not to contaminate the milk equipment, or to create a nuisance or a public health hazard.

ADMINISTRATIVE PROCEDURES

This item is deemed to be satisfied when:

1. The milk plant is provided with toilet facilities conforming with the regulations of the ... of ...[13].
2. Toilet rooms do not open directly into any room in which milk and/or milk products are processed.
3. Toilet rooms are completely enclosed and have tight-fitting, self-closing doors.
4. Dressing rooms, toilet rooms and fixtures are kept in a clean condition, in good repair and are well ventilated and well lighted.
5. Toilet tissue and easily cleanable covered waste receptacles are provided in toilet rooms.
6. All plumbing is installed to meet the applicable provisions of the State or local plumbing code.
7. Sewage and other liquid wastes are disposed of in a sanitary manner.
8. Non-water-carried sewage disposal facilities are not used.

---

[12] Substitute proper legal jurisdiction here and in al similar places throughout the *Ordinance.*

[13] Substitute proper legal jurisdiction here and in all similar places throughout the *Ordinance*.

ITEM 7p. WATER SUPPLY

Water for milk plant purposes shall be from a supply properly located, protected and operated and shall be easily accessible, adequate and of a safe, sanitary quality.

PUBLIC-HEALTH REASON

The water supply should be accessible in order to encourage its use in cleaning operations; it should be adequate so that cleaning and rinsing may be thorough; and it should be of a safe, sanitary quality in order to avoid the contamination of milk equipment and containers.

ADMINISTRATIVE PROCEDURES[14]

This item is deemed to be satisfied when:

1. Water for milk plant purposes is from an adequate supply, properly located, protected and operated. It shall be easily accessible and of a safe, sanitary quality.

2. The water supply is approved as safe by the State water control authority and, in the case of individual water systems, complies with the specification outlined in Appendix D, and the bacteriological standards outlined in Appendix G.

3. There is no cross-connection between the safe water supply and any unsafe or questionable water supply, or any source of pollution through which the safe water supply might become contaminated. A connection between the water supply piping and a make-up tank (such as for cooling or condensing), unless protected by an air gap or effective backflow preventer, constitutes a violation of this requirement.

4. Condensing water for milk evaporators, and water used to produce vacuum and/or to condense vapors in vacuum heat processing equipment, is from a source complying with 2. above. *Provided*, that when approved by the regulatory agency, water from sources not complying with 2. above may be used when the evaporator or vacuum heat equipment is constructed and operated to preclude contamination of such equipment, or its contents by condensing water or by water used to produce vacuum. Means of preventing such contamination are:

a. Use of a surface type condenser in which the condensing water is physically separated from the vapors and condensate; or

b. Use of reliable safeguards to prevent the overflow of condensing water from the condenser into the evaporator. Such safeguards include a barometric leg extending at least 35 feet vertically from the invert of the outgoing condensing water line to the free level at which the leg discharges, or a safety shutoff valve, located on the water feed line to the condenser, automatically actuated by a control which will shut off the in-flowing water when the water level rises above a predetermined point in the condenser. This valve may be actuated by water, air or electricity, and shall be designed so that failure of the primary motivating power will automatically stop the flow of water into the condenser.

---

[14]Communities and/or States desiring to regulate cottage cheese, dry curd cottage cheese and reduced fat or lowfat cottage cheese under the terms of this Ordinance should include the following in the Administrative Procedures of Item 7p: "Water supply outlets are provided immediately available to the cottage cheese vats. The hose for transport of water, for washing cottage cheese curd, shall be arranged in such a way as to preclude the possibility of the hose touching the floor or the product."

5. Condensing water for all milk evaporators, complying with 2. above, and water reclaimed from milk or milk products may be reused when all necessary means of protection are afforded and it complies with the procedures outlined in Appendix D, Part V.

6. New individual water supplies and water supply systems, which have been repaired or otherwise become contaminated, are disinfected before being placed in use (See Appendix D). The supply shall be made free of the disinfectant by pumping to waste before any sample for bacteriological testing shall be collected.

7. Samples for bacteriological testing of individual water supplies are taken upon the initial approval of the physical structure, each 6 months thereafter and when any repair or alteration of the water supply system has been made. Samples shall be taken by the regulatory agency and examinations shall be conducted in an official laboratory. To determine if water samples have been taken at the frequency established in this section, the interval shall include the designated six month period plus the remaining days of the month in which the sample is due.

8. Current records of water test results are retained on file with the regulatory agency or as the regulatory agency directs.

ITEM 8p. HAND-WASHING FACILITIES

Convenient hand-washing facilities shall be provided, including hot and cold and/or warm running water, soap and individual sanitary towels or other approved hand-drying devices. Hand-washing facilities shall be kept in a clean condition and in good repair.

PUBLIC-HEALTH REASON

Proper use of hand-washing facilities is essential to personal cleanliness and reduces the likelihood of contamination of milk and milk products.

ADMINISTRATIVE PROCEDURES

This item is deemed to be satisfied when:

1. Convenient hand-washing facilities are provided, including hot and cold and/or warm running water, soap and individual sanitary towels or other approved hand-drying devices.

2. Hand-washing facilities are convenient to all toilets and to all rooms in which milk plant operations are conducted.

3. Hand-washing facilities are kept in a clean condition and in good repair.

4. Steam-water mixing valves and vats for washing bottles, cans and similar equipment are not used as hand-washing facilities.

ITEM 9p. MILK PLANT CLEANLINESS

All rooms in which milk and milk products are handled, processed or stored, and/or in which containers, utensils or equipment are washed or stored, shall be kept clean, neat and free of evidence of insects and rodents. Only equipment directly related to processing operations or the handling of containers, utensils and equipment shall be permitted in the pasteurizing, processing, cooling, packaging and bulk milk storage rooms.

PUBLIC-HEALTH REASON

Clean floors, free of litter, clean walls, ceilings and all other areas of the dairy plant are conducive to clean milk

handling operations. Cleanliness and freedom from flies, insects and rodents reduces the likelihood of contamination of the milk or milk product. Excess or unused equipment or equipment not directly related to the dairy plant operations can be detrimental to the cleanliness of the dairy plant.

ADMINISTRATIVE PROCEDURES

This item is deemed to be satisfied when:

1. Only equipment directly related to processing operations or the handling of containers, utensils and equipment is permitted in the pasteurizing, processing, cooling, packaging and bulk milk storage rooms.
2. All piping, floors, walls, ceilings, fans, shelves, tables and the non-product-contact surfaces of other facilities and equipment are clean.
3. No trash or solid waste is stored within the plant, except in covered containers. Waste containers at the packaging machine or bottle washer may be uncovered during the operation of such equipment.
4. All rooms in which milk and milk products are handled, processed or stored, and/or in which containers, utensils, or equipment are washed or stored, are kept clean, neat and free of evidence of insects and rodents.

ITEM 10p. SANITARY PIPING

All sanitary piping, fittings and connections which are exposed to milk or milk products, or from which liquids may drip, drain or be drawn into milk or milk products, shall consist of smooth, impervious, corrosion-resistant, nontoxic, easily cleanable material which is approved for food contact surfaces. All piping shall be in good repair. Pasteurized milk and milk products shall be conducted from one piece of equipment to another only through sanitary piping.[15]

PUBLIC-HEALTH REASON

Milk piping and fittings are sometimes so designed as to be difficult to clean, or they may be constructed of metal which corrodes easily. In either case, it is unlikely that they will be kept clean. Sanitary milk piping is a term which applies to properly designed and properly constructed piping.

The purpose of the third sentence is to prevent exposure of the pasteurized product to contamination.

ADMINISTRATIVE PROCEDURES

This item is deemed to be satisfied when:

1. All sanitary piping, fittings and connections which are exposed to milk or milk products, or from which liquids may drip, drain or be drawn into milk products, consist of smooth, impervious, corrosion-resistant, nontoxic, easily cleanable material.
2. All sanitary piping, connections and fittings consist of:
   a. Stainless steel of the AISI (American Iron and Steel Institute) 300 series; or
   b. Equally corrosion-resistant metal which is nontoxic and nonabsorbent; or

[15] Communities and/or States desiring to regulate cottage cheese, dry curd cottage cheese and reduced fat or lowfat cottage cheese under the terms of this *Ordinance* should add the following: "*Provided*, that cottage cheese, cheese dressings or cheese ingredients may be transported by other methods which protect the product from contamination."

c. Heat resistant glass; or

d. Plastic, or rubber and rubber-like materials which are relatively inert, resistant to scratching, scoring, decomposition, crazing, chipping and distortion under normal use conditions; are nontoxic, fat resistant, relatively nonabsorbent; which do not impart flavor or odor to the product; and which maintain their original properties under repeated use conditions, may be used for gaskets, sealing applications and for short flexible takedown jumpers or connections where flexibility is required for essential or functional reasons.

3. Sanitary piping, fittings and connections are designed to permit easy cleaning, kept in good repair and free of breaks or corrosion, and contain no dead ends of piping in which milk may collect.

4. All interior surfaces of demountable piping, including valves, fittings and connections are designed, constructed and installed to permit inspection and drainage.

5. All mechanically cleaned milk pipelines and return-solution lines are rigid, self-draining and so supported to maintain uniform slope and alignment. Return solution lines shall be constructed of material meeting the specifications of 2. above. If gaskets are used, they shall be self-positioning, of material meeting the specifications outlined in 2. above and designed, finished and applied to form a smooth, flush interior surface. If gaskets are not used, all fittings shall have self-positioning faces designed to form a smooth, flush interior surface. All interior surfaces of welded joints in pipelines shall be smooth and free from pits, cracks or inclusions.

In the case of welded lines, all welds shall be inspected as they are made and such welds shall be approved by the regulatory agency.

Each cleaning circuit shall have access points for inspection in addition to the entrances and exits. These may be valves, removable sections, fittings or other means of combinations that are adequate for the inspection of the interior of the line. These access points shall be located at sufficient intervals to determine the general condition of the interior surfaces of the pipeline.

Detailed plans for welded pipeline systems shall be submitted to the regulatory agency for written approval prior to installation. No alteration or addition shall be made to any welded milk pipeline system without prior written approval from the regulatory agency.

6. Pasteurized milk and milk products are conducted from one piece of equipment to another only through sanitary milk piping.

ITEM 11p. CONSTRUCTION AND REPAIR OF CONTAINERS AND EQUIPMENT

All multi-use containers and equipment with which milk or milk products come into contact shall be of smooth, impervious, corrosion-resistant, nontoxic material; shall be constructed for ease of cleaning; and shall be kept in good repair. All single-service containers, closures, gaskets and other articles with which milk or milk products come in contact shall be nontoxic and shall have been manufactured, packaged, transported and handled in a sanitary manner. Articles intended for single-service use shall not be reused.

PUBLIC-HEALTH REASON

When equipment is not constructed and located so that it can be cleaned easily, and which is not kept in good repair, it is unlikely that it will be properly cleaned.

Single-service articles, which have not been manufactured and handled in a sanitary manner may contaminate the milk.

ADMINISTRATIVE PROCEDURES

This item is deemed to be satisfied when:

1. All multi-use containers and equipment with which milk or milk products come into contact are of smooth, impervious, corrosion-resistant and nontoxic material.

2. All milk-contact surfaces of multi-use containers and equipment consist of:

a. Stainless steel of the AISI (American Iron and Steel Institute) 300 series; or

b. Equally corrosion-resistant metal which is nontoxic and nonabsorbent; or

c. Heat resistant glass; or

d. Plastic or rubber and rubber-like materials which are relatively inert, resistant to scratching, scoring, decomposition, crazing, chipping and distortion under normal use conditions; which are nontoxic, fat resistant, relatively nonabsorbent and do not impart flavor or odor to the product; and which maintain their original properties under repeated use conditions.

3. All joints in containers, equipment and utensils are flush and finished as smooth as adjoining surfaces. Where a rotating shaft is inserted through a surface with which milk or milk products come into contact, the joint between the moving and stationary surfaces shall be close-fitting. Where a thermometer or temperature sensing element is inserted through a surface, with which milk or milk products come into contact, a pressure-tight seal shall be provided ahead of all threads and crevices.

4. All openings in covers of tanks, vats, separators, etc. are protected by raised edges, or otherwise, to prevent the entrance of surface drainage. Condensation-diverting aprons shall be provided as close to the tank or vat as possible on all pipes, thermometers, or temperature sensing elements and other equipment extending into a tank, bowl, vat or distributor, unless a watertight joint is provided.

5. All surfaces with which milk or milk products come into contact are easily accessible or demountable for manual cleaning or are designed for mechanical cleaning. All product-contact surfaces shall be readily accessible for inspection and shall be self-draining.

6. There are no threads used in contact with milk or milk products except where needed for functional and safety reasons, such as in clarifiers, pumps and separators. Such threads shall be of a sanitary type.

7. All multi-use containers and other equipment have rounded corners, are in good repair and free from breaks, crevices and corrosion. Milk cans shall have umbrella-type covers.

8. Strainers, if used, are of perforated metal design and so constructed as to utilize single-service strainer media. Multiple-use, woven material shall not be used for straining milk. *Provided*, that when required for functional reasons inherent to the production of certain milk products, such as buttermilk, whey and dry milk products, woven material may be used where it is impractical to use perforated metal. However, woven material parts shall be mechanically cleaned by such methods that thoroughly clean the woven material and do not contaminate the product.

9. All single-service containers, closures, gaskets and other articles, with which milk or milk products come in contact, are nontoxic.

10. The manufacture, packing, transportation and handling of single-service containers, closures, caps, gaskets and similar articles comply with the requirements of Appendix J, Standards for the Fabrication of Single-Service Containers and Closures for Milk and Milk Products. Inspections and tests shall be made by the regulatory agency or any agency authorized by them.

NOTE: *3-A Sanitary Standards:* 3-A Sanitary Standards for dairy equipment are promulgated jointly by the Sanitary Standards Subcommittee of the Dairy Industry Committee, the Committee on Sanitary Procedure of the International Association for Food Protection and the Milk Safety Branch, Center for Food Safety and Applied Nutrition, Food and Drug Administration, Public Health Service, Department of Health and Human Services. Equipment manufactured in conformity with 3-A Sanitary Standards complies with the sanitary design and construction standards of this *Ordinance*.

ITEM 12p. CLEANING AND SANITIZING OF CONTAINERS AND EQUIPMENT

The product-contact surfaces of all multi-use containers, utensils and equipment used in the transportation, processing, handling and storage of milk or milk products shall be effectively cleaned and shall be sanitized before each use. *Provided*, that piping, equipment and containers used to process, conduct or package aseptically processed milk and milk products, beyond the final heat treatment process, shall be sterilized before any aseptically processed milk or milk product is packaged and shall be resterilized whenever any unsterile product has contaminated it.

PUBLIC-HEALTH REASON

Milk and milk products cannot be kept clean and safe, if permitted to come into contact with containers, utensils and equipment which have not been properly cleaned and sanitized.

ADMINISTRATIVE PROCEDURES

This item is deemed to be satisfied when:

1. All multi-use containers and utensils are thoroughly cleaned after each use and all equipment is thoroughly cleaned at least once each day used unless the FDA and the state dairy regulatory authority have reviewed and accepted information supporting the cleaning of multi-use containers and utensils at frequencies extending beyond one day. *Provided*, that storage tanks shall be cleaned when emptied and shall be emptied at least every 72 hours. Records must be available to verify that milk storage in these tanks does not exceed 72 hours. These records shall be available for at least the previous 3 months or from the time of the last regulatory inspection whichever is longer. In the case of pasteurized storage tanks which are mechanically cleaned at intervals of less than 72 hours, the mechanical cleaning records required under 2.b. of this section shall be considered adequate. Storage tanks which are used to store raw milk or heat-treated milk products longer than 24 hours and silo tanks used for the storage of raw milk or heat-treated milk products shall be equipped with a 7-day temperature recording device complying with the specifications of Appendix H.

Whenever a milk tank truck has been cleaned and sanitized, as required by the regulatory agency, it shall bear a tag or a record shall be made showing the date, time,

place and signature or initials of the employee or contract operator doing the work, unless the truck delivers to only one receiving unit where responsibility for cleaning and sanitizing can be definitely established without tagging. The tag shall be removed at the location where the tank truck is next washed and sanitized and kept on file for 15 days as directed by the regulatory agency.

2. Pipelines and/or equipment designed for mechanical cleaning meet the following requirements:

a. An effective cleaning and sanitizing regimen for each separate cleaning circuit shall be followed.

b. A temperature recording device, complying with the specifications in Appendix H, or a recording device which provides sufficient information to adequately evaluate the cleaning and sanitizing regimen and which is approved by the local regulatory agency, shall be installed in the return solution line or other appropriate area to record the temperature and time which the line or equipment is exposed to cleaning and sanitizing solutions. For purposes of this section, recording devices which produce records not meeting the specifications of Appendix H may be acceptable if;

(1) The device provides a continuous record of the monitoring of the cleaning cycle time and temperature, cleaning solution velocity or cleaning pump operation and the presence or strength of cleaning chemicals for each cleaning cycle.

(2) The record shows a pattern so typical of each circuit cleaned that changes in the cleaning regimen can be readily detected.

(3) Electronic storage of required cleaning records with or without hard copy printouts may be acceptable provided the computer and computer generated records are readily available and meet the criteria of this section and those provisions of Appendix H which are determined to be applicable by the regulatory agency and FDA.

c. Cleaning charts and electronically stored records required by this section shall be identified, dated and retained for 3 months or until the next regulatory inspection, whichever is longer.

d. During each official inspection, the regulatory agency shall examine charts and records to verify the cleaning regimens.

3. Plants in which containers are washed manually are equipped with a two-compartment wash-and-rinse vat for this purpose. Such plants shall also provide a steam cabinet or individual steam-jet plate with hood for sanitizing of cleaned containers, or if sanitizing is done with chemicals, a third treatment vat.

4. In plants utilizing automatic bottle washers, such washers must provide for bactericidal treatment by means of steam, hot water or chemical treatment. In soaker-type bottle washers, in which bactericidal treatment depends upon the causticity of the washing solution, the caustic strength for a given soaking time and temperature shall be as specified in the following table which lists the combinations of causticity, time and temperature, of equal bactericidal value, for the soaker tank of soaker-type bottle washers:

Table 2. Combinations of Causticity, Time and Temperature, of Equal Bactericidal Value, for the Soaker Tank of Soaker Type Bottle Washers

(Based on NSDA Specifications for beverage bottles.

	Temperature, Degrees						
C	77	71	66	60	54	49	43
F	170	160	150	140	130	120	110
Time in Minutes	**Concentration of NaOH (percent)**						
3	0.57	0.86	1.28	1.91	2.86	4.27	6.39
5	0.43	0.64	0.96	1.43	2.16	3.22	4.80
7	0.36	0.53	0.80	1.19	1.78	2.66	3.98

NOTE: The National Soft Drink Association (NSDA), Washington, D.C. 20036 alkali test, the NSDA caustic test, or other suitable test may be used to determine the strength of the soaker solution. The caustic strength shall be tested monthly by the regulatory agency.

When caustic is so used, subsequent final rinsing of the bottles shall be with water which has been treated with heat or chemicals to assure freedom from viable pathogenic or otherwise harmful organisms, to prevent recontamination of the treated bottle during the rinsing operation.

5. All multi-use containers, equipment and utensils are sanitized before use, employing one or a combination of the methods prescribed under Item 11r. Assembled equipment must be sanitized prior to each day's run, unless the FDA and the state dairy regulatory authority have reviewed and accepted information supporting the sanitizing of multi-use containers, equipment and utensils at frequencies extending beyond one day. Tests to determine the efficiency of sanitization should be made by the regulatory agency at intervals sufficient to satisfy the regulatory agency that the sanitization process is effective. Provided, that all piping, equipment and containers used to conduct, process or package aseptically processed milk and milk products, beyond the final heat treatment process, shall be sterilized by heat, chemical sterilant(s) or other appropriate treatment before use and resterilized whenever it has been contaminated by unsterile product.

6. a. The residual bacteria count of multi-use containers and closures shall be conducted as outlined in Appendix J. The residual bacteria count of multi-use containers, used for packaging pasteurized milk and milk products, shall not exceed one organism per milliliter of capacity, when the rinse test is used, or not over 50 colonies per 50 square centimeters (one colony per square centimeter) of product-contact surface, when the swab test is used, in 3-out-of-4 samples taken at random on a given day. All multi-use containers shall be free of coliform organisms.

b. The residual bacteria count of single-service containers and closures, used for packaging pasteurized milk and milk products, shall not exceed 50 per container, when the rinse test is used, except that in

containers less than 100 ml, the count shall not exceed 10 or not over 50 colonies per 8 square inch (1 per square centimeter) of product-contact surface, when the swab test is used, in 3-out-of-4 samples taken at random on a given day. All single-service containers shall be free of coliform organisms.

When single-service containers or closures are fabricated in another plant which conforms to the Standards of Appendix J, and the regulatory agency has information that they do comply, the regulatory agency may accept the containers as being in conformance without additional tests. If there is reason to believe that containers do not conform to the bacteriological standards, additional tests may be required. If containers are fabricated in the dairy plant, the regulatory agency shall collect at least 4 sets of containers, each 6 months, and determine conformance.

7. Plants which utilize multi-use plastic containers, for pasteurized milk and milk products, shall comply with the following criteria:

a. All containers shall be identified as to plant of manufacture, date of manufacture and type and class of plastic material used. This information may be by code. *Provided*, that the code is revealed to the regulatory agency.

b. A device shall be installed in the filling line capable of detecting, in each container before it is filled, volatile organic contaminants in amounts that are of public health significance. Such device must be constructed so that it may be sealed by the regulatory agency to prevent the changing of its sensitivity functioning level. Models using an air injection system and with a testing device built into the detection equipment do not have to be sealed. To assure proper functioning of the system the operator needs to be able to adjust the sensitivity. However, those models utilizing an external testing device must be sealed. Any container detected by the device as being unsatisfactory must be automatically made unusable to prevent refilling. In addition, the device must be interconnected so that the system will not operate unless the detecting device is in proper operating condition. *Provided*, that any other system so designed and operated that will provide equal assurance of freedom from contamination and recognized by the Food and Drug Administration to be equally efficient may be accepted by the regulatory agency.

c. A standard must be available for use by the regulatory agency for testing the proper sensitivity functioning levels of the detection device.

d. The containers shall comply with the applicable construction requirements of Item 11p. of this *Ordinance*. The closure for the container shall be single-service. Screw-type closures shall not be used.

e. The container shall not impart, into the product, pesticide residual levels or other chemical contaminants in excess of those considered acceptable under the *Federal Food, Drug, and Cosmetic Act*, as amended and regulations issued thereunder.

f. The phrase "Use only for food" shall appear on all containers.

ITEM 13p. STORAGE OF CLEANED CONTAINERS AND EQUIPMENT

After cleaning, all multi-use milk or milk product containers, utensils and equipment shall be transported and stored to assure complete drainage and shall be protected from contamination before use.

PUBLIC-HEALTH REASON

If containers and equipment are not protected from contamination, the value of sanitization may be partly or entirely nullified.

ADMINISTRATIVE PROCEDURES

This item is deemed to be satisfied when:

All multi-use containers, equipment and utensils, after cleaning, are transported and/or stored on racks made of impervious food grade materials, or in clean cases elevated above the floor. Containers shall be stored inverted on racks or in cases constructed of relatively nonabsorbent, impervious, food-grade, corrosion-resistant, nontoxic materials, or otherwise protected from contamination.

ITEM 14p. STORAGE OF SINGLE-SERVICE CONTAINERS, UTENSILS AND MATERIALS

Single-service caps, cap stock, parchment paper, containers, gaskets and other single-service articles for use in contact with milk and milk products shall be purchased and stored in sanitary tubes, wrappings or cartons; shall be kept therein in a clean, dry place until used; and shall be handled in a sanitary manner.

PUBLIC-HEALTH REASON

Soiled or contaminated caps, parchment paper, gaskets and single-service containers nullify the benefits of the safeguards prescribed throughout the *Ordinance*. Packing the caps in tubes which remain unbroken until they are placed in the bottling machine is the best method of assuring cap cleanliness.

ADMINISTRATIVE PROCEDURES

This item is deemed to be satisfied when:

1. Single-service caps, cap stock, parchment paper, containers, gaskets and other single-service articles for use in contact with milk and milk products are purchased and stored in sanitary tubes, wrappings or cartons; are kept in a clean, dry place until used; and are handled in a sanitary manner.
2. Paperboard shipping containers used to enclose plastic bags or unfilled containers are used only once unless other methods are employed to protect the containers from contamination.
3. Tubes or cartons are not refilled with spilled caps, gaskets or parchment papers.
4. Cartons or boxes from which contents have been partially removed are kept closed.
5. Suitable cabinets are provided for storage of tubes after removal from the large outer box, and for storage of opened cartons, unless other satisfactory means are employed to protect the caps, closures or containers.

ITEM 15p. PROTECTION FROM CONTAMINATION

Milk plant operations, equipment and facilities shall be located and conducted to prevent any contamination of milk or milk products, ingredients, equipment, containers and utensils. All milk or milk products or ingredients which have been spilled, overflowed or leaked shall be discarded. The processing or handling of products other than milk or milk products in the pasteurization plant shall be performed to preclude the contamination of such milk and milk products. The storage, handling and use of poisonous or toxic materials shall be performed to preclude the contamination of milk and milk products, or ingredients of such milk and milk products or the product-contact surfaces of all equipment, containers or utensils.

PUBLIC-HEALTH REASON

Because of the nature of milk and milk products and their susceptibility to contamination by bacteria, chemicals and other adulterants, every effort should be made to provide adequate protection for the milk and milk products at all times. Misuse of pesticides and other harmful chemicals can provide opportunities for contamination of the milk, milk product or equipment with which the milk or milk product comes in contact.

ADMINISTRATIVE PROCEDURES

This item is deemed to be satisfied when:

15p(A).

1. Equipment and operations are so located within the plant as to prevent overcrowding and contamination of cleaned and sanitized containers, equipment and utensils by splash, condensation or manual contact.

2. Packaged milk and milk products which have physically left the premises or the processing plant are not repasteurized for Grade "A" use. The regulatory agency may, on a specific individual request, authorize reprocessing of packaged milk and milk products, provided all other aspects of this item, including proper storage temperature and container integrity are complied with. *Provided*, that the repasteurization of milk and milk products shipped in transport milk tank trucks which have been pasteurized at another Grade "A" plant and have been handled in a sanitary manner and maintained at 7°C (45°F) or less is permitted. Equipment, designated areas or rooms utilized for storage, processing and handling of returned packaged milk and milk products are maintained, operated, cleaned and sanitized so as to preclude contamination of Grade "A" products and equipment and the Grade "A" operations.

3. All product-contact surfaces of containers, equipment and utensils are covered or otherwise protected to prevent the access of insects, dust, condensation and other contamination. All openings, including valves and piping attached to milk storage and milk tank trucks, pumps, vats, etc., shall be capped or otherwise properly protected. While unloading at a pasteurization plant, receiving station or

transfer station, one of the following conditions shall be met:

a. If the area is completely enclosed (walls and ceiling, with doors closed) during the unloading process and the dust-cover or dome and the manhole cover is opened slightly and held in this position by the metal clamps used to close the cover, then a filter is not required. However, if the dust-cover and/or manhole cover(s) are opened in excess of that provided by the metal clamps or the covers have been removed, then a suitable filter is required for the manhole.

b. If the area is not completely enclosed or doors of the unloading area are open during unloading, a suitable filter is required for the manhole or air inlet vent and suitable protection must be provided over the filter material either by design of the filter holding apparatus or a roof or ceiling over the area. When weather and environmental conditions permit, manhole openings and covers of milk tank trucks may be opened outdoors for the short period of time necessary for the collection of samples for animal drug residue screening. Direct connections from milk tank truck to milk tank truck must be made from valve to valve or through the manhole lid. *Provided*, that all connections are made ferrule to ferrule and adequate protection is provided for the air vent.

Receiving and dump vats shall be completely covered, except during washing and sanitizing, and when milk is being dumped. Where strainers are used, the cover for the vat opening shall be designed to cover the opening with the strainer in place.

4. Whenever air under pressure is used for the agitation or movement of milk, or is directed at a milk-contact surface, it is free of oil, dust, rust, excessive moisture, extraneous materials and odor, and shall otherwise comply with the applicable standards of Appendix H. The use of steam containing toxic substances is expressly prohibited. Whenever steam is used in contact with milk or milk products, it shall be of culinary quality and shall comply with the applicable standards of Appendix H.

5. Standardization of Grade "A" milk and milk products with other than Grade "A" milk and milk products is prohibited. This *Ordinance* permits standardization as a process of adjusting the milkfat of milk in a milk plant by the addition or removal of cream or non-fat (skim) milk.

6. All multi-use cases used to encase packaged milk and milk product containers are cleaned prior to their use.

7. All ingredients and non-product-contact materials used in the preparation or packaging of milk and milk products are stored in a clean place and are so handled as to prevent their contamination.

8. Pasteurized milk is not strained or filtered except through a perforated metal strainer.

9. Only those poisonous or toxic materials, including but not limited to insecticides, rodenticides, detergents, sanitizers, caustics, acids, related cleaning compounds and medicinal agents necessary for the maintenance of the dairy plant are present in the dairy plant.

10. Those poisonous or toxic materials that are necessary are not stored in any room where milk or milk products are received, processed, pasteurized or stored; or where equipment, containers or utensils are washed; or where single-service containers, closures or caps are stored.

11. Those poisonous or toxic materials that are necessary are stored in a separate area of the plant in prominently and distinctly labeled containers. *Provided* that, this does not preclude the convenient availability of detergents or sanitizers to areas where equipment, containers, and utensils are washed and sanitized.

12. Only insecticides and rodenticides approved by the regulatory agency and/or registered with the U.S. Environmental Protection Agency shall be used for insect and rodent control. Such insecticides and rodenticides shall be used only in accordance with the manufacturer's label directions and shall be prevented from contaminating milk, containers, equipment and utensils.

13. In the case of separating non-Grade "A" and Grade "A" products, a water rinse after processing non-Grade "A" and prior to Grade "A" is adequate separation, provided both are processed as Grade "A" and raw and pasteurized products are kept physically separated.

14. Grade "A" raw milk or milk products and non-Grade "A" raw products (dairy or non-dairy) shall be separated by one valve.

15. Grade "A" pasteurized milk or milk products and non-Grade "A" pasteurized products (dairy or non-dairy) shall be separated by one valve.

16. Except during the actual flushing of raw product lines and vessels with water, there shall be a sufficient separation between water piping and unpasteurized dairy products, or lines used to conduct unpasteurized dairy products, to prevent the accidental addition of water.

15p(B)

1. During processing, pipelines and equipment used to contain or conduct milk and milk products shall be effectively separated from tanks or circuits containing cleaning, and/or sanitizing solutions. This can be accomplished by:

a. Physically disconnecting all connection points between tanks or circuits containing cleaning and/or sanitizing solutions from pipelines and equipment used to contain or conduct milk or milk products, or

b. Separation of all connection points between such circuits by at least two automatically controlled valves with a drainable opening to the atmosphere between the valves, or by a single bodied double seat valve, with a drainable opening to the atmosphere between the seats, if:

(1) The opening to the atmosphere (vent) is equal to the largest pipeline feeding the valve(s).

(2) Both valves (or valve seats in the case of single bodied double seat valves) are position detectable, and capable of providing an electronic signal when not properly seated in the blocked position.

(3) These valves (or valve seats in the case of single bodied double seat valves) are part of an automatic failsafe system which will prevent contamination of product with cleaning or sanitizing solutions. Automatic fail safe systems will be unique to each particular installation but are normally based on the premise that both blocking valve seats are properly seated in the blocked position before the mechanical cleaning system can be activated for the cleaning circuit containing this valve arrangement.

(4) The system does not have any manual overrides.

(5) Controls for the fail safe system are secured as directed by the regulatory agency in order to prevent unauthorized changes.

(6) The vent is not cleaned until milk and milk products have been removed or isolated.

(7) Variations from the above specifications may be individually evaluated and found to also be acceptable if the level of protection is not compromised.

For example: In low pressure, gravity drain applications where the product line is the

same size or larger than the cleaning or sanitizing solution line; the vent may be the size of the solution line and the valves or valve seats need not be position detectable (all other criteria still apply). In order to accept this variation, the valve(s) must fail to the blocked position upon loss of air or power, and there must be no pumps capable of pushing milk, milk product, cleaning solutions, or sanitizing solutions into this valve arrangement.

IMPORTANT NOTE: The valve arrangement(s) described in this section shall not be used to separate raw products (dairy, non-dairy or water) from pasteurized milk or milk products.

2. Except as permitted in 16p there shall be no physical connection between unpasteurized products (dairy, non-dairy, or water) and pasteurized milk or milk products. Pasteurized non-dairy products or water not completely separated from pasteurized dairy products, shall be pasteurized at times and temperatures which meet at least the minimum times and temperatures provided for in Definition V or in the case of water have undergone an equivalent process found acceptable by FDA and the State Regulatory Authority.
This section does not require separate raw and pasteurized mechanical cleaning systems.

3. Pasteurized re-circulation lines, divert lines, and leak detect lines connecting to the raw product constant level supply tank shall be designed so that there is an air gap between the termination of these pipelines and the raw product overflow level. This air gap must be equivalent to at least two times the diameter of the largest of these pipelines. For purposes of this section an overflow is defined as the flood rim of the constant level supply tank or any unrestricted opening below the flood rim of the constant level supply tank which is large enough that it is at least equivalent to two times the diameter of the largest of these pipelines.

4. All milk and milk products which have overflowed, leaked, been spilled or improperly handled are discarded. Milk and milk products drained from processing equipment at the end of a run, collected from a defoamer system and milk solids rinsed from equipment, containers or pipelines shall be repasteurized only if such milk and milk products are handled in a sanitary manner and maintained at 7°C (45°F) or less. When the handling and/or refrigeration of such milk and milk products are not in compliance with this requirement, they shall be discarded. Milk and milk products from damaged, punctured or otherwise contaminated containers or product from out of code containers shall not be repasteurized for Grade "A" use.

5. Means are provided to prevent contamination of milk containers, utensils and equipment by drippings, spillage and splash from overhead piping, platforms or mezzanines.

6. The processing of foods and/or drinks other than Grade "A" milk and milk products are performed to preclude the contamination of such milk and milk products.

7. In no case shall pasteurized milk or milk products be standardized with unpasteurized milk unless the standardized product is subsequently pasteurized.

8. Reconstituted or recombined milk and milk products shall be pasteurized after reconstitution or recombining of all ingredients.

ITEM 16p. PASTEURIZATION AND ASEPTIC PROCESSING

Pasteurization shall be performed as defined in Section 1, Definition V of this *Ordinance*. Aseptic processing shall be performed in accordance with 21 CFR 113, (See Appendix L), 21 CFR 108 and the Administrative Procedures of Item 16p, C, D and E of this section.

PUBLIC-HEALTH REASON

The public health value of pasteurization is unanimously agreed upon by health officials. Long experience conclusively shows its value in the prevention of disease which may be transmitted through milk. Pasteurization is the only practical, commercial measure which, if properly applied to all milk, will destroy all milkborne disease organisms. Examination of lactating animals and milk handlers, while desirable and of great value, can be done only at intervals and; therefore, it is possible for pathogenic bacteria to enter the milk for varying periods before the disease condition is discovered. Disease bacteria may also enter milk accidentally from other sources, such as flies, contaminated water, utensils, etc. It has been demonstrated that the time-temperature combinations specified by this *Ordinance*, if applied to every particle of milk, will devitalize all milkborne pathogens. Compilations of outbreaks of milkborne disease by the U.S. Public Health Service, over many years, indicate that the risk of contracting disease from raw milk is approximately 50 times as great as from milk labeled "pasteurized".

A note of caution is in order. Although pasteurization devitalizes the organisms, it does not destroy the toxins that may be formed in milk when certain staphylococci are present (as from udder infections) and when the milk is not properly refrigerated before pasteurization. Such toxins may cause severe illness.

Numerous studies and observations clearly prove that the food value of milk is not significantly impaired by pasteurization.

ADMINISTRATIVE PROCEDURES

The pasteurization portion of this item is deemed to be satisfied when:

1. Every particle of milk or milk product is heated in properly designed and operated equipment to one of the temperatures specified in the following table and held continuously at or above that temperature for at least the time specified:

Table 3. Pasteurization Temperature vs. Time	
Temperature	Time
*63°C (145°F)	30 minutes
*72°C (161°F)	15 seconds
89°C (191°F)	1.0 second
90°C (194°F)	0.5 second
94°C (201°F)	0.1 second
96°C (204°F)	0.05 second
100°C (212°F)	0.01 second
*If the fat content of the milk product is 10 percent or more, or if it contains added sweeteners, the specified temperature shall be increased by 3°C (5°F). *Provided*, that eggnog shall be heated to at least the following temperature and time specifications:	
69°C (155°F)	30 minutes
80°C (175°F)	25 seconds
83°C (180°F)	15 seconds
Provided further, that nothing shall be construed as barring any other pasteurization process which has been recognized by the Food and Drug Administration to be equally efficient and which is approved by the regulatory agency.	

2. The design and the operation of pasteurization equipment and all appurtenances thereto shall comply with the applicable specifications and operational procedures of subitems (A), (B), (D) and (E) as follows:

ITEM 16p(A). BATCH PASTEURIZATION

All indicating and recording thermometers used in connection with the batch pasteurization of milk or milk products shall comply with the applicable specifications set forth in Appendix H. Specification for test thermometer and other test equipment appear in Appendix I.

PUBLIC-HEALTH REASON

Unless the temperature-control instruments and devices used on pasteurization equipment are accurate within known limits, there can be no assurance that the proper pasteurization temperature is being applied. Pasteurization must be performed in equipment which is properly designed and operated and which insures that every particle of milk or milk products will be held continuously at the proper temperature for the specified period of time.

Recording thermometers are the only known means for furnishing the regulatory agency with a record of the time and temperature of pasteurization. Experience has shown that recording thermometers, due to their mechanical complexity, are not entirely reliable. Therefore, mercury indicating thermometers, which are much more reliable, are needed to provide a check on the recording thermometer and assurance that proper temperatures are being applied.

The recording thermometer shows the temperature of the milk immediately surrounding its bulb, but cannot indicate the temperature of the milk in other portions of the holder. Similarly, it shows the holding time in manual-discharge vats, but not in automatic-discharge systems. The pasteurizer must; therefore, be so designed and so operated and, where necessary, provided with such automatic controls, as to assure that every portion of the milk will be subjected to the proper temperature for the required length of time.

Unless the inlet and outlet valves and connections to the vats and pockets are properly designed and operated, cold pockets of milk may be held in the outlet valve or pipeline; raw milk may leak into the vat or pocket during the holding or emptying time; and raw or incompletely pasteurized milk

may leak into the outlet line during the filling, heating or holding period.

Tests have shown that when foam is present on milk in vats or pockets during pasteurization, the temperature of the foam may be well below the pasteurization temperature. In such cases, pathogenic organisms, that may be in the foam, will not be killed. Experience indicates that some foam is present at some time in all vats, particularly at certain seasons. Furthermore, in filling vats, milk frequently is splashed on the surfaces and fixtures above the milk level, as well as on the underside of the vat cover. Droplets of this splash may drop back into the body of the milk, and since they may not have been at pasteurization temperature for the required time, they may contain living pathogenic organisms. Heating the air above the milk, above pasteurization temperature, remedies these conditions. When air heating is not provided, its need may frequently be demonstrated by swabbing milk from the upper vat walls and from the underside of the cover, at the end of the holding period, and running phosphatase tests on the swab samples.

Many plant operators have reported that the use of airspace heaters, especially with partly filled vats with un-insulated lids, makes it easier to maintain the milk at a uniform and sufficiently high temperature. It also helps to prevent the growth of thermophilic organisms and promotes easier cleaning.

Obviously, if the design and construction of pasteurization vats and pocket covers do not prevent leakage, condensation and the entrance of water and dust, the milk may become contaminated with material containing disease bacteria. Keeping the covers closed during operation will decrease the chance of dust, flies, sputum droplets, drip and splash entering the milk.

ADMINISTRATIVE PROCEDURES

1. TIME AND TEMPERA-TURE CONTROLS FOR BATCH PASTEURIZERS:

a. **Temperature Difference:** The pasteurizer shall be so designed that the simultaneous temperature difference between the milk or milk product, at the center of the coldest milk or milk product in the vat, will not exceed 0.5°C (1°F) at any time during the holding period.

The vat shall be provided with adequate agitation, operating throughout the holding period. No batch of milk or milk product shall be pasteurized unless it covers a sufficient area of the agitator to insure adequate agitation.

b. **Location and Required Readings of Indicating and Recording Thermometers:** Each batch pasteurizer shall be equipped with both an indicating and a recording thermometer.

The thermometer shall read not less than the required pasteurization temperature throughout the required holding period. The plant operator shall check the temperature shown by the recording thermometer against the temperature shown by the indicating thermometer at the start of the holding period. This comparison shall be noted on the recording thermometer chart. The recording thermometer shall not read higher than the indicating thermometer. No batch of milk or milk products shall be pasteurized unless it is sufficient to cover the bulbs of both the indicating and the recording thermometer.

c. **Assurance of Minimum Holding Periods:** Batch pasteurizers shall be so operated that every particle of milk or milk product will be held at not less than the minimum pasteurization temperature continuously for at least 30 minutes. When milk or milk products are raised to

pasteurization temperature in the vat, and cooling is begun in the vat simultaneously with or before the opening of the outlet valve, the recorder chart shall show at least 30 minutes, at not less than minimum pasteurization temperature. When milk or milk products are preheated to pasteurization temperature before entering the vat, the recorder chart shall show a holding period of at least 30 minutes, at not less than the minimum pasteurization temperature plus the time of filling from the level of the recorder bulb. When cooling is begun in the holder, after the opening of the outlet valve or is done entirely outside the holder, the chart shall show at least 30 minutes at not less than the minimum pasteurization temperature plus the time of emptying to the level of the recording-thermometer bulb.

When the recorder time interval on the recorder chart at the pasteurization temperature includes filling and/or emptying time, such intervals shall be indicated on the recorder chart, by the operator, by removing the recording-thermometer bulb from the milk for a sufficient time to depress the pen; or by turning cold water into the vat jacket at the end of the holding period; or by inscribing the holding time on the chart. The filling time and the emptying time for each holder, so operated, shall be determined by the regulatory agency, initially and after any change which may affect these times.

No milk shall be added to the holder after the start of the holding period.

2. **AIRSPACE HEATING:**

a. Means shall be provided and used in batch pasteurizers to keep the atmosphere above the milk and milk products at a temperature not less than 3°C (5°F) higher than the minimum required temperature of pasteurization, during the holding period (Appendix H).

b. Each batch pasteurizer shall be equipped with an airspace thermometer. The surface of the milk or milk product shall be at least 25 millimeters (1 inch) below the bottom of the thermometer bulb when the vat is in operation.

c. The temperature shown by the airspace thermometer shall be recorded on the recording thermometer chart at the start of the holding period and at the end of the holding period, at a given time or reference point as indicated on the chart.

3. **INLET AND OUTLET VALVES AND CONNECTIONS:**

The following definitions shall apply to inlet and outlet valves and connections:

a. **"Valve stop"** shall mean a guide which permits turning the valve plug to, but not beyond, the fully closed position.

b. **"The fully open position"** shall mean that position of the valve seat which permits the maximum flow into or out of the pasteurizer.

c. **"The closed position"** shall mean any position of the valve seat which stops the flow of milk into or out of the pasteurizer.

d. **"The fully closed position"** shall mean that closed position of the valve seat which requires the maximum movement of the valve to reach the fully open position.

e. **"The just-closed position"** shall mean that closed position of a plug-type valve in which the flow into or out of the holder is barely stopped, or any position within 2 millimeters (0.078 inch) thereof as measured along the maximum circumference of the valve seat.

f. **"Leakage"** shall mean the entrance of unpasteurized milk into a batch pasteurizer during the holding or emptying

period, or the entrance of unpasteurized milk into any pasteurized milk line at any time.

g. **"Leak-protector valve"** shall mean a valve provided with a leak-diverting device, which, when the valve is in any closed position, will prevent leakage of milk past the valve.

h. **"Close-coupled valve"** shall mean a valve, the seat of which is either flush with the inner wall of the pasteurizer or so closely coupled that no milk in the valve inlet is more than 0.5°C (1°F) colder than the milk at the center of the pasteurizer at any time during the holding period.

A close-coupled valve which is not truly flush, shall be considered as satisfying this requirement when:

(1) The vat outlet is so flared that the smallest diameter of the large end of the flare is not less than the diameter of the outlet line, plus the depth of the flare; and

(2) The greatest distance from the valve seat to the small end of the flare is not greater than the diameter of the outlet line; and

(3) In the case of batch pasteurizers, the outlet and the agitator are so placed as to insure that milk currents will be swept into the outlet.

4. DESIGN AND INSTALLATION OF VALVES AND CONNECTIONS:

All valves and connections shall comply with the following requirements:

a. Valves and pipeline connections shall meet the requirements of Item 10p.

b. All pipelines and fittings shall be so constructed and so located that leakage will not occur.

c. To prevent clogging, and to promote drainage, all leak-protection grooves shall be at least 5 millimeters (0.187 inch wide) and at least 2.3 millimeters (0.094 inch) deep at the center. Mating grooves shall provide these dimensions throughout their combined length, whenever the valve is in, or approximately in, the fully closed position. All single-leak grooves, and all mating leak grooves when mated, shall extend throughout the entire depth of the seat, so as to divert leakage occurring at all points throughout the depth of the seat and so as to prevent air binding. Washers or other parts shall not obstruct leak-protector grooves.

d. A stop shall be provided on all plug-type outlet valves in order to guide the operator in closing the valve so that unpasteurized milk may not inadvertently be permitted to enter the outlet line. The stop shall be so designed that the plug will be irreversible when the plug is provided with any grooves or their equivalent, unless duplicate, diametrically opposite grooves are also provided. Stops shall be so designed that the operator cannot turn the valve beyond the stop position, either by raising the plug or by any other means.

e. Outlet valves, in addition to the requirements listed above, shall be so designed as to prevent the accumulation of unpasteurized milk in the milk passages of the valve when the valve is in any closed position.

f. All outlets from vat pasteurizers shall be equipped with close coupled leak-protector valves or be otherwise similarly protected during filling, holding and emptying periods.

g. All inlet pipelines are disconnected or otherwise similarly protected during the holding and emptying periods.

h. All leak protector valves shall be installed in the proper position to insure the function of the leak-protector groves and the drainage of the leak detector valve.

i. All outlet valves shall be kept fully closed during filling, heating, and holding periods.

j. Close coupled vat pasteurizer outlet valve bodies and plugs shall be made of stainless steel or of other materials that have heat transfer properties at least equal to stainless steel.

5. RECORDING CHARTS

All recording thermometer charts shall comply with all the applicable requirements of Item 16p(E), p. .

ITEM 16p(B). HIGH-TEMPERATURE, SHORT-TIME, (HTST) CONTINUOUS-FLOW PASTEURIZATION

PUBLIC-HEALTH REASON

See Public-Health Reason under Item 16p and 16p(A).

ADMINISTRATIVE PROCEDURES

1. **INDICATING THERMOMETER AND RECORDER/CONTROLLER INSTRUMENTS:** All indicating thermometers and recorder/controller instruments and devices used in connection with the high-temperature, short-time, continuous-flow pasteurization of milk or milk products shall comply with the applicable specifications set forth in Appendix H.

2. **AUTOMATIC MILK CONTROLLER:** Each high-temperature, short-time, continuous-flow pasteurization system shall be equipped with an automatic milk-flow control of the diversion type, which complies with the following definition, specifications and performance requirements:

a. **"Automatic Milk-Flow Controls."--**The term "automatic milk-flow controls" shall mean those safety devices which control the flow of milk in relation to the temperature of the milk, or heating medium and/or pressure, vacuum or other auxiliary equipment. Milk-flow controls shall not be considered as part of the temperature control equipment. Milk-flow controls shall be of the flow-diversion type which automatically cause the diversion of the milk in response to a sub-legal pasteurization temperature. At sublegal temperatures, flow-diversion devices return the milk to the raw milk side of the heating system continuously until legal pasteurization temperatures are obtained, at which time, the device restores forward flow through the pasteurizer.

b. **Flow-Diversion Devices:** All flow-diversion devices used in continuous pasteurizers shall comply with the following or equally satisfactory specifications:

(1) Forward flow of sub-temperature milk, due to the omission or looseness of the connecting clip, shall be prevented by making the valve and its actuating mechanism integral; or, where there is a connecting device, by making it impossible to assemble the valve and its actuating mechanism, except in such manner that it will function properly; or where there is a connecting device which may be omitted or shaken loose by providing for pushing instead of pulling, the valve to the diverted position; or by providing that the pump will shut down when the milk is below the pasteurization temperature and the valve is not in the fully-diverted position; or by any other equally satisfactory means.

(2) When a packing gland is used to prevent leakage around the actuating stem, it shall be impossible to tighten the stem packing nut to such an extent as to prevent the valve from assuming the fully-diverted position.

(3) A leak escape shall be installed on the forward-flow side of the valve seat. However, when back pressure is exerted on the forward-flow side of the valve seat, while the milk-flow is being diverted, the leak escape should lie between two valve seats or between two portions of the same seat, one upstream and the other downstream from the leak escape. The leak escape shall be designed and installed to discharge all leakage to the outside, or to the constant-level tank through a line separate from the diversion line. *Provided*, that when leakage is discharged to the constant-level tank, a sight glass shall be installed in the leak escape line to provide a visual means of leak detection.

(4) The closure of the forward-flow seat shall be sufficiently tight so that leakage past it will not exceed the capacity of the leak escape device, as evidenced when the forward-flow line is disconnected; and, in order that proper seating may not be disturbed, the length of the connecting rod shall not be adjustable by the user.

(5) The flow-diversion device shall be so designed and installed that failure of the primary motivating power shall automatically divert the flow of milk.

(6) The flow-diversion device shall be located downstream from the holder. The flow-control sensor shall be located in the milk line not more than 46 centimeters (18 inches) upstream from the flow-control device.

(7) In the case of higher-heat, shorter-time (HHST) pasteurizing systems utilizing the temperatures of 89°C (191°F) and above and holding times of 1 second or less, the flow-diversion device may be located downstream from the regenerator and/or cooler section. *Provided*, that when the flow-diversion device is located downstream from the regenerator and/or cooler section, the flow-diversion device shall be automatically prevented from assuming the forward-flow position until all product-contact surfaces between the holding tube and flow-diversion device have been held at or above the required pasteurization temperature continuously and simultaneously for at least the required pasteurization time as defined in Definition V of this *Ordinance*.

(8) The pipeline from the diversion port of the flow-diversion device shall be self-draining and shall be free of restrictions or valves, unless such restrictions are noticeable and valves are so designed that stoppage of the diversion line cannot occur.

(9) When it is used, the pipeline from the leak detector port of the flow-diversion device shall be self-draining and shall be free of restrictions or valves.

(10) The flow-diversion device shall be interwired, via micro-switches to the timing pump or timing system, to insure that flow occurs only when the valve(s) are in the fully divert position at below cut-in temperature. A one second maximum "off" time delay is allowable to maintain the flow-promoting device in the "on" position through the travel time of the valve(s).

(11) If the area between the divert and detect valve seats is not self draining when the flow-diversion device is in the diverted position, a delay of at least one second and not more than five seconds is required between the movement of the divert and detect valves when the flow-diversion device assumes the forward flow position. Except that: the delay may be longer than five seconds if; the timing system is magnetic flow meter based; or if the holding time in diverted flow through an unrestricted divert valve line is longer than the required pasteurization time as specified in Definition V of this *Ordinance*; and except that, no time delay is required in pasteurization systems in which the flow-

diversion device is located down stream from the pasteurized regenerator and in which all forward flow product-contact surfaces of the flow-diversion device are sanitized (or sterilized) during the normal startup process.

c. **Milk-Flow Controller Instrumentation:** The following requirements shall be met with respect to the instrumentation of the milk-flow controller:

(1) The thermal limit controller shall be set and sealed so that forward flow of product cannot start unless the temperature at the controller sensor is above the required pasteurization temperature as defined in Definition V of this *Ordinance* for the milk or milk product and the process used, nor continue during descending temperatures when the temperature is below the required pasteurization temperature. The seal shall be applied by the regulatory agency after testing, and shall not be removed without immediately notifying the regulatory agency. The system shall be so designed that no milk can be bypassed around the controller sensor which shall not be removed from its proper position during the pasteurization process. The cut-in and cut-out milk temperatures, as shown by the indicating thermometer, shall be determined at the beginning of each day's operation and entered upon the recorder chart daily by the plant operator.

(2) In the case of HHST pasteurization systems, utilizing the temperatures of 89°C (191°F) and above, and holding times of 1 second or less, with the flow-diversion device located downstream from the regenerator and/or cooler section, additional temperature controllers and timers shall be inter-wired with the thermal limit controller, and the control system shall be set and sealed so that forward flow of product cannot start until all product-contact surfaces between the holding tube and flow-diversion device have been held at or above the required pasteurization temperature, continuously and simultaneously for at least the required pasteurization time as defined in Definition V of this *Ordinance*. The control system shall also be set and sealed so that forward flow cannot continue when the temperature of the product in the holding tube is below the required pasteurization temperature. The seal shall be applied by the regulatory agency after the equipment has been tested, and shall not be removed without immediately notifying the regulatory agency. The system shall be so designed that no product can be bypassed around the control sensors, which shall not be removed from their proper position during the pasteurization process. For these HHST systems, daily measurement by the operator of the cut-in and cut-out temperatures is not required.

(3) Manual switches for the control of pumps, homogenizers or other devices which produce flow through the holder, shall be wired so that the circuit is completed only when the milk is above the required pasteurization temperature as defined in Definition V of this *Ordinance* for the milk or milk product and the process used, or when the diversion device is in the fully-diverted position.

d. **Holding Tube:**

(1) Holders shall be designed to provide for the holding of every particle of milk or milk product for at least the time required in Definition V of this *Ordinance* for the milk or milk product and the process used.

(2) The holder shall be so designed that the simultaneous temperature difference between the hottest and coldest milk, in any cross section of flow, at any time during the holding period, will not be greater than 0.5°C (1°F). This requirement may be assumed to have been satisfied, without testing, in tubular holders of 17.8 centimeters (7 inches) or smaller diameter

which are free of any fittings through which the milk may not be thoroughly swept.

(3) No device shall be permitted for short circuiting a portion of the holder to compensate for changes in rate of milkflow. Holding tubes shall be installed so that sections of pipe cannot be left out, resulting in a shortened holding time.

(4) The holding tube shall be arranged to have a continuously upward slope in the direction of flow of not less than 2.1 centimeters per meter (0.25 inch per foot).

(5) Supports for tubes shall be provided to maintain all parts of the holding tubes in a fixed position, free from any lateral or vertical movement.

(6) The holder shall be so designed that no portion between the inlet and the flow-control temperature sensor is heated.

(7) The holding time for the HHST processes must be determined from the pumping rate rather than by the salt conductivity test, because of the short holding tube. The holding tube length must be such that the fastest flowing particle, of any product, will not traverse the holding tube in less than the required holding time. Since laminar flow (the fastest flowing particle travels twice as fast as the average flowing particle) can occur in the holding tube during pasteurization of high-viscosity products, holding tube lengths are calculated as twice the length required to hold the average flow for the time standard.

(8) With the direct steam heating processes, the holding time is reduced because the product volume increases as the steam condenses to water during heating in the injector. This surplus water is evaporated as the pasteurized product is cooled in the vacuum chamber. For example, with a 66°C (120°F) increase by steam injection, which is probably the maximum temperature rise that will be used, a volume increase of 12 percent will occur in the holding tube. The measurement of the average flow rate, at the discharge of the pasteurizer, does not reflect this volume increase in the holding tube. However, this volume increase, i.e., holding time decrease, must be considered in the calculations.

(9) The pressure limit indicator/pressure switch must be interwired so that the flow-diversion device will move to the divert position if the product pressure falls below a prescribed value. For operating temperatures between 89°C (191°F) and 100°C (212°F) the instrument must be set at 69 kPa (10 pounds per square inch) (psi). For units which have operating temperatures above 100°C (212°F) the instrument must be set at a pressure 69 kPa (10 psi) above the boiling pressure of the product, at its maximum temperature in the holding tube. If this pressure is too low, the resultant vaporization in the holding tube will substantially reduce residence times.

(10) With the steam injection process, a differential pressure limit indicator across the injector is needed to ensure adequate isolation of the injection chamber. The instrument must have a differential pressure switch so that the flow-diversion device will move to the divert position if the pressure drop across the injector falls below 69 kPa (10 psi).

e. **Indicating and Recording Thermometers:**

(1) An indicating thermometer shall be located as near as practicable to the temperature sensor of the recorder/controller, but may be located a short distance upstream from the latter where milk between the two thermometers does not differ significantly in temperature.

(2) The temperature shown by the recorder/controller shall be checked daily by the plant operator against the temperature shown by the indicating thermometer. Readings shall be recorded on the chart. The recorder/controller shall be

adjusted to read no higher than the indicating thermometer.

(3) The recorder/controller charts shall comply with the applicable provisions of Item 16p(E).

f. **Flow-Promoting Devices:**

(1) The pump, or pumps and other equipment which may produce flow through the holder shall be located upstream from the holder, provided that pumps and other flow-promoting devices may be located downstream from the holder, if means are provided to eliminate negative pressure between the holder and the inlet to such equipment. When vacuum equipment is located downstream from the holder, an effective vacuum breaker, plus an automatic means of preventing a negative pressure in the line between the flow-diversion device and the vacuum chamber, shall be acceptable.

(2) The speed of pumps or other flow-promoting devices, governing the rate of flow through the holder, shall be so controlled as to insure the holding of every particle of milk for at least the time required as defined in Definition V of this *Ordinance* for the milk or milk product and the process used. In all cases, the motor shall be connected to the metering pump by means of a common drive shaft, or by means of gears, pulleys, or a variable-speed drive, with the gear box, the pulley box or the setting of the variable speed protected in such a manner that the holding time cannot be shortened without detection by the regulatory agency. This shall be accomplished by the application of a suitable seal(s) after being tested by the regulatory agency and such seal shall not be broken without immediately notifying the regulatory agency. This provision shall apply to all homogenizers used as timing pumps. Variable speed drives, used in connection with the metering pump, shall be so constructed that wearing or stretching of the belt results in a slowdown, rather than a speedup, of the pump.

The metering or timing pump shall be of the positive displacement type or shall comply with the specifications for magnetic flow meter systems as outlined in Appendix H. Timing pumps and homogenizers, when used as a timing pump, shall not have by-pass lines connected from their outlet pipelines to their inlet pipelines during processing if an additional flow-promoting or vacuum producing device is located within the system. When a homogenizer is used in conjunction with a timing pump it shall be either:

(i) Of larger capacity than the timing pump. In which case an unrestricted, open, recirculation line shall be used to connect the outlet pipeline from the homogenizer to its inlet line. The recirculation line must be of at least the same or larger diameter than the inlet pipeline feeding product to the homogenizer. A check valve, allowing flow from the outlet line to the inlet line, may be used in the recirculating line provided it is of the type which provides a cross-sectional area at least as large as the recirculating line.

(ii) Of smaller capacity than the timing pump. In which case a relief line and valve shall be used. Such relief line shall be located after the timing pump and before the inlet to the homogenizer and shall return product to the balance tank or to the outlet of the balance tank, upstream of any booster pump or other flow-promoting device.

For those systems which do not homogenize all products and wish to utilize a by-pass line to by-pass the homogenizer while processing such product; the by-pass line must be connected with valves which are so designed that both lines cannot be open at the same time. This may be accomplished with 3-way plug valves with properly designed and operating pins or

other automatic, fail-safe valves which accomplish the same objective.

(3) The holding time shall be taken to mean the flow time of the fastest particle of milk, at or above the required pasteurization temperature as defined in Definition V of this *Ordinance* for the milk or milk product and the process used, throughout the holder section; i.e., that portion of the system that is outside of the influence of the heating medium, and slopes continuously upward in the downstream direction and is located upstream from the flow-diversion device. Tests for the holding time shall be made when all equipment and devices are operated and adjusted to provide for maximum flow. When a homogenizer is located upstream from the holder, the holding time shall be determined with the homogenizer in operation with no pressure on the homogenizer valves.

For those systems which do not homogenize all products and utilize by-pass lines as outlined in (i) above, the holding time shall be tested in both flow patterns and the fastest time used. The holding time shall be tested during both forward and diverted flow. If it is necessary to lengthen the holding time during diverted flow, an identifiable restriction may be placed in the vertical portion of the diversion pipeline. When vacuum equipment is located downstream from the holder, the holding time shall be tested with the metering pump operating at maximum flow and the vacuum equipment adjusted to provide for the maximum vacuum.

The holding time shall be tested in both forward and diverted flow by the regulatory agency initially; semiannually thereafter; after any alteration or replacement that may affect the holding time; and whenever the seal of the speed setting has been broken.

g. **Heating by Direct Addition of Steam:** Steam injection is an inherently unstable process; accordingly, when steam is injected into a fluid, condensation of the steam may not be completed inside the injector unless the proper design criteria are used. Lack of complete condensation inside the injector would cause temperature variations in the holding tube that could lead to some product particles being processed below pasteurization temperature. When culinary steam is introduced directly into milk or milk products, as the means of terminal heating to achieve pasteurization temperature, the steam injector shall be designed, installed and operated to comply with the following or equally satisfactory specifications:

(1) The product and steam flows must be isolated from pressure fluctuations inside the injection chamber. One method of isolation is to insert supplementary orifices on the product inlet and the heated product outlet of each injector. The two supplementary orifices must be sized for at least a 69 kPa (10 psi) product pressure drop across the injector during a simulation of normal operations. Excessive vibrations, pressure fluctuations or erratic noise levels indicate an unstable steam injection system and a need to check the isolation of the injection chamber.

(2) The process should be as free as possible of noncondensable gases that may evolve from the product or be carried in the steam supply. Any two-phase flow caused by the noncondensable gases would displace the product in the holding tube, resulting in reduced residence times. In addition, these gases in the steam supply may also markedly alter the condensation mechanism at the point of injection. Accordingly, the steam boiler shall be supplied with a de-aerator. The de-aerator will aid in keeping the product in the holding tube as free as possible of noncondensable gases.

h. **Prevention of Product Adulteration With Added Water:**

(1) When culinary steam is introduced directly into the milk or milk product downstream from the flow-diversion device, means shall be provided to preclude the addition of steam to the product, unless the flow-diversion device is in the forward-flow position. This provision may be satisfied by the use of an automatic steam control valve with a temperature sensor located downstream from the steam inlet, or by the use of an automatic solenoid valve installed in the steam line and so wired through the flow-diversion device controls, so that steam cannot flow unless the flow-diversion device is in the forward-flow position.

(2) When culinary steam is introduced directly into the milk or milk product, automatic means (e.g., stand-alone and/or PLC-based ratio control system) shall be provided to maintain a proper temperature differential between incoming and outgoing milk to preclude dilution with water.

(3) Where a water feed line is connected to a vacuum condenser and the vacuum condenser is not separated from the vacuum chamber by a physical barrier, means shall be provided to preclude the backup and overflow of water from the vacuum condenser to the vacuum chamber. This provision may be satisfied by the use of a safety shutoff valve, located on the water feed line to the vacuum condenser, which is automatically actuated by a control which will shut off the in-flowing water, if for example, the condensate pump stops and the water level rises above a predetermined point in the vacuum condenser. This valve may be actuated by water, air or electricity and shall be so designed that failure of the primary motivating power will automatically stop the flow of water into the vacuum condenser.

ITEM 16p(C). ASEPTIC PROCESSING SYSTEMS

PUBLIC HEALTH REASON

Aseptically processed milk and milk products are being packaged in hermetically sealed containers and stored for long periods of time under nonrefrigerated conditions. These conditions are favorable to the growth of many types of bacteria. (Pathogenic, toxin producing and spoilage organisms.) Because of this, every precaution must be taken to ensure that all viable organisms and their spores are destroyed by the chosen heat process, for the particular milk or milk product, and that the subsequent handling, packaging and storage processes do not provide an opportunity for recontamination of the product. The selected process must conform to the acceptable requirements for low acid canned foods.

ADMINISTRATIVE PROCEDURES

Aseptic Processing Systems

The aseptic processing portion of this Item is deemed to be satisfied when the design and operation of aseptic processing systems comply with the applicable specifications and operational procedures of subitems (C), (D) and (E) as follows:

Provided, that nothing shall be construed as barring any other aseptic processing system which have been recognized by the Food and Drug Administration to be equally effective and which is approved by the regulatory agency.

1. **INDICATING THERMOMETERS AND RECORDER/-CONTROLLER INSTRUMENTS:** All indicating thermometers, recorder/controller instruments and devices, used in connection with aseptic processing systems, used for the aseptic processing of milk or milk products shall comply with the applicable specifications set forth in Appendix H.

2. **ASEPTIC PROCESSING EQUIPMENT:**

a. **Temperature Indicating Device--** Each aseptic processing system shall be equipped with at least one mercury-in-glass thermometer or an equivalent temperature-indicating device.

b. **Temperature Recorder-Controller--** An accurate temperature recorder/controller shall be installed in the product at the holding-tube outlet and before the inlet to the cooler or regenerator. The following requirements shall be met with respect to the instrumentation of the temperature recorder/controller.

(1) The temperature recorder/controller shall be set and sealed so that during product processing the forward flow of product cannot start unless the temperature at the controller sensor is above the required temperature for the product and the process used, nor continue during descending temperatures when the temperature is below the required temperature.

The seal shall be applied by the regulatory agency after testing and shall not be removed without immediately notifying the regulatory agency. The system shall be so designed that no product can be bypassed around the controller sensor which shall not be removed from its proper position during the processing of aseptic milk and milk products.

(2) Additional temperature controllers and timers shall be interwired with the thermal limit controller, and the control system shall be set and sealed so that forward flow of product cannot start until all product-contact surfaces between the holding tube and flow-diversion device have been held at or above the required sterilization temperature, continuously and simultaneously for at least the required sterilization time. The control system shall also be set and sealed so that forward flow cannot continue when the temperature of the product in the holding tube is below the required temperature. The seal shall be applied by the regulatory agency after being tested and shall not be removed without immediately notifying the regulatory agency. The system shall be so designed that no product can be bypassed around the control sensors, which shall not be removed from their proper position during the processing of aseptic milk and milk products.

(3) Manual switches for the control of pumps, homogenizers or other devices which produce flow through the holder, shall be wired so that the circuit is completed only when the milk is above the required temperature for the product and the process used, or when the diversion device is in the fully-diverted position.

c. **Metering Pump:**

(1) A metering pump shall be located upstream from the holding tube and shall be operated to maintain the required rate of product flow. The motor shall be connected to the metering pump by means of a common drive shaft, or by means of gears, pulleys or a variable-speed drive, with the gear box, the pulley box or the setting of the variable speed protected in such a manner that the hold time cannot be shortened without detection by the regulatory agency. This shall be accomplished by the application of a suitable seal(s) after being tested by the regulatory agency and such seal shall not be broken without

immediately notifying the regulatory agency. This provision shall apply to all homogenizers used as timing pumps. Variable speed drives, used in connection with the metering pump, shall be so constructed that wearing or stretching of the belt results in a slowdown, rather than a speedup, of the pump. The metering or timing pump shall be of the positive displacement type or shall comply with the specifications for magnetic flow meter systems.

(2) The holding time shall be taken to mean the flow time of the fastest particle of product throughout the holder section; i.e., that portion of the system that is outside of the influence of the heating medium; and slopes continuously upward in the downstream direction; and is located upstream from the flow-diversion device. Tests for holding time shall be made when all equipment and devices are operated and adjusted to provide for maximum flow. When a homogenizer is located upstream from the holder, the holding time shall be determined with the homogenizer in operation with no pressure on the homogenizer valves. Where bypass lines are provided, either upstream or downstream from the metering pump, the holding time shall be tested with both the regular and bypass line open, unless the bypass valve is so designed that both lines cannot be open at the same time. When vacuum equipment is located downstream from the holder, the holding time shall be tested with the metering pump operating at maximum flow and the vacuum equipment adjusted to provide for maximum vacuum. The holding time shall be tested by the regulatory agency initially; semiannually thereafter; after any alteration or replacement that may affect the holding time; and whenever the seal of the speed setting has been broken.

d. **Product Holding Tube:**

(1) The product holding tube shall be designed to give continuous holding of every particle of product for at least the minimum holding time specified in the scheduled process. The holding tube shall be designed, so that no portion of the tube between the product inlet and the product outlet can be heated and it must be sloped upward at least 2.1 centimeters per meter (0.25 inch) per foot. Supports for tubes shall be provided to maintain all parts of the holding tubes in a fixed position, free from any lateral or vertical movement.

(2) No device shall be permitted for short circuiting a portion of the holder to compensate for changes in rate of production flow. Holding tubes shall be installed so that sections of pipe cannot be left out, resulting in a shortened holding time. The holding time for the processes must be determined from the pumping rate, rather than by the salt conductivity test.

(3) The holding tube length must be such that the fastest flowing particle of any product will not traverse the holding tube in less than the required holding time.

NOTE: Since laminar flow (the fastest flowing particle travels twice as fast as the average flowing particle) can occur in the holding tube during aseptic processing of high-viscosity products, holding tube lengths are calculated as twice the length required to hold the average flow for the time standard. With the steam injection process, the holding time is reduced because the product volume increases as the steam condenses to water during heating in the injector. This surplus water is evaporated as the aseptically processed product is cooled in the vacuum chamber. For example, with a 66°C (120°F) increase by steam injection, which is probably the maximum temperature rise that will be used, a volume increase of 12 percent will occur in the holding tube. The measurement of the average flow rate at

the discharge of the aseptic processor does not reflect this volume increase in the holding tube. However, this volume increase, i.e., holding time decrease, must be considered in the calculations.

(4) An aseptic processing system which can operate with product in forward flow mode, with less than 518 kPA (75psig) pressure in the holding tube shall be equipped with a pressure limit indicator/pressure switch in the holding tube to assure that the heated product remains in the liquid phase. In systems which do not have a vacuum chamber between the holding tube and the aseptic product side of the regenerator, this can be established by verifying that the aeptic processing equipment cannot operate in forward flow with less than 518 kPa (75psig) pressure on the aseptically processed side of the regenerator (see PMO test 9). The pressure limit indicator/pressure switch must be interwired so that the flow-diversion device, product divert system, product divert valve or other acceptable control system will move to the divert position, if the product pressure falls below a prescribed value. The instrument must be set at a pressure 69 kPa (10 psi) above the boiling pressure of the product at its maximum temperature in the holding tube. If this pressure is too low, the resultant vaporization in the holding tube will substantially reduce residence times.

(5) With the steam injection process, a differential pressure limit indicator, across the injector, is needed to ensure adequate isolation of the injection chamber. The instrument must have a differential pressure switch so that the flow-diversion device will move to the divert position if the pressure drop across the injector falls below 69 kPa (10 psi).

e. **Heating by Direct Addition of Steam:** Steam injection is an inherently unstable process; accordingly, when steam is injected into a fluid, condensation of the steam may not be completed inside the injector unless the proper design criteria are used. Lack of complete condensation inside the injector would cause temperature variations in the holding tube, that could lead to some product particles being processed below filed process temperature. When culinary steam is introduced directly into milk or milk products, as the means of terminal heating to achieve aseptic processing temperature, the steam injector shall be designed, installed and operated to comply with the following or equally satisfactory specifications:

(1) The product and steam flows must be isolated from pressure fluctuations inside the injection chamber. One method of isolation is to insert supplementary orifices on the product inlet and the heated product outlet of each injector. The two supplementary orifices must be sized for at least a 69 kPa (10 psi) product pressure drop across the injector during a simulation of normal operations. Excessive vibrations, pressure fluctuations or erratic noise levels indicate an unstable steam injection system and a need to check the isolation of the injection chamber.

(2) The process should be as free as possible of noncondensable gases that may evolve from the product or be carried in the steam supply. Any two-phase flow, caused by the noncondensable gases, would displace the product in the holding tube, resulting in reduced residence times. In addition, these gases in the steam supply may also markedly alter the condensation mechanism at the point of injection. Accordingly, the steam boiler shall be supplied with a de-aerator. The de-aerator will aid in keeping the product in the holding tube as free as possible of noncondensable gases.

f. **Prevention of Product Adulteration With Added Water:**

(1) When culinary steam is introduced directly into the milk or milk

product, automatic means (e.g., stand-alone and/or PLC-based ratio control system) shall be provided to maintain a proper temperature differential between incoming and outgoing milk to preclude dilution with water.

(2) Where a water feed line is connected to a vacuum condenser and the vacuum condenser is not separated from the vacuum chamber by a physical barrier, means shall be provided to preclude the back-up and overflow of water from the vacuum condenser to the vacuum chamber. This provision may be satisfied by the use of a safety shutoff valve, located on the water feed line to the vacuum condenser, which is automatically actuated by a control, which will shut off the in-flowing water, if for example, the condensate pump stops and the water level rises above a predetermined point in the vacuum condenser. This valve may be actuated by water, air or electricity and shall be so designed that failure of the primary motivating power will automatically stop the flow of water into the vacuum condenser.

g. **Flow-Diversion Device:** All flow-diversion devices used in continuous aseptic process systems shall comply with 16p(B).2.b. or equally satisfactory specifications.

ITEM 16p(D). PASTEURIZERS AND ASEPTIC PROCESSING SYSTEMS EMPLOYING REGENERATIVE HEATING

PUBLIC HEALTH REASON

To prevent contamination of the pasteurized milk in regenerators, the raw milk must always be under less pressure than the pasteurized milk or the heat-transfer medium. In the case of milk-to-milk regenerators, this requirement is necessary to prevent contamination of the pasteurized product by the raw milk if flaws should develop in the metal or in the joints separating the two kinds of milk.

ADMINISTRATIVE PROCEDURES

Milk-to-Milk Regenerative Heating

Pasteurizers and aseptic processing systems employing milk-to-milk regenerative heating with both sides closed to the atmosphere shall comply with the following or equally satisfactory specifications:

1. Regenerators shall be constructed, installed and operated so that pasteurized or aseptic product in the regenerator will automatically be under greater pressure than raw milk in the regenerator at all times.

2. The pasteurized or aseptic product, between its outlet from the regenerator and the nearest point downstream open to the atmosphere, shall rise to a vertical elevation of 30.48 centimeter (12 inches) above the highest raw milk level, downstream from the constant-level tank, and shall be open to the atmosphere at this or a higher elevation.

3. The overflow of the top rim of the constant level raw milk tank shall always

be lower than the lowest milk level in the regenerator.

4. No pump or flow-promoting device which can affect the proper pressure relationships within the regenerator shall be located between the pasteurized or aseptic product outlet from the regenerator and the nearest downstream point open to the atmosphere.

5. No pump shall be located between the raw milk inlet to the regenerator and the raw milk supply tank, unless it is designed and installed to operate only when milk is flowing through the pasteurized or aseptic product side of the regenerator and when the pressure of the pasteurized or aseptic product is higher than the maximum pressure produced by the pump. This may be accomplished by wiring the booster pump so that it cannot operate unless:

a. The metering pump is in operation;

b. The flow-diversion device is in forward-flow position; and

c. The pasteurized or aseptic product pressure exceeds, by at least 6.9 kPa (1 psi), the maximum pressure developed by the booster pump. Pressure gauges shall be installed at the raw milk inlet to the regenerator and the pasteurized or aseptic product outlet of the regenerator or the outlet of the cooler. The accuracy of these required pressure gauges shall be checked, by the regulatory agency, on installation; quarterly thereafter; and following repair or adjustment.

6. The motor, casing and impeller of the booster pump shall be identified, and such records maintained as directed by the regulatory agency. All electric wiring interconnections should be in permanent conduit (except that rubber covered cable may be used for final connections), with no electrical connections to defeat the purpose of any provisions of this *Ordinance*.

7. All raw milk in the regenerator will drain freely back into the constant-level raw milk tank when the raw milk pump(s) are shut down and the raw milk outlet from the regenerator is disconnected.

8. When vacuum equipment is located downstream from the flow-diversion device, means shall be provided to prevent the lowering of the pasteurized or aseptic product level in the regenerator during periods of diverted flow or shutdown. An effective vacuum breaker, plus an automatic means of preventing a negative pressure, shall be installed in the line between the vacuum chamber and the pasteurized or aseptic product inlet to the regenerator.

9. In the case of HHST pasteurization systems utilizing the temperatures of 89°C (191°F) and above and holding times of 1 second or less, with the flow-diversion device located downstream from the regenerator and/or cooler section, the requirement that the pasteurized product from the outlet of the regenerator or cooler shall rise to a vertical elevation of 30.5 centimeters (12 inches) above the highest raw product level downstream from the constant-level tank and shall be open to the atmosphere at this or a higher elevation, may be eliminated. *Provided*, that a differential pressure controller is used to monitor the highest pressure in the raw product side of the regenerator and the lowest pressure in the pasteurized side of the regenerator, and the controller is interlocked with the flow-diversion device and is set and sealed so that whenever improper pressures occur in the regenerator, forward flow of product is automatically prevented and will not start again until all product-contact surfaces between the holding tube and flow-diversion device have been held at or above the required pasteurization temperature, continuously and simultaneously for at least the required pasteurization time as defined in Definition V of this *Ordinance*.

In the case of aseptic processing systems used for producing aseptic milk and milk products, there shall be an accurate differential pressure recorder-controller installed on the regenerator. The scale divisions shall not exceed 13.8 kPa (2 pounds per square inch) on the working scale of not more than 138 kPa (20 pounds per square inch) per 25.4 millimeter (1 inch). The controller shall be tested for accuracy against a known accurate standard pressure indicator upon installation; at least once every 3 months of operation thereafter; or more frequently if necessary, to ensure its accuracy. One pressure sensor shall be installed at the aseptic product regenerator outlet and the other pressure sensor shall be installed at the raw product regenerator inlet.

10. When culinary steam is introduced directly into milk or milk products, as the means of terminal heating to achieve pasteurization or aseptic processing temperature, and vacuum equipment is located downstream from the holding tube, the requirement that a vacuum breaker be installed at the inlet to the pasteurized or aseptic side of the regenerator may be eliminated. *Provided*, that the differential pressure controller is installed and wired to control the flow-diversion device as described in paragraph 9 of this section.

11. When the differential pressure controller is installed and wired to control the flow-diversion device as described in paragraph 9 of this section, the raw product booster pump may be permitted to run at all times. *Provided*, that the metering pump is in operation.

Milk-to-Water-to Milk Regenerative Heating

Milk-to-water-to-milk regenerators shall comply with the following or equally satisfactory specifications:

Milk-to-water-to-milk regenerators shall be constructed, installed and operated such that the pasteurized or aseptic product in the regenerator will be under greater pressure than the heat-transfer-medium in the pasteurized or aseptic product side of the regenerator.

1. A differential pressure controller shall be used to monitor pressures of the pasteurized product and the heat-transfer medium.

2. In the case of aseptic processing systems, a differential pressure-recorder shall be used to monitor pressures of the aseptic product and the heat transfer medium.

3. In either case, one pressure sensor shall be installed at the pasteurized or aseptic product outlet of the regenerator and the other pressure sensor shall be installed at the heat-transfer-medium inlet of the pasteurized or aseptic product side of the regenerator. This controller or recorder-controller shall divert the flow-diversion device whenever the lowest pressure of pasteurized or aseptic product in the regenerator fails to exceed the highest pressure of heat-transfer-medium in the pasteurized or aseptic product side of the regenerator by at least 6.9 kPa (1 psi). Forward flow of product shall be automatically prevented until all product-contact surfaces between the holding tube and the flow-diversion device have been held at or above the required pasteurization or sterilization temperature continuously and simultaneously for at least the pasteurization or sterilization time.

4. The heat-transfer-medium pump shall be wired so that it cannot operate unless the metering pump is in operation.

NOTE: See Appendix H for further discussion concerning methods of achieving the required pressure relationships within the regenerator.

ITEM 16p(E). PASTEURIZATION AND ASEPTIC PROCESSING RECORDS, EQUIPMENT TESTS AND EXAMINATIONS

1. **PASTEURIZATION AND ASEPTIC PROCESSING RECORDS:** All temperature and flow rate pasteurization recording charts or alternative records acceptable to FDA in place of charts shall be preserved for a period of 3 months. *Provided*, that all records and recording charts for aseptic milk and milk product systems shall be retained for a period of 3 years. The use of such charts shall not exceed the time limit for which they are designed. Overlapping of recorded data shall be a violation of this item. The following information shall be entered on the charts or other records acceptable to FDA in place of charts as applicable:

a. **Batch Pasteurizers:**

(1) Date.

(2) Number or location of recorder when more than one is used.

(3) A continuous record of the product temperature.

(4) Extent of holding period, including filling and emptying times when required.

(5) Reading of airspace thermometer, at the start of the holding period and at the end of the holding period, at a given time or reference point as indicated on the chart.

(6) Reading of indicating thermometer, at the start of the holding period, at a given time or reference point as indicated on the chart.

(7) Quarterly, the initials of the regulatory agency opposite the required readings of the indicating thermometer and airspace thermometer.

(8) Quarterly, the time accuracy of the recorder, as determined by the regulatory agency.

(9) Amount and name of pasteurized milk or milk product represented by each batch or run on the chart.

(10) Record of unusual occurrences.

(11) Signature or initials of operator.

(12) Name of milk plant.

b. **High-Temperature, Short-Time Pasteurizers, Higher Heat, Shorter Time Pasteurizers:** Recording thermometer charts shall contain all the information specified in a. above, except 4, 5 and reference to the airspace thermometer in item 7, and in addition, shall include the following:

(1) A record of the time during which the flow-diversion device is in the forward-flow position.

(2) The cut-in and cut-out milk temperatures, recorded daily by the operator, at the beginning of the run (HTST only), and initialed quarterly by the regulatory agency.

(3) Number six from above shall also be recorded immediately after a chart has been changed.

NOTE: The recorded temperature shown on the controller chart shall be used to determine that the required temperature for milk products containing higher fat and/or sweeteners has been achieved.

c. **Continuous Flow Pasteurizers or Aseptic Processing Equipment with Meter Based Timing Systems:** Flow rate recording charts shall be capable of continuously recording flow at the flow alarm set point and at least 19 liters (5 gallons) per minute higher than the high flow alarm setting. Flow rate recording charts shall contain all the information specified in a. above, except 3, 4, 5, 6, and 7 and in addition shall include the following:

(1) A record of the time during which the flow-diversion device is in the forward-flow position.

(2) A continuous record of the flow rate.

d. **Aseptic Processing Systems:** Recording charts shall contain all the information specified in a. above, except 4, 5 and reference to the airspace thermometer in item 6 and 7. In addition these records shall include c. above if applicable and the following:

(1) A continuous record of the time during which the flow-diversion device, valve or system is in the forward-flow position.

(2) A continuous record of applicable regenerator pressures.

(3) Not later than 1 working day after the actual process, and before shipment or release for distribution, a representative of plant management, who is qualified by suitable training or experience, shall review all processing and production records for completeness and to ensure that the product received the schedule process. The records, including the recording thermometer chart(s), shall be signed or initialed and dated by the reviewer.

(4) Number six from above shall also be recorded immediately after a chart has been changed.

2. **EQUIPMENT TESTS AND EXAMINATIONS:** The regulatory agency shall perform the indicated tests on the following instruments and devices initially on installation; and at least once each 3 months and the remaining days of the month in which the equipment tests are due and whenever any alteration or replacement is made which may affect the proper operation of the instrument or device. *Provided*, that the holding time test shall be conducted at least every 6 months and the remaining days of the month in which the equipment check is due.

On an emergency basis, pasteurization equipment may be tested and temporarily sealed by a dairy plant employee provided the following conditions are met:

a. The individual applying the seal(s) is employed in a supervisory capacity by the plant in which the seal was removed;

b. The individual has satisfactorily completed a course of instruction, acceptable to the regulatory agency, on test controls for pasteurization equipment that includes a minimum of 8 hours classroom instruction;

c. The individual has demonstrated the ability to satisfactorily conduct all pasteurization control tests, in the presence of a regulatory official, within the past year;

d. The individual is in possession of authorization from the regulatory agency to perform these tests;

e. The individual will immediately notify the regulatory agency of the time of the shutdown that would necessitate the removal of the regulatory seals. Permission to test (and seal) the equipment must be obtained for each specific incident. The individual will also notify the regulatory agency of the identity of the controls affected, the cause (if known) of the equipment failure, the repairs made and the results of testing (when completed). The individual will provide the identity and volume of products processed during the period that temporary seals were applied to the regulatory agency;

f. If regulatory tests reveal that equipment or controls are not in compliance with the provisions of this document, all products that were processed during that period will be recalled;

g. The regulatory agency or a properly trained regulatory official (commissioned by the responsible state) of each participating non-U.S. country or political subdivision thereof will remove the

temporary seals, retest the equipment and apply regulatory seals within 3 working days of notification by industry; and

h. No Grade "A" dairy products will be processed after three working days without the affected equipment being tested and sealed by the regulatory agency or a properly trained regulatory official (commissioned by the responsible state) of each participating non-US country or political subdivision thereof.

Table 4. Equipment Tests--Batch, HTST, HHST and Aseptic Processing Systems		
1.	Vat, HTST, HHST, Aseptic indicating and airspace thermometers	Temperature accuracy
2.	Vat, HTST, HHST, Aseptic recording thermometer	Temperature accuracy
3.	Vat, HTST, HHST, Aseptic recording thermometer	Time accuracy
4.	Vat, HTST, HHST, Aseptic indicating and recording thermometer	Recording vs. Indicating thermometer
5.1	HTST, HHST FDD	Leakage pass FDD
5.2	HTST, HHST FDD	FDD freedom of movement
5.3	HTST, HHST FDD	Device assembly (single stem)
5.4	HTST, HHST FDD	Device assembly (dual stem)
5.5	HTST FDD	Manual diversion
5.6	HTST, HHST FDD	Response time
5.7	HTST, HHST FDD	Time delay (inspect)
5.8	HTST, HHST FDD	Time delay (CIP)
5.9	HTST FDD	Time delay (leak detect flush)
6.	Vat leak protector valve(s)	Leakage
7.	HTST indicating thermometers	Response time
8.	HTST recording thermometers	Response time
9.1	HTST pressure switches	Regenerator pressures
9.2.1	HTST, HHST, Aseptic differential pressure controllers	Calibration
9.2.2	HTST differential pressure controllers	Regenerator pressure
9.2.3	HHST and Aseptic differential pressure controllers	Regenerator pressure
9.3.1	HTST booster pump/FDD	Interwiring check
9.3.2	HTST booster pump/metering pump	Interwiring check
10.1	HTST FDD	Temperature cut-in/cut-out
10.2	HHST FDD, Aseptic divert system (indirect heat)	Temperature cut-in/cut-out
10.3	HHST FDD, Aseptic divert system (direct heat)	Temperature cut-in/cut-out
11.1	HTST holding tubes/timing pumps (except meter based)	Holding time
11.2.a	HTST holding tubes/magnetic flow meter based timing systems	Holding time
11.2.b	HTST, HHST, Aseptic magnetic flow meter based timing systems	Flow alarm
11.2.c	HTST, HHST, Aseptic magnetic flow meter based timing systems	Loss of signal/low flow
11.2.d	HTST magnetic flow meter based timing systems	Flow rate cut-in/cut-out
11.2.e	HTST magnetic flow meter based timing systems	Time delay
11.3	HHST holding tubes indirect heat	Holding time
11.4	HHST holding tubes direct injection heat	Holding time
11.5	HHST holding tubes direct infusion heat	Holding time
12.1	HHST, Aseptic systems indirect heating	Sequence logic
12.2	HHST, Aseptic systems direct heating	Sequence logic
13.	HHST, Aseptic systems	Pressure in the holding tube
14.	HHST, Aseptic systems using direct injection heating	Pressure differential across injector

ITEM 17p. COOLING OF MILK

All raw milk and milk products shall be maintained at 7°C (45°F) or less until processed. All pasteurized milk and milk products, except those to be cultured, shall be cooled immediately prior to filling or packaging, in approved equipment, to a temperature of 7°C (45°F) or less. All pasteurized milk and milk products shall be stored at a temperature of 7°C (45°F) or less. On delivery vehicles, the temperature of milk and milk products shall not exceed 7°C (45°F). Every room or tank in which milk or milk products are stored shall be equipped with an accurate thermometer. *Provided*, that aseptically processed milk and milk products to be packaged in hermetically sealed containers shall be exempt from the cooling requirements of this item.

PUBLIC-HEALTH REASON

When milk is not cooled within a reasonable time, after it is received at the pasteurization plant, its bacterial content will be materially increased. The same reasoning applies to cooling the milk and milk products after pasteurization.

ADMINISTRATIVE PROCEDURES

This item is deemed to be satisfied when:

1. All raw milk and milk products are maintained at 7°C (45°F) or less until processed.

2. All pasteurized milk and milk products, except those to be cultured, are cooled immediately in approved equipment prior to filling and packaging to a temperature of 7°C (45°)F or less. All pasteurized milk and milk products shall be stored at a temperature of 7°C (45°F) or less. On delivery vehicles, the temperature of milk and milk products shall not exceed (7°C) 45°F.

3. Each refrigerator room in which milk or milk products are stored, except aseptically processed milk and milk products, is equipped with an indicating thermometer which complies with the applicable specifications of Appendix H. Such thermometer shall be located in the warmest zone of the refrigerator room.

Each storage tank shall be equipped with an indicating thermometer, the sensor of which shall be located to permit the registering of the temperature of the contents when the tank contains no more than 20 percent of its calibrated capacity. Such thermometer shall comply with the applicable specifications of Appendix H.

4. All surface coolers comply with the following specifications:

a. The sections of open-surface coolers shall be so installed as to leave a gap of at least 6.4 millimeters (0.25 inch) between the header sections to permit easy cleaning.

b. Where header ends are not completely enclosed within the cooler covers, condensation or leakage from the headers shall be prevented from entering the milk or milk products by so shaping the exposed header faces, above and below all gaps, that condensation is directed away from the tubes, and by using deflectors at the bottom of the headers; or by shortening the bottom of the headers; or by shortening the bottom trough; or by some other approved method.

c. The location of supports of cooler sections shall prevent drip from entering the milk or milk products.

d. All open-surface coolers shall be provided with tight-fitting shields which protect the milk and milk products from contamination by flies, dust, drip, splash or manual contact.

5. Recirculated cold water which is used in coolers and exchangers, including those systems in which a freezing point depressant is used, is from a safe source and protected from contamination. Such water shall be tested semiannually and shall comply with the bacteriological standards of Appendix G. Samples shall be taken by the regulatory agency and examination shall be conducted in an official laboratory. Recirculated water systems, which become contaminated through repair work or otherwise, shall be properly treated and tested before being returned to use. Freezing point depressants, when used in recirculating systems, shall be nontoxic.

ITEM 18p. BOTTLING AND PACKAGING

Bottling and packaging of milk and milk products shall be done at the place of pasteurization in a sanitary manner by approved mechanical equipment.[16]

[16] Communities and/or States desiring to regulate the sale of cottage cheese, dry curd cottage cheese and reduced fat or lowfat cottage cheese under the terms of this *Ordinance* should add the following:

"*Provided*, that cottage cheese, dry curd cottage cheese and reduced fat or lowfat cottage cheese may be transported in sealed containers in a protected, sanitary manner from one plant to another for creaming and/or packaging."

"If suitable equipment is not available for packaging dry curd cottage cheese, other methods of packaging which eliminate possible chances of contamination may be approved by the regulatory agency."

PUBLIC-HEALTH REASON

Manual bottling and packaging is very apt to result in the exposure of the milk and milk products to contamination, which would nullify the effect of pasteurization. The transfer of milk from the place of pasteurization to another plant for bottling subjects the pasteurized product to unnecessary risks of contamination.

ADMINISTRATIVE PROCEDURES[17]

This item is deemed to be satisfied when:

1. All milk and milk products, including concentrated milk and milk products, are bottled and packaged at the plant where final pasteurization is performed. Such bottling and packaging shall be done without undue delay following final pasteurization.

2. All bottling or packaging is done on approved mechanical equipment. The term "approved mechanical equipment" shall not be interpreted to exclude manually operated machinery, but is interpreted to exclude methods in which the bottling and capping devices are not integral in one system.

3. All pipes, connections, defoaming devices and similar

[17] Communities and/or States desiring to regulate the sale of cottage cheese, dry curd cottage cheese and reduced fat or lowfat cottage cheese under the terms of this *Ordinance* should add the following to the Administrative Procedures of Item 18p:

"If cottage cheese, and dry curd cottage cheese are protected in a sanitary manner; they may be transported in sealed containers from one plant to another for creaming and/or packaging."

appurtenances shall comply with items 10p and 11p of this section. Milk and milk products from continuous defoamers are not returned directly to the filler bowl.

4. Bottling or packaging machine supply tanks and bowls have covers which are constructed to prevent any contamination from reaching the inside of the filler tank or bowl. All covers shall be in place during operation.

5. A drip deflector is installed on each filler valve. Such drip deflector shall be designed and adjusted to divert condensation away from the open container.

6. Container in-feed conveyors to automatic bottling or packaging machines have overhead shields to protect the bottles or packages from contamination. Such shields shall extend from the bottle washer discharge to the bottle feed star, or in the case of single-service packaging machines, from the forming unit discharge to the filling unit and from the filling unit to the closure unit. Overhead shields shall be required on can in-feed conveyors when the cans are fed to the filler with the covers off.

7. Container coding/dating devices are designed, installed and operated such that the coding/dating operations are performed in such a manner that open containers are not subjected to contamination. Shielding shall be properly designed and installed to preclude contamination of open containers.

8. Container fabricating materials, such as paper stock, foil, wax, plastic, etc., are handled in a sanitary manner and protected against undue exposure during the package assembly operation.

9. Bottling and packaging machine floats are designed to be adjustable without removing the cover.

10. The filler pipe of all bottling and packaging machines have an apron or other approved device, as close to the filler bowl as possible, to prevent condensation or drippage from reaching the inside of the filler bowl.

11. Filling cylinders on packaging machines are protected from contamination by the use of overhead shields. When any lubricant is applied to the filler pistons, cylinders or other milk-contact surfaces, the lubricant shall be food-grade and applied in a sanitary manner.

12. In the case of aseptic processing systems used for producing aseptic milk and milk products, the aseptic product shall be aseptically filled into sterilized containers and hermetically sealed in conformance with the applicable requirements of 21 CFR 113.

ITEM 19p. CAPPING

Capping or closing of milk and milk product containers shall be done in a sanitary manner by approved mechanical capping and/or closing equipment. The cap or closure shall be designed and applied in such a manner that the pouring lip is protected to at least its largest diameter and, with regard to fluid product containers, removal cannot be made without detection.

PUBLIC-HEALTH REASON

Hand-capping exposes the milk to contamination. A cover extending over the pouring lip of the container protects it from contamination during subsequent handling, and prevents the sucking back into the bottle, by temperature contraction, of any contaminated liquid on the cap, including milk which has been forced out by temperature expansion and which may have become contaminated. Caps or closures that are applied in such a manner that they cannot be removed without detection help to assure the consumer that the milk and milk products have not been contaminated after packaging.

ADMINISTRATIVE PROCEDURES[18]

This item is deemed to be satisfied when:

1. The capping or closing of milk and milk product containers is done in a sanitary manner on approved mechanical capping/closing equipment. The term "approved mechanical capping and/or closing equipment" shall not exclude manually operated machinery. Hand-capping shall be prohibited. *Provided*, that if suitable mechanical equipment, for the capping or closing of specific container(s) of 12.8 liters (3 gallons) or more is not available, other methods which eliminate all possibility of contamination may be approved by the regulatory agency.

2. Bottles and packages which have been imperfectly capped or closed are emptied immediately into approved sanitary containers. Such milk or milk products shall be protected from contamination, maintained at 7°C (45°F) or less and subsequently repasteurized or discarded.

3. All caps and closures are designed and applied in such a manner that the pouring lip is protected to at least its largest diameter and, with respect to fluid product containers, removal cannot be made without detection. Single-service containers are so constructed that the product and the pouring and opening areas are protected from contamination during handling, storage and when the containers are initially opened.

4. All caps and closures are handled in a sanitary manner. The first cap from each tube, the first lap(s) from each roll of cap or cover stock and the first sheet of parchment or cover paper shall be discarded. The subsequent use of loose caps which are left in the cappers at the end of an operating period, after removal from the cap tubes, shall be a violation of this item, *provided*, that loose plastic caps and closures supplied by the manufacturer in plastic bags may be returned to storage in a protective wrap if removed from a hopper/descrambler immediately after a production run. Plastic caps and closures remaining in the chute between the hopper and the capping device shall be discarded.

---

[18] Communities and/or States desiring to regulate the sale of cottage cheese, dry curd cottage cheese, and reduced fat or lowfat cottage cheese under the terms of this *Ordinance* should add the following to the indicated Administrative Procedures of Item 19p:

1. "*Provided further*, that if suitable equipment is not available for capping cottage cheese, dry curd cottage cheese and reduced fat or lowfat cottage cheese, other methods of capping which eliminate possible chances of contamination may be approved by the regulatory agency.

4. Closures for cottage cheese, dry curd cottage cheese and reduced fat or lowfat cottage cheese containers shall extend over the top edges of the container so as to protect the product from contamination during subsequent handling.

5. Provided, that this requirement shall not apply to cottage cheese, dry curd cottage cheese, and reduced fat or lowfat cottage cheese container closures, when such closures are supplied in a totally enclosed package, or wrapped so as to protect the closures."

ITEM 20p. PERSONNEL--CLEANLINESS

Hands shall be thoroughly washed before commencing plant functions and as often as may be required to remove soil and contamination. No employee shall resume work after visiting the toilet room without thoroughly washing his hands. All persons, while engaged in the processing, pasteurization, handling, storage or transportation of milk, milk products, containers, equipment and utensils shall wear clean outer garments. All persons, while engaged in the processing of milk or milk products shall wear adequate hair coverings and shall not use tobacco.

PUBLIC-HEALTH REASON

Clean clothing and clean hands (including clean fingernails) reduce the possibility of milk, milk products, containers and equipment becoming contaminated.

ADMINISTRATIVE PROCEDURES

This item is deemed to be satisfied when:

1. Hands are thoroughly washed before commencing plant functions and as often as may be required to remove soil and contamination.
2. Each employee washes his hands following a visit to the toilet room and prior to resuming work.
3. All persons while engaged in the processing, pasteurization, handling, storage or transportation of milk, milk products, containers, equipment and utensils wear clean outer garments.
4. The use of tobacco products is prohibited in all rooms in which milk or milk products are processed, handled or stored, or in which milk containers, equipment and utensils are washed. These rooms shall include, but are not limited, to the receiving, processing, packaging, product storage (cooling and dry storage ingredients), single-service article storage and container/utensil wash up areas. Adequate head coverings are worn by any person engaged in the processing of milk or milk products.

ITEM 21p. VEHICLES

All vehicles used for the transportation of pasteurized milk and milk products shall be constructed and operated so that the milk and milk products are maintained at $7^{o}C$ ($45^{o}F$) or less and are protected from contamination.

PUBLIC-HEALTH REASON

Milk and milk products, as well as empty containers, should be protected against contamination at all times.

ADMINISTRATIVE PROCEDURES

This item is deemed to be satisfied when:

1. All vehicles are kept clean.
2. Material which is capable of contaminating milk or milk products is not transported with milk or milk products.
3. Vehicles have fully enclosed bodies with well-fitted, solid doors.

ITEM 22p. SURROUNDINGS

Milk plant surroundings shall be kept neat, clean and free from conditions which might attract or harbor flies, other insects and rodents or which otherwise constitute a nuisance.

PUBLIC-HEALTH REASON

The surroundings of a dairy plant should be kept neat and clean to prevent attracting rodents, flies and other insects, which may contaminate the milk or milk products. Insecticides and rodenticides, not approved for use in dairy plants, or approved insecticides and rodenticides, not used in accordance with label recommendations, may contaminate the milk or milk product processed by the dairy plant.

ADMINISTRATIVE PROCEDURES

This item is deemed to be satisfied when:

1. There is no accumulation of trash, garbage or similar waste in areas adjacent to the milk plant. Waste material stored in suitable covered containers shall be considered in compliance.
2. Driveways, lanes and areas serving milk plant vehicular traffic are graded, drained and free from pools of standing water.
3. Outdoor areas for milk tank truck unloading are constructed of smooth concrete or equally impervious material, properly sloped to drain and equipped with trapped drains of sufficient size.
4. Only insecticides and rodenticides approved for use by the regulatory agency and/or registered with the U.S. Environmental Protection Agency shall be used for insect and rodent control.

NOTE: A convenient inspection form for milk plants, receiving stations and transfer stations, which summarizes the applicable sanitation requirements is found in Appendix M.

SECTION 8. ANIMAL HEALTH

(A) All milk for pasteurization shall be from herds which are located in a Modified Accredited Tuberculosis Area as determined by the U.S. Department of Agriculture. *Provided*, that herds located in an area that fails to maintain such accredited status shall have been accredited by said Department as tuberculosis free or shall have passed an annual tuberculosis test.

(B) All milk for pasteurization shall be from herds under a brucellosis eradication program which meets one of the following conditions:

1. Located in a Certified Brucellosis-Free Area as defined by the U.S. Department of Agriculture and enrolled in the testing program for such areas; or
2. Meet U.S. Department of Agriculture requirements for an individually certified herd; or
3. Participating in a milk ring testing program at least two times per year at approximately 180 day intervals and all herds with positive milk ring results shall have the entire herd blood tested within 30 days from the date of the laboratory ring tests; or
4. Have an individual blood agglutination test annually with an allowable maximum grace period not exceeding 2 months.

(C) Goat milk and sheep[19] milk for pasteurization or ultra-pasteurization or aseptic processing shall be from a herd or flock which has passed an annual whole herd or flock tuberculosis and brucellosis test as recommended by the State veterinarian or regional USDA veterinarian

[19] The implementation of the requirement for testing goat and sheep milk for Brucellosis was delayed until after the 2001 NCIMS Conference.

in charge (VIC) or from a herd or flock which has passed an initial whole herd Burcellosis test, followed only by testing replacement animals or any animals entering the milking group or sold as dairy animals.

(D) For diseases other than brucellosis and tuberculosis, the regulatory agency shall require such physical, chemical or bacteriological tests as it deems necessary. The diagnosis of other diseases in dairy animals shall be based upon the findings of a licensed and accredited[20] veterinarian or an accredited veterinarian in the employ of an official agency. Any diseased animal disclosed by such test(s) shall be disposed of as the regulatory agency directs.

(E) Records supporting the tests required in this section shall be available to the regulatory agency and be validated with the signature of a licensed and accredited veterinarian or an accredited veterinarian in the employ of an official agency.

PUBLIC-HEALTH REASON

The health of the animal is a very important consideration, because a number of diseases of cattle, including tuberculosis, brucellosis, Q-fever, salmonellosis, staphylococcal infection and streptococci infection, may be transmitted to man through the medium of milk. The organisms of most of these diseases may get into the milk either directly from the udder, or indirectly through infected body discharges which may drop, splash or be blown into the milk.

The great reduction in the incidence of bovine tuberculosis in man indicates that the practice of good sanitation in animal husbandry, the testing of dairy animals and removal of the reactors from the herds and the pasteurization of milk, have been effective in the control of this disease. The reservoir of bovine tuberculosis still exists; however, constant vigilance against this disease must be continued by industry and health agencies.

ADMINISTRATIVE PROCEDURES

BOVINE TUBERCULOSIS: All tuberculin tests and retests shall be made, and any reactors disposed of, in accordance with the *Uniform Methods and Rules; Bovine Tuberculosis Eradication, Uniform Methods and Rules for Establishment and Maintenance of Tuberculosis-Free Accredited Herds of Cattle, Modified Accredited Areas and Areas Accredited Free of Bovine Tuberculosis in the Domestic Bovine*, as approved by the U. S. Department of Agriculture at the time of the adoption of this *Ordinance*. For tuberculosis test purposes, the herd is defined as all adult cattle 24 months of age and over, including any commingled beef animals. Dairy cattle less than 2 years of age and already milking, shall be included in the herd test. A letter or other official correspondence attesting to the accreditation status of the locality in which the herd is located, including the date of accreditation, or a certificate identifying the animals tested, the date of injection, the date of reading of the test and the results of the test signed by a U.S. Department of Agriculture accredited veterinarian, shall be evidence of compliance with the above requirements and shall be filed with the regulatory agency (See Appendix A).

BOVINE BRUCELLOSIS: All brucellosis tests, retests, disposal of reactors, vaccination of calves and certification of herds and areas shall be in accordance with *Brucellosis Eradication "Recommended Uniform Methods and Rules,"* as approved by the U.S. Department of Agriculture. All

[20] The term “accredited” in this section means accredited by the USDA APHIS Veterinary Services.

reactors disclosed on blood agglutination tests shall be separated immediately from the milking herd and the milk of these reactors shall not be used for human consumption.

A certificate identifying each animal, signed by the veterinarian and the director of the laboratory making the test, shall be filed as directed by the regulatory agency. *Provided*, that in the event the herd is subject to the milk ring test, the record shall be required to show only the date and results of such test. Within 30 days following the expiration of an official milk ring testing program, or in the case of a herd subject to annual blood tests, 13 months following the last annual blood tests, the regulatory agency shall notify the herd owner or operator of the necessity to comply with the brucellosis requirements. The failure of the herd owner or operator to comply with the brucellosis requirements within 30 days of written notice shall result in immediate suspension of the permit (See Appendix A).

SECTION 9. MILK AND MILK PRODUCTS WHICH MAY BE SOLD

From and after 12 months from the date on which this *Ordinance* is adopted, only Grade "A" pasteurized, ultra-pasteurized or aseptically processed milk and milk products[21] shall be sold to the final consumer, to restaurants, soda fountains, grocery stores or similar establishments. *Provided*, that in an emergency, the sale of pasteurized milk and milk products which have not been graded, or the grade of which is unknown, may be authorized by the regulatory agency, in which case, such milk and milk products shall be labeled "ungraded".

NOTE: Certified pasteurized milk is derived from certified raw milk which meets the latest requirements of the American Association of Medical Milk Commissions, Inc, 1824 North Hillhurst Avenue, Los Angeles, CA 90027.

SECTION 10. TRANSFERRING; DELIVERY CONTAINERS; COOLING

Except as permitted in this section, no milk producer, bulk milk hauler/sampler or distributor shall transfer milk or milk products from one container or milk tank truck to another on the street, in any vehicle, store or in any place except a milk plant, receiving station, transfer station or milkhouse especially used for that purpose. The dipping or ladling of milk or fluid milk products is prohibited.

It shall be unlawful to sell or offer for sale any pasteurized milk or milk product which has not been maintained at the temperature set forth in Section 7 of this *Ordinance*. If containers of pasteurized milk or milk products are stored in ice, the storage container shall be properly drained.

ADMINISTRATIVE PROCEDURES

TRANSFERRING: The dipping or ladling of milk and fluid milk products is expressly prohibited, except for immediate cooking purposes. Milk and milk product containers which have been filled and sealed at a milk plant shall be used for the delivery of milk or milk products. Caps, closures or labels shall not be removed or replaced during transportation.

BULK DISPENSERS: Bulk dispensers, approved by the regulatory agency,

[21] Communities and/or States wishing to provide for the sale of certified pasteurized milk should include such product in this section.

shall satisfy the following sanitary design, construction and operation requirements:

1. All dispensers shall comply with the applicable requirements of Section 7 of this *Ordinance*.

2. Product-contact surfaces shall be inaccessible to manual contact, droplet infection, dust or flies, but the delivery orifice may be exempted from this requirement.

3. All parts of the dispensing device with which milk or milk products come into contact, including any measuring device, shall be thoroughly cleaned and sanitized at the milk plant. *Provided*, that dispensing valves which are applied to the dispenser subsequent to its delivery to the retail vendor may be cleaned and sanitized at such establishments.

4. The dispensing container shall be filled at the milk plant and shall be so sealed that it is impossible to withdraw any part of its contents, or to introduce any substance without breaking the seal(s).

5. The milk or milk products shall be thoroughly and automatically mixed with each dispensing operation, except for milk or milk products which remain homogeneous.

6. All cans shall be thoroughly cleaned and sanitized. Milk and milk products shall be kept at or below 7°C (45°F) at all times. The dispenser tube shall be integral with the dispensing container, shall be protected and shall be under adequate refrigeration during transportation and storage.

SECTION 11. MILK AND MILK PRODUCTS FROM POINTS BEYOND THE LIMITS OF ROUTINE INSPECTION

Milk and milk products from points beyond the limits of routine inspection of the ... of ..., or its jurisdiction, shall be sold in ...,[22] or its jurisdiction, provided they are produced and pasteurized, ultra-pasteurized or aseptically processed under regulations which are substantially equivalent to this *Ordinance* and have been awarded an acceptable milk sanitation compliance and enforcement rating made, by a State Milk Sanitation Rating Officer certified by the Food and Drug Administration.

ADMINISTRATIVE PROCEDURE

The regulatory agency should accept, without their actual physical inspection, supplies of milk and milk products from an area or an individual shipper not under their routine inspection. *Provided*, that:

1. Milk and milk products upon arrival shall comply with bacteriological, chemical and temperature standards of Section 7. *Provided*, that direct shipped producer milk that is under the supervision of more than one regulatory agency may be exempt from the bacteriological requirement for commingled samples. However, the receiving regulatory agency shall have the right to use the individual producer samples to determine compliance with the bacteriological standards;

2. After receipt, pasteurized and ultra-pasteurized milk and milk products shall comply with Sections 2, 4 and 10;

[22] Substitute proper jurisdiction here and in all similar places throughout the *Ordinance.*

NOTE: Raw and pasteurized milk and milk products beyond the limits of routine inspection shall be sampled as the regulatory agency requires.

3. The milk or milk products are produced and processed under regulations substantially equivalent to those of this *Ordinance*;

4. The supplies are under routine official supervision;

5. The supplies have been awarded, by the State Milk Sanitation Rating Officer certified by the Food and Drug Administration, a milk sanitation compliance and enforcement rating equal to that of the local supply or equal to 90 percent or higher; and

6. All ratings are made on the basis of procedures outlined in the *Methods of Making Sanitation Ratings of Milk Supplies.*

NOTE: Names of interstate milk shippers and their ratings, as reported by State milk rating agencies, are contained in *Sanitation Compliance and Enforcement Ratings of Interstate Milk Shippers*, issued semi-annually by the Food and Drug Administration for the information of interested persons. Copies of this list may be obtained from the State milk rating agency or from the Food and Drug Administration (HFS-626), 200 C Street, S.W., Washington, DC 20204.

7. The supplies have been awarded, a satisfactory listing, by the State Listing Officer standardized by the Food and Drug Administration, under the NCIMS HACCP Pilot Program. This provision will expire on December 31, 2001 unless extended by future Conference action.

SECTION 12. PLANS FOR CONSTRUCTION AND RE-CONSTRUCTION

Properly prepared plans for all milkhouses, milking barns, stables and parlors, milk plants, receiving stations and transfer stations regulated under this *Ordinance* which are hereafter constructed, reconstructed or extensively altered shall be submitted to the regulatory agency for written approval before work is begun.

SECTION 13. PERSONNEL HEALTH

No persons affected with any disease capable of being transmitted to others through the contamination of food shall work at a milk plant in any capacity which brings them into direct contact with finished products, such as pasteurized or aseptically processed milk or milk products, or which brings them into direct contact with associated pasteurized or aseptically processed milk product-contact surfaces.

ADMINISTRATIVE PROCEDURES

Milk plant operators who have received reports, under this section, from employees who have handled pasteurized milk, pasteurized milk products or associated product-contact surfaces shall immediately report these facts to the appropriate milk regulatory agency.

Dairy plant employees, or applicants to whom a conditional offer of employment has been made, shall be instructed by the dairy plant that the employee or applicant or applicants to whom a conditional offer of employment has been made is responsible to report to the dairy plant management, in a manner that allows the dairy plant to prevent the likelihood of disease transmission of diseases that are transmissible through

foods, if the employee or applicant to whom a conditional offer of employment has been made:

1. Is diagnosed with an illness due to Hepatitis A virus, Salmonella typhi, Shigella species, Norwalk and Norwalk-like Viruses, Staphylococcus aureus, Streptococcus pyogenes, Escherichia coli 0157:H7, enterohemorrhagic Escherichia coli, enterotoxigenic Escherichia coli, Campylobacter jejuni, Entamoeba histolytica, Giardia lamblia, Non-typhoidal Salmonella, Rotovirus, Taenia solium, Yersinia enterocolitica, Vibrio cholerae O1 or other infectious or communicable disease that has been declared by the Secretary of Health and Human Services to be transmissible to others through the handling of food, or has been clearly shown to be so based upon verifiable epidemiological data; or

2. Is exposed to, or suspected of causing, a confirmed foodborne disease outbreak of one of the diseases specified in number (1) above, including an outbreak at an event such as a family meal, church supper or ethnic festival because the employee or applicant to whom a conditional offer of employment has been made:

a. Prepared food implicated in the outbreak, or

b. Consumed food implicated in the outbreak, or

c. Consumed food at the event prepared by a person who is infected or ill.

3. Lives in the same household as a person who attends or works in a day care center or school, similar institution experiencing a confirmed outbreak of one of the diseases specified in number (1) above.

Similarly, dairy plant employees shall be instructed by the dairy plant management to report to the dairy plant management if the employee, or applicant to whom a conditional offer of employment has been made.

4. Has a symptom associated with acute gastrointestinal illness such as: abdominal cramps or discomfort, diarrhea, fever, loss of appetite for three or more days, vomiting, jaundice, or

5. Has a pustular lesion such as a boil or infected wound that is:

a. On the hands, wrists or exposed portions of the arms, unless the lesion is covered by a durable, moisture proof, tight-fitting barrier, or

b. On other parts of the body if the lesion is open or draining, unless the lesion is covered by a durable, moisture proof, tight-fitting barrier.

SECTION 14. PROCEDURE WHEN INFECTION OR HIGH RISK OF INFECTION IS DISCOVERED

When a person who may have handled pasteurized or aseptically processed milk or milk products or pasteurized or aseptically processed milk product-contact surfaces meets one or more of the conditions specified in the administrative procedures of Section 13, the regulatory agency is authorized to require any or all of the following measures.

The immediate restricting of that person from duties which require handling finished product, such as pasteurized milk or milk products, or the handling of related product-contact surfaces. This restriction may be lifted after an appropriate medical clearance or cessation of symptoms or both, according to the following criteria:

Table 5. Removal of Restrictions When Infection or High Risk of Infection is Discovered	
Health Status	**Removing Restrictions**
a. Is diagnosed with an illness due to Hepatitis A virus, Salmonella typhi, Shigella species, Norwalk and Norwalk-like Viruses, Staphylococcus aureus, Streptococcus pyogenes, Escherichia coli 0157:H7, enterohemorrhagic Escherichia coli, enterotoxigenic Escherichia coli, Campylobactor jejuni, Entamoeba histolytica, Giardia lamblia, Non-typhoidal Salmonella, Rotovirus, Taenia solium, Yersinia enterocolitica, Vibrio cholerae O1 or other infectious or communicable disease that has been declared by the Secretary of Health and Human Services to be transmissible to others through the handling of food or has been clearly shown to be so based upon verifiable epidemiological data.	Restrictions lifted by medical clearance.
b. Meeting a high risk scenario as specified in Section 13 (2 or 3) and/or experiencing symptoms in Section 13 (4 or, 5).	Restrictions lifted when symptoms cease or medical documentation is provided that infection does not exist.
c. Asymptomatic, but stools positive for Salmonella typhi, Shigella or Escherichia coli 0157:H7.	Restrictions lifted by medical clearance.
d. Past illness from Salmonella typhi, Shigella, Escherichia coli 0157:H7 or other human pathogens for which humans have been determined to be carriers.	Restrictions lifted by medical clearance.
e. In the case of diagnosed or suspected Hepatitis A, onset of jaundice within the last seven (7) days.	Restrictions lifted by medical clearance.
f. In the case of diagnosed or suspected Hepatitis A, onset of jaundice occurred more than seven (7) days ago.	Restrictions lifted by medical clearance or jaundice ceases.

1. The immediate exclusion of the affected dairy products from distribution and use when medically appropriate (i.e., a medical evaluation of the sequence of events indicates that contamination of product may have occurred).

2. The immediate requesting of medical and bacteriological examination of the person at risk. (**NOTE**: Persons at risk who decline to be examined may be reassigned to duties where they will not be required to handle finished products, such as pasteurized or aseptically processed milk or pasteurized or aseptically processed milk products and associated product-contact surfaces).

SECTION 15. ENFORCEMENT

This Ordinance shall be enforced by the regulatory agency in accordance with the *Grade "A" Pasteurized Milk Ordinance with Administrative Procedures-1978 Recommendations of the United States Public Health Service/Food and Drug Administration*, 1999 Revision. A certified copy[23] of which shall be on file at the ... clerk's office. Where the mandatory compliance with provisions of the appendixes is specified, such provisions shall be deemed a requirement of the *Ordinance*.

SECTION 16. PENALTY

Any person who shall violate any of the provisions of this *Ordinance* shall be guilty of a misdemeanor and upon conviction thereof shall be punished by a fine of not more than $ ... and/or such persons may be enjoined from continuing such violation(s). Each day upon which such a violation(s) occurs shall constitute a separate violation.

SECTION 17. REPEAL AND DATE OF EFFECT

All ordinances and parts of ordinances in conflict with this *Ordinance* shall be repealed 12 months after the adoption of this *Ordinance*, at which time this *Ordinance* shall be in full force and effect, as provided by law.

SECTION 18. SEPARABILITY CLAUSE

Should any section, paragraph, sentence, clause or phrase of this *Ordinance* be declared unconstitutional or invalid for any reason, the remainder of this *Ordinance* shall not be affected thereby.

[23] A certified copy may be secured from the Food and Drug Adminsitration, HFS-626, 200 "C" Street, S.W., Washington DC 20204.

APPENDIX A. ANIMAL DISEASE CONTROL

Copies of the *Uniform Methods and Rules; Bovine Tuberculosis Eradication, Uniform Methods and Rules for Establishment and Maintenance of Tuberculosis-Free Accredited Herds of Cattle, Modified Accredited Areas and Areas Accredited Free of Bovine Tuberculosis in the Domestic Bovine* and recommended *Uniform Methods and Rules; Brucellosis Eradication* current at the time of adoption of this *Grade "A" Pasteurized Milk Ordinance* may be obtained from:

Veterinary Services
Animal and Plant Health Inspection Service
U. S. Department of Agriculture,
Federal Center Building,
Hyattville, MD 20782

or

Federal Veterinarian in Charge
VS, APHIS, USDA
Your State Capitol

or

State Official in Charge of Animal Disease Control,
Your State Capitol

It is recommended that regulatory agencies initiate and/or promote a mastitis control program. A well-planned and extended educational phase will encourage the support of producers and reduce the problems of enforcement.

The National Mastitis Council, Inc., 2820 Walton Commons West, Suite 131, Madison WI 53704, has studied a large number of existing control programs and has outlined a suggested flexible control program. In addition, review of the current knowledge of mastitis may be found in their publication *Current Concepts of Bovine Mastitis* and the *Laboratory Handbook Of Bovine Mastitis.*

Sanitarians may find the screening test a useful device for detecting abnormal milk. Sample screening methods, as well as somatic cell diagnosis and reduction programs are discussed in the references above as well as the Dairy Practices Council (51 East Front Street, Suite 2, Keyport NJ 07735) publication "*The Field Person's Guide to Troubleshooting High Somatic Cell Counts*".

Regulatory action should not be based on the use of mastitis screening tests alone. Screening tests should be used as an adjunct to a complete program of mastitis control and milking-time inspections.

APPENDIX B. MILK SAMPLING, HAULING, AND TRANSPORTATION

Milk hauling, sampling and transport are integral parts of a modern dairy industry. Hauling, sampling and transport can be categorized into three separate functions. Dairy Plant Samplers, Bulk Milk Hauling, and Sampling and Milk Transport from one milk handing facility to another.

I. MILK SAMPLING AND HAULING PROCEDURES

The dairy plant sampler is an individual responsible for the collection of official samples for regulatory purposes outlined in Section 6 of the *Grade "A" Pasteurized Milk Ordinance.* These persons are employees of the regulatory agency or an official designee of the regulatory agency and are evaluated at least every two year period by the State Sampling Surveillance Officer. These individuals are evaluated using FDA form 2399--MILK SAMPLE COLLECTOR EVALUATION FORM, which is derived from *Standard Methods for the Examination of Dairy Products, (most current edition, issued by the American Public Health Association).* A copy of this form is included in this appendix.

The bulk milk hauler/sampler is any person who collects official samples and may transports raw milk from a farm and/or raw milk products to or from a milk plant, receiving station or transfer station and has in their possession a permit from any state to sample such products. The bulk milk hauler/sampler occupies a unique position making this individual a critical factor in the current structure of milk marketing. As a weigher and sampler, they stand as the official, and frequently the only judge of milk volumes bought and sold. As a milk receiver, the operating habits directly affect the quality and safety of milk committed to their care. When the obligations include the collection and delivery of samples for laboratory analysis, the hauler/sampler becomes a vital part of the quality control and regulatory programs affecting producer dairies. Section 3 of the *Grade "A" Pasteurized Milk Ordinance* requires that regulatory agencies establish criteria for issuing permits to bulk milk hauler/samplers. These individuals are evaluated at least once each two years using FDA form 2399a--MILK TANK TRUCK, HAULER REPORT AND SAMPLER EVALUATION FORM which is also included in this appendix.

The milk tank truck driver is any person who transports raw or pasteurized milk products to or from a milk plant, receiving station or transfer station. Any transportation of a direct farm pickup requires the milk tank truck driver to have responsibility for accompanying official samples.

The criteria for permitting these individuals should embrace at least the following;

TRAINING: To understand the importance of bulk milk collection and the techniques of sampling, all bulk milk hauler/samplers must be told why, and instructed how, in the proper procedures of picking up milk and the collection of samples. This training is industry's responsibility and can be accomplished under the supervision of the dairy fieldman, route supervisors or any appropriate person whose techniques and practices are known to meet requirements.

Training also frequently takes the form of classroom sessions in which the trainer describes pickup practices, demonstrates sampling and care of samples and affords the candidate the opportunity for

guided practice in these techniques. Basic considerations of sanitation and personal cleanliness, which are important to the protection of milk quality, are discussed here. Officials administering weights and measures frequently participate in these programs and provide instruction in the measuring of milk and the keeping of required records. An examination is usually administered at the conclusion of this program. Candidates failing the test are denied permits until indicated deficiencies are corrected.

Regularly scheduled refresher short courses by the regulatory agents and officials administering weights and measures, would assist in maintaining and increasing the efficiency of the hauler/sampler.

QUALIFICATIONS:

1. Experience. Experience may include a required period of observation in which the candidate accompanies a bulk milk hauler/sampler in the performance of their duties.
2. Personal References. Permit applications should be supported by suitable references testifying to the character and integrity of the candidate.

EVALUATION OF HAULER/SAMPLER AND PROCEDURES: The routine inspection of hauling/sampling procedures provides the regulatory agency with an opportunity to check both the condition of the hauler/sampler's equipment and the degree of conformance with required practices.

The hauler/sampler's technique is best determined when the regulatory agent is able to observe the hauler/sampler at one or more farms. Each bulk milk hauler/ sampler must be inspected by the regulatory agency prior to the issuance of a permit and at least once every 24 months thereafter as referenced in Section 5 of the PMO. The bulk milk hauler/sampler must hold a valid permit prior to collection of official samples.

The procedures for sampling and the care of samples, should be in compliance with *Standard Methods for the Examination of Dairy Products* of the American Public Health Association.

Specific items to be evaluated in determining compliance include:

1. Personal Appearance. Hauler/samplers shall practice good hygiene, shall maintain a neat and clean appearance and not use tobacco in the milk room.

2. Equipment Requirements.
   a.) Sample rack and compartment to hold all samples collected.
   b.) Refrigerant to hold temperature of milk samples between 0 - 4.4°C (32 - 40°F).
   c.) Sample dipper or other sampling devices of sanitary design approved by the regulatory agency, clean and in good repair.
   d.) Sterile sample bags, tubes or bottles, properly stored.
   e.) Calibrated pocket thermometer certified for accuracy every 6 months, accuracy + or - 1°C (2°F).
   f.) Approved sanitizing agent and sample dipper container.
   g.) Watch for timing milk agitation.
   h.) Applicable sanitizer test kit.

3. Milk Quality Checks.
   a.) Examine the milk by sight and smell for any off odor or any other abnormalities which would class the milk as not being acceptable (reject if necessary).
   b.) Wash hands thoroughly and dry with a clean single-service towel or acceptable air dryer immediately prior to measuring and/or sampling the milk.
   c.) Record milk temperature, time, date of pick up and hauler/sampler identification on the farm weight ticket; monthly the hauler/sampler shall check the accuracy of the thermometer on each bulk tank and record results. Pocket thermometer must be sanitized before use.

4. Milk Measurements.
   a.) The measurement of the milk shall be taken before agitation. If the agitator is running upon arrival at the milk room, the measurement can be taken only after the surface of the milk has been quiescent.
   b.) Carefully insert the measuring rod, after it has been wiped dry with a single-service towel, into the tank. Repeat this procedure until two identical measurements are taken. Record measurements on weight ticket.
   c.) Do not contaminate the milk during measurement.

4. Universal Sampling System.

It is required that if hauler/samplers collect raw milk samples, the "universal sampling system" be employed, whereby milk samples are collected every time the milk is picked up at the farm. This system permits the enforcement agency, at its discretion, at any given time and without notification to the industry, to analyze samples collected by the hauler/sampler. The use of the "universal sample" puts more validity and faith in samples collected by industry personnel.

   a.) Pick up and handling practices are conducted to prevent contamination of milk contact surfaces.
   b.) The milk must be agitated a sufficient time to obtain a homogeneous blend. Follow State and/or manufacturer's guidelines.
   c.) While the tank is being agitated, bring the sample container, dipper, dipper container and sanitizing agent (for outlet valve), or single-service sampling tubes into the milk room aseptically. Remove cap from tank outlet valve and examine for milk deposits or foreign matter and then sanitize if necessary. Remove cap from transfer hose, prevent contamination of hose cap.
   d.) After the milk has been properly agitated, a sample may be taken. Remove dipper or sampling device from sanitizing solution or sterile container and rinse at least twice in the milk.
   e.) Collect representative sample or samples from the farm tank. When transferring milk from the sampling

equipment, caution should be used to assure that no milk is spilled back into the tank. Do not fill sampling container more than 3/4 full. Close cover on sample container.

f.) The sample dipper shall be rinsed free of milk and placed in its carrying container.

g.) Close cover or lid of bulk tank.

h.) The sample must be so identified with the producer's number at the point of collection.

i.) A temperature control sample must be taken on the first stop of each load. This sample must be labeled with time, date, temperature and producer and hauler/sampler identification.

j.) Place sample or samples immediately into the sample storage case.

6. Pump Out Procedures.

a.) Once measurement and sampling procedures are completed, with the agitator still running, open the outlet valve and start the pump. Turn off the agitator when the level of the milk is below the level that will cause over-agitation.

b.) When the milk has been removed from the tank, disconnect the hose from the outlet valve and cap the hose.

c.) Observe the walls and bottom of the tank for foreign matter or extraneous material and record any objectionable observations on the weight ticket.

d.) With the outlet valve open, thoroughly rinse the entire inside surface of the tank with warm water.

7. Sampling Responsibilities.

a.) All sample containers and single-service sampling tubes used for sampling shall comply with all the requirements that are in the *Standard Methods for the Examination of Dairy Products.* Samples shall be cooled to and held between 0°C (32°F) and 4°C (40°F) during transit to the laboratory.

b.) Means shall be provided to properly protect samples in sample case. Keep refrigerant at an acceptable level.

c.) Racks must be provided so that the samples are properly cooled in an ice bath.

d.) Adequate insulation of sample container box or ice chest shall be provided to maintain the proper temperature of the samples throughout the year.

The State Sampling Surveillance Officer conducts periodic evaluations of sampling procedures. This program will promote uniformity and compliance of sample collection procedures.

II. MILK TANK TRUCK PERMITTING AND INSPECTION.

For the purposes of permitting and the inspection of a milk tank truck, the requirements established in Sections 3. and 5. of the *Grade "A" Pasteurized Milk Ordinance* are to be evaluated at least once each year using FDA form 2399b-MILK TANK TRUCK INSPECTION FORM. (A recommended example of this form is included in this appendix.)

Permitting: Each milk tank truck shall bear a permit for the purpose of transporting milk and milk products. *(*Section 3 of the *Grade "A" Pasteurized Milk Ordinance.)* This permit shall be issued to the owner of each milk tank truck by an authorized regulatory agency. It is recommended that this permit be renewed each year pending satisfactory completion of an inspection as outlined in the following "Inspection: " section.

Reciprocity: Each permit shall be recognized by other regulatory agencies under the reciprocal agreements of the National Conference on Interstate Milk Shipments and supporting documents of the *Grade "A" Pasteurized Milk Ordinance.* A milk tank truck need only bear one permit from an appropriate regulatory agency. A milk tank truck may be inspected at any time when deemed appropriate by the regulatory agency. Absent proof of a current permit and current inspection, when the milk tank truck is inspected by a regulatory agency other than the permitting agency, an inspection fee may be charged to the owner of the milk tank truck. This is necessary to allow a milk tank truck to pickup and deliver in several jurisdictions without the need for more than one permit. A regulatory agency may have the option of inspecting any milk tank truck at any time when milk and milk products are transported in or out of a particular jurisdiction. It is the responsibility of the milk tank truck owner or operator to maintain a current proof of inspection to avoid a re-inspection fee. Disputes concerning reciprocal agreements on milk tank truck inspection between regulatory agencies may be tendered to the Chairman of the National Conference on Interstate Milk Shipments or the chair's designee for resolution.

Inspection: Each milk tank truck shall be inspected at least once each year by a regulatory authority. *(*Section 5 of the *Grade "A" Pasteurized Milk Ordinance.)* A copy of the current inspection report shall accompany the milk tank truck at all times.

When significant defects or violations are encountered by a regulatory authority, a copy of that report shall be forwarded to the permitting agency and also carried on the milk tank truck until the violations are corrected.

Milk tank truck inspection shall be conducted in a suitable location, i.e. a dairy plant, milk receiving or transfer station or milk tank truck cleaning facility. Inspection may not require entry of confined spaces as defined by the OSHA standards. When significant cleaning, construction or repair defects are noted the milk tank truck shall be removed from service until proper confined entry safety requirements can be satisfied to determine cleaning or repairs needed. Cleaning or repairs may be verified by a qualified individual to the satisfaction of the regulatory agency.

Inspection reports completed by regulatory authorities other than the permitting agency shall be forwarded to the permitting agency for verification of annual inspection as required in the 'permitting' section of this appendix. The permitting agency may use these reports to satisfy permit requirements.

Milk Tank Truck Standards: All items of the milk tank truck inspection report fall into the categories of 'Compliance', 'Non-Compliance' or 'Not Applicable (NA)' as determined during inspection.

1.) Samples and Sampling Equipment. (When provided.)

a.) Sample containers shall be stored to preclude contamination.

b.) Sample box shall be in good repair and kept clean.

c.) Sample transfer instrument shall be cleaned and sanitized to insure that proper samples are collected.

d.) Sample transfer instrument container is provided and adequate means for maintaining sanitizer solutions is on hand.

e.) Samples are properly stored to preclude contamination.

f.) Sample storage compartment shall be clean.

g.) Samples are maintained at an acceptable temperature (32ºF to 40ºF) and a temperature control sample is provided.

h.) An approved thermometer is available for use by the sampler. (Accuracy of thermometer checked each six months with check recorded on carrying case.)

2.) Product Temperature 45ºF or Less.

a.) Product temperature must meet all the requirements of Section 7, Item 18r and 17p, Cooling of Milk, of the *Grade "A" Pasteurized Milk Ordinance.*

b.) Product that remains in external transfer systems that exceeds 45ºF is discarded. (This includes pumps, hoses, air elimination equipment or metering systems.)

3.) Equipment Construction, Cleaning, Sanitizing and Repair.

Items A. through K. on THE MILK TANK TRUCK INSPECTION form shall be evaluated according to the following criteria:

a.) Construction and Repair Requirements.

(1.) The milk tank truck and all appurtenances shall meet applicable requirements of Section 7, Item 10p. Sanitary Piping and Item 11p. Construction and Repair of Containers and Equipment, of the *Grade "A" Pasteurized Milk Ordinance*. Equipment manufactured in conformity with 3-A Sanitary Standards complies with sanitary design and construction requirements of this *Ordinance.*

(2.) The interior of the milk tank truck shall be constructed of smooth, non-absorbent, corrosion-resistant, non-toxic material and it shall be maintained in good repair.

(3.) The appurtenances of the milk tank truck includes hoses, pumps and fittings, shall be constructed of smooth, non-toxic cleanable material and shall be maintained in good repair. Where flexibility is required, the fluid transfer system shall be free draining and so supported to maintain uniform slope and alignment.

They shall be easily disassembled and accessible for inspection.

(4.) The cabinet portion(s) of the tank, where applicable, used for storage of appurtenances and sampling equipment shall be constructed to preclude contamination by dust, dirt, and be clean and in good repair.

(5.) The milk tank truck dome lid assembly, vent and dust cover shall be designed to protect the tank and milk from contamination.

b.) Cleaning and Sanitizing Requirements.

(1.) The milk tank truck and all of its appurtenances shall be cleaned and sanitized in accordance with applicable requirements of Section 7, Item 12p, Cleaning and Sanitizing of Containers and Equipment, of the *Grade "A" Pasteurized Milk Ordinance*.

(2.) The milk tank truck shall be cleaned and sanitized prior to first use. When time elapsed after cleaning and sanitizing before first use exceeds 72 hours, the tank must be re-sanitized.

(3.) It is allowable to pickup multiple loads continuously within a 24-hour period provided that the milk tank truck is washed after each day used.

4.) Exterior Condition of Tank.

The exterior of the milk tank truck is properly constructed and in good repair. Defects and damage that would adversely affect products contained in the milk tank truck are pointed out on the inspection sheet and corrective actions are prescribed. Cleanliness of the milk tank truck exterior is evaluated with consideration for existing weather and environmental conditions.

5.) Wash and Sanitize Record.

a.) The bulk milk hauler/sampler shall be responsible for assuring that the milk tank truck has been properly cleaned and sanitized. A milk tank truck without proper cleaning and sanitizing documentation shall not be loaded or unloaded until the proper cleaning and sanitization can be verified.

b.) A cleaning and sanitizing tag shall be affixed to the outlet valve of the milk tank truck until the milk tank truck is next washed. When the milk tank truck is washed, the previous cleaning and sanitizing tag shall be removed and stored at the location where the milk tank truck was washed for a period of no less than 15 days.

c.) The following information shall be recorded on the cleaning and sanitization tag:

(1.) Identification of the milk tank truck.

(2.) Date and time of day the milk tank truck was cleaned and sanitized.

(3.) Location where the milk tank truck was cleaned and sanitized.

(4.) Signature or initials of person who cleaned and sanitized the milk tank truck.

d.) The maintenance of all information on the cleaning and sanitizing tag shall be the responsibility of bulk milk hauler/sampler or the milk tank truck operator.

6.) Location of Last Cleaning.
The location of the last cleaning shall be verified by the regulatory agency during any milk tank truck inspection and recorded on the inspection sheet.

7.) Labeling.
The maintenance of all pertinent information on all shipping documents, shipping invoices, bills of lading or weight tickets is the responsibility of the bulk milk hauler/sampler. A milk tank truck transporting raw, heat-treated or pasteurized milk and milk products to a milk plant from another milk plant, receiving or transfer station is required to be marked with the name and address of the milk plant or hauler and the milk tank truck shall be under a proper seal. All shipping documents must contain the following information as outlined in Section 4. - Labeling of the *Grade "A" Pasteurized Milk Ordinance.*

a.) Shipper's name, address and permit number. Each milk tank truck load of milk shall include the IMS Bulk Tank Unit (BTU) identification number(s) or the IMS listed Plant Number (for farm groups listed with a plant) on the weight ticket or manifest.

b.) Permit identification of hauler, if not an employee of the shipper.

c.) Point of origin of shipment.

d.) Milk tank truck identification number.

e.) Name of product.

f.) Weight of product.

g.) Temperature of product when loaded.

h.) Date of shipment.

i.) Name of supervising regulatory agency at the point of origin of shipment.

j.) Whether the contents are raw, pasteurized, or in the case of cream, lowfat or skim milk, whether it has been heat treated.

k.) Seal number on inlet, outlet, wash connections and vents.

m.) Grade of product.

All information contained on the above described documents shall be verified by the regulatory agency and recorded on the appropriate inspection sheet for any bulk milk tank trucks under inspection.

8.) Vehicle and Milk tank trucks Properly Identified.
It shall be the responsibility of the milk tank truck owner or operator to insure the proper and legible identification of the milk tank truck in their possession.

9.) Previous Inspection Sheet Available.
When a milk tank truck transports milk and milk products from one regulatory jurisdiction to another it is not necessary to inspect each milk

tank truck upon each arrival. Tank truck owners and operators shall carry proof of annual inspection from a recognized regulatory agency. A milk tank truck may be inspected at any time or at the discretion of any regulatory agency responsible for the milk supply.

10.) Sample Chain of Custody.

When samples for official laboratory analysis are transported by any individual where sample chain-of-custody must be established, the driver may be required to carry a valid permit for the collection of samples for official laboratory analysis. As an alternative, a sample case sealed as required by the regulatory agency may be accepted.

DEPARTMENT OF HEALTH AND HUMAN SERVICES PUBLIC HEALTH SERVICE FOOD AND DRUG ADMINISTRATION	TANK SERIAL NO.
	TANK PERMIT NO.
MILK TANK TRUCK INSPECTION FORM	STATE ISSUING PERMIT

NAME OF OWNER OF TANK _____

ADDRESS OF OWNER_____

MILK TANK TRUCK_____

NAME OF DRIVER _____SAMPLER'S PERMIT NO._____

DRIVER'S ADDRESS _____

DELIVERS TO_____INSPECTION LOCATION _____

ADDRESS _____STATE_____

An inspection of your milk tank truck showed violations existing in the items marked below in the non-compliance column. You are further notified that this inspection sheet serves as notification of the intent to suspend this tanker's permit if the violations are not in compliance at the time of the next inspection. Description of non-compliance items may be included in the remarks section.

	Compliance	Non-compliance	NA
1. SAMPLES AND SAMPLING EQUIPMENT (PMO APPENDIX B)			
A. Storage of sample containers			
B. Sample box in good repair, clean			
C. Sample transfer instrument			
D. Sampling transfer instrument container			
E. Sample storage			
F. Sample storage compartments			
G. Samples 32°- 40 °, control temp.			
H. Approved thermometer available			
2. PRODUCT TEMPERATURE 45° OR LESS. (PMO Sec 7, items 18r and 17p)			
A. Temperature of product in tank			
B. Product in external fluid transfer systems that exceeds 45° F is discarded			
3. EQUIPMENT CONSTRUCTION, CLEANING, SANITIZING AND REPAIR (PMO Sec. 7, items 10p and 11p)			
A. Dome lid assembly			
B. Gasket(s)			
C. Vent(s)			
D. Pump(s)			
E. Hose(s)			
F. Hose connection(s)			
G. Hose(s) more than 8 ft in length mechanically cleaned			
H. Valve(s)			
I. Protection from contamination			
J. Interior condition of tank			
K. Other_____			
4. EXTERIOR CONDITION OF TANK (PMO Appendix B)			
5. WASH & SANITIZE RECORD (PMO Sec 7, item 12p)			
A. Is wash/sanitize recording chart available?			
B. Is wash/sanitize tag available?			
I. Recording chart available for cross-reference?			
II. Attached to tanker?			
III. Date of last wash/sanitize (PMO Appendix B)			
IV. Properly completed (PMO Appendix B)			
6. LOCATION OF LAST CLEANING _____			
7. LABELING			
8. VEHICLE AND MILK TANK TRUCK PROPERLY IDENTIFIED			
9. PREVIOUS INSPECTION SHEET AVAILABLE			
10. SAMPLE CHAIN OF CUSTODY			

REMARKS:

INSPECTOR_____STATE_____DATE_____

FORM FDA 2399B

DEPARTMENT OF HEALTH AND HUMAN SERVICES PUBLIC HEALTH SERVICE FOOD AND DRUG ADMINISTRATION	Sample Collector and Title:	
MILK SAMPLE COLLECTOR EVALUATION FORM	Location:	
Evaluation by:_____ Agency:_____	Date:	X = Deviation NA = Not Applicable

DAIRY PLANT SAMPLING – RAW AND PASTEURIZED MILK

EQUIPMENT

1. Thermometer – Approved type ..... ____
- a. Accuracy checked against standard thermometer and adjust every 6 months – Accuracy (+)(-) deviation..... ____
- b. Date checked and checker's initials attached to case..... ____

2. Agitation ..... ____
- a. Use odor-free, pressurized filtered air. or electrically driven stirring or recirculation equipment, all equipment sanitized before use in each successive tank (where applicable)..... ____

3. Sample Transfer Instrument
- a. Clean, sanitized, or sterilized..... ____
- b. Seamless metal tube..... ____
- c. Or metal dipper with long handle; capacity at least 10 ml. ____
- d. Or single-service paper or plastic sampling tube..... ____
- e. Or sanitized sampling cock..... ____
- f. Or other means for removing sample aseptically..... ____

4. Sampling Instrument Case
- a. Proper design, construction and repair..... ____

5. Sample Containers..... ____
- a. Clean, properly sanitized, or sterilized..... ____
- b. Adequate supply, properly stored and handled..... ____

6. Sample Storage Case..... ____
- a. Rigid construction, suitable design to maintain samples at 32º – 40º F., protected from contamination..... ____

7. Cleaning and Sanitizing of Equipment ..... ____
- a. Sampling instruments, clean and dry..... ____
- b. For sanitizing stirrer, sampling tube, or dipper between samples:
  1. Rinse first in one can of clean cold water connected with a continuously flowing source..... ____
  2. Then submerge in a second can of water kept continuously at 180º F. for at least 1 min. ..... ____
  3. Or dipper submerged in a hypochlorite solution at 200 ppm for at least 1 min. (or use other halogens bactericidally equivalent)..... ____
  4. Strengh of sanitizing solution determined with applicable test kit..... ____

SAMPLING PROCEDURES

8. General Sampling Procedures – plants, raw and pasteurized sampling
- a. Hands washed, clean, and dry during sampling..... ____
- b. Milk temperature determined and recorded at all sampling locations..... ____
- c. Temperature control sample provided at first sampling location and labeled with time, date, temperature, and collector identification..... ____
- d. Sample containers legibly identified at collection point..... ____
- e. Sample containers and closures handled aseptically..... ____
- f. Do not hold sample container over the milk when transferring sample into the container..... ____
- g. Sampling instrument protected from contamination before and during sampling..... ____

SAMPLING PROCEDURES (Continued)

- h. Fill sample container not more than ¾ full..... ____
- i. Immediately place samples into sample case..... ____

9. Raw Milk for Pasteurization – trucks and plant storage tanks (see item 8 for applicable procedures)
- a. Agitation time determined as required..... ____
- b. Collect sample aseptically from tank opening (manhole).. ____
- c. Or from pipeline..... ____
- d. Or from balance tank prior to pasteurization..... ____
- e. Or form sanitized sampling-cock..... ____
- f. Do not use hand-disc agitator to mix milk in large storage tanks or trucks..... ____
- g. Sample dipper , when used, rinsed at least 2 times before transferring sample..... ____
- h. Dipper should extend 6 – 8 inches into the milk to obtain representative sample..... ____
- i. Rinse sample dipper or multi-use tubes in tap water after each use and replace in sanitizing solution..... ____

10. Pasteurized Milk and Milk Product Samples (see item 8 for applicable procedures)
- a. Collect samples while still in possession of processor..... ____
- b. Randomly select representative samples of all pasteurized milk and milk products..... ____
- c. Or if necessary, after thoroughly mixing product in container, aseptically transfer representative portion to sterile sample container..... ____
- d. Or from milk dispensers, collect sample direct from spigot of sterile sampling container without sanitizing or flushing the spigot opening..... ____

11. Pasteurized Milk and Milk Products Containers and Closures (see item 8 for applicable procedures)
- a. Collect at least 4 randomly selected, representative multi-use (and when necessary single-service) containers used for packaging..... ____
  1. Do not touch lip or interior of bottles or containers ..... ____
  2. Do not allow milk or water to drip into empty milk containers: by-pass filler valves..... ____
  3. Containers sealed or capped with line equipment..... ____
  4. Or use laboratory sterilized caps, aseptically applied to bottles..... ____
  5. Containers delivered to laboratory without rinse solution, properly protected from crushing or damage ____
  6. Do not store or ship single-service containers in refrigerated cases..... ____

12. Sample Storage and Transportation
- a. Use ice or other refrigerant maintained slightly above milk level in sample container to keep sample temperature at 32° – 40°F., Do not freeze..... ____
- b. Protect against all contamination, including ice water; water no higher than milk level in sample containers; do not bury tops of containers in ice..... ____
- c. Samples and sample data promptly submitted to laboratory..... ____
- d. When shipping samples via common carrier, use tamper proof shipping case with top labeled "This Side Up"..... ____

Remarks:

DEPARTMENT OF HEALTH AND HUMAN SERVICES PUBLIC HEALTH SERVICE FOOD AND DRUG ADMINISTRATION	**MILK TANK TRUCK, HAULER REPORT AND SAMPLER EVALUATION FORM**	Permit No._____ Hauler_____ Milk tank truck_____

Hauler/Sampler_____ Address_____

Owner_____ Address_____

Inspection Location_____

Receiving Plant_____ Daily Pickup No. _____

An inspection of your milk tank truck and/or an evaluation of your sampling procedures has been made. Violations are marked with a cross (X). **Two successive violations of the same item in Section I or II calls for immediate suspension.**

I. MILK TANK TRUCK AND APPURTENCES

1. Construction complies with PMO regulation.....
2. Cleaned after each days use.....
3. Sanitization records/wash tags maintained.....
4. Vehicle properly identified .....

II. HAULER SANITATION PROCEDURES

5. Pickup practices conducted to preclude contamination of milk contact surfaces .....
6. Hands clean and dry, no infections .....
7. Clean outer clothing, no use of tobacco.....
8. Hose port used, tank lids closed during completion of pickup..
9. Hose properly capped between milk pickup operations, hose cap protected during milk pickup .....
11. Hose disconnected before tank rinse.....
12. Observations made for sediment/abnormalities .....
13. Sample collected at every pickup.....

III BULK TANK SAMPLING PROCEDURES

14. Thermometer – approved type.....
    a. Accuracy – Checked against standard thermometer every 6 months – accuracy (+)(-) division.....
    b. Date checked and checker's initials attached to case .....
    c. Sample Transfer Instrument
    a. Clean, sanitized or sterilized and of proper construction and repair.....
15. Sampling Instrument Container
    a. Proper design, construction and repair for storing sample dipper in sanitizer.....
    b. Applicable test kit for checking strength of sanitizer (200 ppm chlorine or equivalent).....
16. Sample Containers
    a. Clean, properly sanitized or sterilized.....
    b. Adequate supply, properly stored or handled .....
17. Sample Storage Case.
    a. Rigid construction, suitable design to maintain samples at 32º - 40ºF, protected from contamination.....
    b. Ample space for refrigerant, racks provided as necessary.....
18. Sample Collection – precautions and procedures
    a. Sampling instrument and container(s) properly carried into and aseptically handled in milk room .....
    b. Bulk tank milk outlet valve sanitized before connecting transfer hose.....
    c. Smell milk through tank port hole .....
    d. Observe milk in a quiescent state with lid wide open and lights on when necessary.....
    e. Test thermometer sanitized (1 min. contact time).....
    f. Non-acceptable milk rejected.....
    g. Dry measuring stick with single-service paper towel .....
    h. Measure milk only when quiescent.....
    i. Do not contaminate milk during the measuring process.....
    j. Agitate milk before sampling at least 5 min. or longer as may be required by tank specifications .....
    k. Do not open bulk tank valve until milk is measured and sampled.....
    l. Temperature of milk, time, date of pickup and haulers identification recorded on each farm weight ticket..
    m. Tank thermometer accuracy checked monthly and recorded when used as test thermometer.....
    n. Temperature control sample provided at first sampling location for each rack of samples .....
    o. Temperature control sample properly labeled with time, date, temperature, and with producer and hauler identification.....
    p. Sample containers legibly identified at collection points .....
    q. Sample dipper rinsed at least two times in the milk before transferring sample.....
    r. Dipper should extend 6-8 inches into the milk to obtain Representative sample.....
    s. Do not hold sample container over the milk when transferring sample into the container.....
    t. Fill sample container no more than ¾ full .....
    u. Rinse sample dipper in tap water, replace in it's container, open milk valve and turn on tank pump.
    v. Immediately take milk sample to the sample case .....
19. Sample Collection – storage and transportation
    a. Sample storage – refrigerant maintained no higher than milk level in sample containers – maintain sample temperature – do not bury tops of containers in ice protect against contamination .....
    b. Deliver samples to laboratory promptly.....
    c. Samples and sample data – submitted to laboratory – if by common carrier, use tamper proof shipping case with top labeled "This Side Up".....

Remarks:

Date Sanitarian Agency

Form 2399a

APPENDIX C. DAIRY FARM CONSTRUCTION STANDARDS; MILK PRODUCTION

I. TOILET AND SEWAGE DISPOSAL FACILITIES

FLUSH TOILETS

Flush toilets are preferable to pit privies, earth closets or chemical toilets at both dairy farms and milk plants. Their installation shall conform to the local or State plumbing regulations. Toilets shall be located in a well-lighted and well-ventilated room. Fixtures shall be protected against freezing. The following shall be considered defects in flush-toilet installations:

1. Insufficient water pressure or volume;
2. Leaky plumbing;
3. Clogged sewers, as evidenced by overflowing toilet bowl;
4. Broken tile lines or clogged disposal field;
5. Access of dairy lactating animals to the effluent below the sewer or disposal-field discharge;
6. Effluent coming to the surface of the ground in the absorption field;
7. Toilet room floor soaked with urine or other discharges;
8. Offensive odors or other evidence of lack of cleanliness; or
9. Location of soil lines, septic tank, absorption field or leaching pit closer to the source of water supply than the limits indicated in Appendix D.

SEPTIC TANKS

Disposal of the wastes from toilets should preferably be into a sanitary-sewer system. Where such systems are not available to a dairy farm or milk plant, the minimum satisfactory method should include treatment in a septic tank, with the effluent discharged into the soil. Where soil of satisfactory permeability is not available, the effluent shall be disposed of in accordance with the rules of the State health authority. It is preferable to treat floor drainage, wastes from washing of utensils, etc., in separate systems. When such wastes are combined with toilet wastes in the septic tank system, careful consideration must be given to the expected flow in the design of both the septic tank and the leaching system.

The septic tank shall be located a safe distance from water sources as determined by consideration of the criteria indicated in Appendix D. The regulatory agency shall review and approve proposed installations prior to the initiation of construction. The location should permit easy access for inspection and cleaning. The site should be chosen to make the largest possible area available for the disposal field.

The size of the septic tank should be based on the average daily flow of sewage, a retention period of approximately 24 hours and adequate sludge storage. The minimum liquid capacity of a septic tank should be 3,000 liters (750 gallons). The outlet should be baffled to prevent scum from passing out with the overflow. The septic tank cover or slab should be watertight, designed to be insect and rodent proof and to withstand any load likely to be placed upon it. Each tank should have a manhole for each compartment, when it is provided with a solid-slab cover. The manhole covering should be made watertight. Septic tanks should be constructed of materials which are not subject to excessive corrosion or deterioration.

DISPOSAL FIELDS FOR SEPTIC TANKS

A distribution box is considered desirable in every field system. The design of the field should be based on the expected sewage flow, the actual absorptive quality of the soil and the total bottom area of the trenches. Tile or perforated pipe designed for this use, of not less than 10 millimeter (4-inch) diameter, is recommended for field laterals. Laterals should be separated by at least three times the width of the trenches, with a minimum of 2 meters (6 feet).

Trenches should be filled with broken stone or screened gravel, from a depth of at least 15 centimeters (6 inches) below the distributing pipes, to a level at least 5 centimeters (2 inches) above the top of the lines. When drain tile is used, joints should be open about 5 millimeters (1/4-inch), and the openings protected by tar paper strips over the top and sides. The aggregate should be protected from loose backfill by means of a separating strip of untreated building paper or similar material. Under no condition should a field with less than 13.9 square meters (150 square feet) of effective absorption area [30 meters of 46 centimeters (100 linear feet of 18-inch) trench] be provided for any individual unit. Maximum length of individual lines should not exceed 30 meters (100 feet). The slope of the field's lateral lines may vary from 5 centimeters (2 inches) to 10 centimeters (4 inches) per 30 meters (100 feet, but should never exceed 15 centimeters (6 inches) per 30 meters (100 feet). It is desirable to have the tile lines within 46 centimeters (18 inches) of the finished grade; however, the total depth of the lateral trenches should never average more than 91 centimeters (36 inches).

In some instances seepage pits may provide a more satisfactory means of disposal of effluent. Walls should be permeable and the liquid capacity should be not less than that of the septic tank. Total wall area should be proportionate to absorptive quality of the soil and to expected sewage flow.

Information as to methods of making percolation tests to determine absorptive quality of the soil may be obtained from State and local health departments. From the same sources, advice may be obtained as to trench areas needed for various numbers of users, in relation to observed percolation rates. In view of their close knowledge of local conditions, it is recommended that such assistance be requested before an absorption system is constructed.

EARTH-PIT PRIVY

The earth-pit privy offers the most suitable type of excreta disposal unit for the dairy farm where water carriage systems of disposal cannot be provided. While there are many different designs in use, the basic elements are the same in all cases.

General: The earth pit should be of such capacity that it may be used for several years without requiring the privy to be moved. Excreta and toilet paper are deposited directly into the pit. Aerobic bacteria break down the complex organic material into more or less inert material. Insects, animals and surface water must be prevented from entering the pit. It is essential that the privy be designed and constructed so that the pit can be kept fly tight.

Location: The location of the privy shall take into account the need to prevent the contamination of water supplies. The criteria of Appendix D shall be applied. On sloping ground, it shall be located at a lower elevation than the water supply. On level ground, the area around both the privy and

water supply should be mounded with earth. If the installation of an earth-pit privy will endanger the safety of the water supply, other methods of disposal must be used.

The site should be accessible to all potential users. Consideration should be given to the direction of prevailing winds to reduce fly and odor nuisances. The privy pit should not encroach within 2 meters (6 feet) of any building line or fence, in order to allow proper construction and maintenance.

Pit, Sill, and Mound: A minimum pit capacity of 4.6 cubic meter (50 cubic feet) is recommended. The pit should be tightly sheathed for a meter or several feet below the earth surface, but openings in the sheathing are desirable below this depth. The sheathing should extend from 25 to 50 millimeters (1 to 2 inches) above the natural ground surface, to provide space between the sill and the upper portion of the sheathing, so that the floor and building will not rest on the sheathing. A reinforced concrete sill should be provided for support of the floor and superstructure. The sill should be placed on firm, undisturbed earth. A earth mound, at least equal in thickness to the concrete sill, should be constructed with a level area 46 millimeters (18 inches) away from the sill in all directions.

Floor and Riser: Impervious materials, such as concrete, are believed to be most suitable for the floor and riser. Because privy units are commonly used as urinals, the use of impervious materials for risers is desirable in the interest of cleanliness. In cold climates, wood treated with a preservative, such as creosote, has been found to be durable and to reduce the problem of condensation. Therefore, in some sections of the country, wood may be used if approved by the State health authority.

Seat and Lid: Both seat and lid should be hinged to permit raising. Material used in construction should be light in weight, but durable. Seats should be comfortable. Lids shall be self-closing. Two objections to self-closing seat lids are: discomfort from the lid resting on the upper portion of the user's back and contact of the oftentimes soiled or frost-covered bottom surface of the lid with the user's clothing. A seat lid has been devised which overcomes these objections. This lid is raised to a vertical position by lifting it from the rear, so that the top surface of the lid is against the user, rather than the bottom surface which is normally exposed to the pit.

Vent: Venting practices differ in many parts of the United States, because of differences in climatic conditions. In some States, particularly those in the South, vents have been omitted entirely and results from this practice appear to be satisfactory. Vents may pass vertically from either the pit or the riser, through the roof or directly through the wall near the floor. The vertical vent from pit or riser may lead to a horizontal vent passing through both walls or diagonally across a corner of the building.

In all cases, vents are screened. Galvanized, steel-wire screens dipped in paint, copper screens and bronze screens are used. Nearly all designs employ a screen with 6 meshes to the centimeters (16 meshes to the inch). Hardware cloth is used to cover the outside entrance to vents to prevent entrance of large objects which would clog the vent.

It is stated by some authorities that venting serves no useful purpose and that vents should be eliminated from earth-pit privies. Satisfactory recommendations with respect to vents can be made only after certain technical problems have been solved. The most important of these is the moisture condensation problem due to the

temperature difference between the pit and the superstructure. The use of a cold wall, to condense moisture within the pit, has been suggested. In view of the uncertain value of venting, no recommendations are offered.

Superstructure: Privy structures are standardized to some extent. The majority are 1.2 meters by 1.2 meters (4 x 4 feet) in plan, with a height of 2 meters (6.5 feet) in front, and 1.8 meters (5.5 feet) at the rear. A roof with a 1-to-4 slope is commonly used. The building should be constructed of substantial material, painted for resistance to weather and fastened solidly to the floor slab. Proper roof overhang should be provided to dispatch rainwater from the roof away from the mound.

The roof should be constructed of watertight materials, such as wood, composition shingles or metal. Achieving ventilation of the building by omitting siding beneath the roof is common, except in cold climates, where the siding is usually perforated. Windows are sometimes used in the northern latitudes. Provision of coat hooks is desirable.

Defects in Earth-Pit Privies: The following shall be considered defects in pit-toilet installations:

1. Evidence of caving around the edges of the pit;
2. Signs of overflow, or other evidence that the pit is full;
3. Seat covers broken open or not self-closing;
4. Broken, perforated or unscreened vent pipe;
5. Uncleanliness of any kind in the toilet building;
6. Toilet room opening directly into milkroom; and
7. Evidence of light entering pit, except through seat when seat cover is raised.

MASONRY-VAULT PRIVY

A masonry-vault privy is essentially a pit privy in which the pit is lined with impervious materials and in which provision is made for the removal of excreta.

Function: Masonry vaults are used chiefly where the ground water table is close to the ground surface, or where it is necessary to prevent contamination of nearby water courses, wells and springs. They are also recommended for use in limestone formations, to prevent contamination of water streams in the solution channels of the limestone. This type of disposal unit is satisfactory only where adequate maintenance and servicing are assured.

Construction: Masonry vaults may be constructed of brick, stone or concrete, with the latter preferred. Vault must be watertight to keep out ground water and to prevent leakage of the vault's contents. A readily accessible cleanout door is necessary. It shall be constructed to prevent access of flies, animals and surface water to the vault's contents. The floor of the superstructure, which forms a partial covering for the vault, must be impervious; concrete is recommended.

CHEMICAL TOILET

In some areas where pit toilets might menace water supplies, where a sufficient volume of water for the operation of flush toilets is not available and where there is no prohibitive statute or ordinance, the chemical toilet may be accepted. *Provided* that it:

1. Has a receiving tank of acid resisting material with an opening easily accessible for cleaning;
2. Has a bowl, of nonabsorbent materials, sufficiently elevated above the receiving basin to prevent splashing the user;
3. Has the tank and bowl vented with at least a 7.6 centimeters (3-inch) screened pipe, preferably of cast iron, extending at least 60 centimeters (2 feet) above the roof line;
4. Has the tank charged, at proper intervals, with chemicals of a bactericidal nature and concentration;
5. Is placed in a well-lighted and well-ventilated room which does not open directly into the milkroom; and
6. Has an effective method of final disposal, including burial, or a leaching vat or a cesspool where it will not endanger any water supply.

Type: Chemical toilets differ from privies, in that they are commonly placed inside the dwelling, whereas privies are generally located apart from the dwelling. There are, in general, two types of chemical toilets:

1. The commode type, in which a pail containing a chemical solution is placed immediately below the seat; and
2. The tank type, in which a metal tank holding the chemical solution is placed in the ground directly beneath the seat. A pipe or conduit connects the riser with the tank. Tanks are usually cleaned by draining to a subsurface seepage pit.

Function: Toilets of this type are predominant in cold climates, where it is found desirable to have toilet facilities in or near the home, and where running water is not available for flush toilets.

Chemicals: Sodium hydroxide is commonly used to prepare the caustic solution for either commode or tank type chemical toilets. The chemical is dissolved in water and placed in the receptacle. The purpose of the chemical solution is to emulsify the fecal matter and paper and to liquefy the contents. In order to accomplish this action, the chemical solution must be maintained at proper strength and the mixture must be agitated each time the toilet is used. Odors are produced chiefly by the liberation of ammonia, when the caustic solution is weak, or when mixing by agitation is not carried out.

Difficulties are encountered when the caustic solution becomes diluted and fails to emulsify the fecal matter. When this occurs, the chemical solution breaks down, due to absorption of carbon dioxide from the air, and the solution ceases to be caustic. The decomposition of fecal matter which takes place in such instances produces foul odors.

Sludge Disposal: Disposal of the resultant mixture is a disagreeable task. In the case of small commode types, the usual method of disposal is burial in the earth. Tank units are usually so constructed that the tank is emptied into a seepage pit. When emulsification is not complete, particles of paper clog the seepage pit requiring corrective measures. Because of fundamental differences in design, chemical toilets resemble other types of privies only

in the seat construction and manner of venting. Usually, risers or stools manufactured commercially are used.

Chemical toilets shall be used only where there is assurance of constant maintenance and where safe disposal of the contents is assured. Neither sludge nor liquid effluent from chemical toilet tanks shall be discharged to a sewage system in which treatment processes are involved. Otherwise, the chemical constituents of the sludge or liquid effluent may seriously interfere with the biological action upon which such treatment processes depend.

Defects: The following shall be considered defects in a chemical toilet installation:

1. Violation of any of the above requirements;
2. Disagreeable odors indicating to-infrequent charging with chemicals or inadequate concentration of chemicals in the charge;

Evidence of improper disposal of the tank contents; and

4. Lack of cleanliness in the toilet compartment and room.

CONSTRUCTION PLANS

Detailed construction drawings for septic tanks, pit privies, masonry-vault privies and chemical toilets complying with State regulations may be secured from the State health authority.

II. GUIDELINE #45 - GRAVITY FLOW GUTTERS FOR MANURE REMOVAL IN MILKING BARNS

As Published by Northeast Dairy Practices Council

The gravity flow gutter concept for manure removal comes from Europe. Manure falls into a deep gutter in the barn floor and then flows by gravity to a cross channel or outlet pipe to storage. A low (8-20 centimeters) (3" or 8") dam retains a lubricating liquid layer over which the manure flows (Fig. 1). After 1 to 3 weeks in a newly started gutter, the manure surface forms an incline of 1-3% above the dam. Then the manure moves continuously over the lip. The gutter must be deep enough to contain manure sloped at this shallow angle.

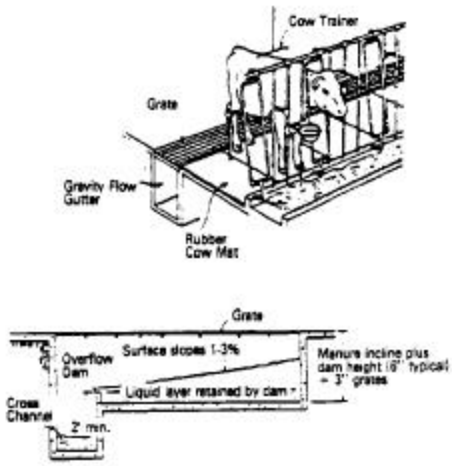

Figure 1. Side Cross Section of a Gravity Flow Gutter

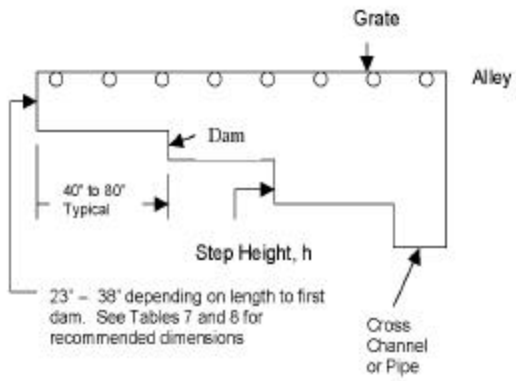

Figure 2. Stepped Gravity Flow Gutter

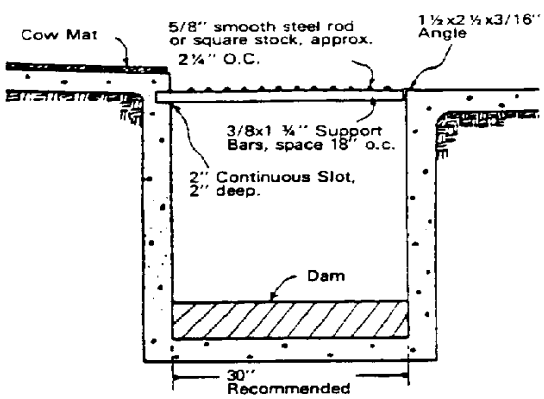

Figure 3. Cross Section of Typical Gutter and Grate

Because manure moves by its own weight, no mechanical equipment is required to remove it from the barn. Generally the cost of the gutter and cover grates is less than the cost of installing, operating and maintaining a mechanical cleaner.

This system is neither a flush gutter, where 115 to 225 liters (30 to 60 gallons) of water per cow is needed to remove manure from the gutter, nor is it an under-barn storage which is open to the barn. Rather, it is a conveying channel that carries the manure from behind the cow to the outside storage. The top surface of the slurry has been recorded to move 3 meters (10 feet) per hour.

CONSTRUCTION

GUTTER DEPTH: Gutter depth depends on the length of the gutter and the angle of incline of the manure surface. Design in this guideline assumes the manure surface forms a 3% slope. Most diets form wetter manure, and with no bedding the slope may be 1% less. The bottom should be level so the dam will hold a uniform liquid layer. The maximum depth of the gutter at the end opposite the discharge shall not exceed 138 centimeters (54 inches) (4-1/2 feet). In addition, the outlet shall be clear of obstructions.

The depth includes an allowance for a 15 centimeters (6 inches) dam and 8 centimeters (3 inches) deep grates.

The maximum manure depth may be decreased by adding steps. The depth from the bottom of each dam to the bottom of the next level varies depending on the distance between steps (Fig. 2).

Table 6. Slot Size vs. Cattle Age

Age (Months)	1-6	6-12	12-24	Over 24
Slot Size (in.)	1 – 1 1/8	1 1/8 – 1 3/8	1 3/8 – 1 5/8	1 ½ - 1 5/8

WIDTH OF GUTTERS: The bottom of the gutter shall not exceed 91 centimeters (36 inches) in width. A 76 centimeter (30 inch) wide gutter is recommended. The gutter opening may be narrowed to 50 - 60 centimeters (20 - 24

inches) in order to reduce the size and costs of grates.

OVERFLOW DAM: The dam retains a lubricating liquid layer over the channel which is essential to maintain flow. Typical heights range between 8 and 20 centimeters (3 and 8 inches). Dams, if removable, would facilitate total cleanout, when and if necessary. Concrete, a steel plate, or a plank may be used to construct the dam. Caulking may be needed to seal the dam.

Table 7. Gravity Flow Gutter Depth vs. Length for Manure from Lactating Animals

Length		Depth	
Meters	Feet	Cm.	Inches
12	(40)	58	(12)
18	(60)	78	(18)
24	(80)	96	(24)
30	(100)	114	(30)
36	(120)	132	(36)

LENGTH: A 70 meter (226 foot) long gutter has worked, but typical distances between dams range from 12 to 24 meters (40 to 80 feet).

Longer channels must be deeper; hence, they may cost more because they require more concrete and stronger forms.

Table 8. Step Height vs. Length for Stepped Gravity Flow Gutters

	Step Height	
Length between Dams	For 1.5% manure incline	For 3% manure incline
40’	7”	14”
50’	9”	18”
60’	11”	22”
70’	13”	25”
80’	15”	29”

GRATES: Commercial steel grates for stall barns and concrete slats for freestall barns are generally available. Table 7 suggests slot widths. Grates for stall barns are made from round or flat steel stock.

CROSS CHANNEL: The cross channel may be constructed like the gutter. At least a 60 centimeters (2 foot) drop from the top of the dam to the bottom of the cross channel is suggested to prevent backup of manure into it. The channel may be extended directly to storage. The slurry should enter the bottom, to prevent storage gases and cold air from returning up the channel. Channel depth, below grade, should be sufficient to prevent freezing.

Gravity flow via a concrete, steel or plastic pipe may also be used to transfer manure to the bottom of the outside storage. Pipe as small as 38 centimeters (15") diameter has been used successfully. However, 60 centimeters (24") diameter pipe is recommended.

Do not empty channels into large sumps or pits within, or having direct openings into the barn. These storages will

produce gas and odors that will be drawn into the barn through the ventilation systems.

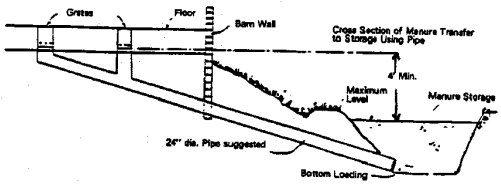

Figure 4. Manure Transfer to Storage

MANAGEMENT

Flooding of Gutters: Prior to stocking the building, fill the gutters with 8 centimeters to 15 centimeters (3 to 6 inches) of water to start the lubrication layer.

BEDDING USAGE: The type and amount of bedding used is important to successful operation. Up to .5 kilogram (one pound) per lactating animal per day of sawdust, fine cut shavings or peanut hulls still allows the system to work. Some have worked with long straw bedding, but it is not recommended. More bedding or long straw increases manure stiffness and may clog the gutter. Lactating animal mats allow minimum bedding use. Sometimes water may need to be added, depending upon the feed ration and amount of bedding used.

WASTAGE AND DEPOSITS: Keep feed and hay out of the gutter. Barn lime and soil brought in from outside may settle to the bottom. For this reason, the overflow dam, on some gutters, is removable for clean-out. Buildup of solids has not been a problem under normal management, although the gutter will need cleaning if it has not been used for some time. Watch for islands of solids, especially where excess bedding or feed builds up. Cut these islands free of the walls to keep them flowing.

CLEANING GRATES: Grates need cleaning at least weekly and, preferably, daily. A broom connected to a hose makes the job easy.

FLIES AND ODORS: Flies have caused little or no problems. Biodegradable oil such as mineral oil may be sprayed on the manure surface to control them. Little or no odors have been observed in barns with good ventilation. There is no need to install fans to ventilate the gutters.

III. CONVALESCENT (MATERNITY) PENS IN MILKING BARNS AND STABLES

While the requirement for concrete floors in milking barns and stables is necessary for good sanitation, climatic conditions in some areas of the country has created a need for convalescent (maternity) pens to be located in milking barns and stables.

Therefore, convalescent pens may be allowed in the milk barn or stable. *Provided* that the following requirements are met:

1. All floors in the production milking facility, with the exception of the convalescent pens, must be of an impervious surface, with slopes for drainage as currently listed in the regulations.
2. Milk from animals milked in convalescent pens with non-impervious floors must not enter the distribution system or be sold.
3. Routine milking in pens shall not be allowed.
4. Pens must be located in a location so as not to contaminate milk holding transfer facilities or water supplies. Convalescent pens cannot be within 15 meters (50 feet) of a well.

5. A minimum of a 15 centimeters (6 inch) curb shall be provided on all exposed sides of the pen(s).

6. Convalescent pens shall be well bedded, clean and dry at all times.

7. No water faucet or drinking fountain shall be located within the curbed area.

8. State inspectors, at their discretion, may require cleaning and/or reconstruction of such pen base at intervals as necessary when pens present a sanitation problem.

9. It is recommended that the number of these pens be limited to 1 per 50 lactating animals.

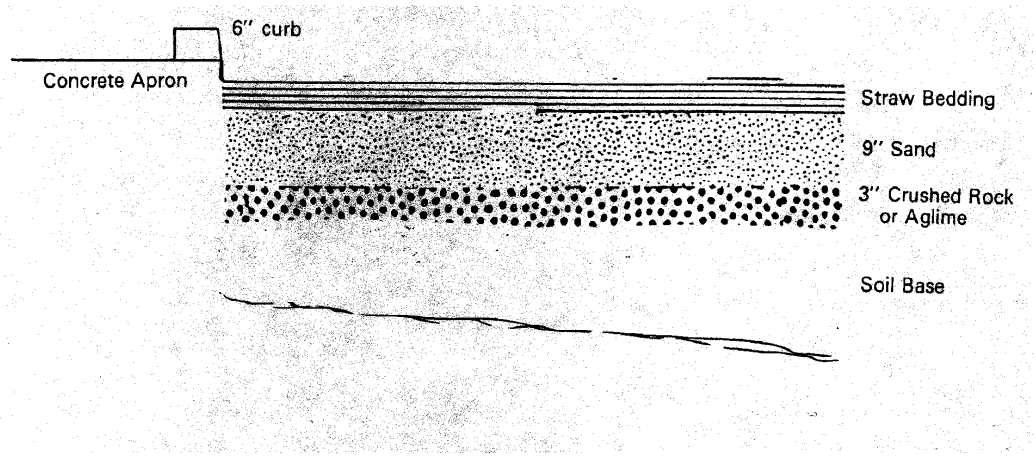

Figure 5. Side Cross Section of a Convalescent Pen

IV. GUIDELINES FOR CONVENTIONAL STALL BARN WITH GUTTER GRATES OVER LIQUID MANURE STORAGE

INTRODUCTION

The use of liquid manure storage under milking barns can be a cost, labor and energy efficient method for handling dairy animal wastes. This type of system can aid in pollution control and will provide a safe and healthy environment for cattle and humans under the following guidelines:

1. Plans for the construction of a conventional stall barn, with gutter grates over liquid manure storage, shall be submitted to the regulatory agency for approval before work is begun. Upon completion of the work, the builder shall furnish the purchaser with a signed written statement certifying that the system is constructed so as to be in full compliance with these guidelines.

2. The storage capacity of the liquid manure tank shall be for a minimum of nine months.

3. A negative pressure mechanical ventilation system (Figures 6 and 7) must be installed to meet the following requirements:

a. Provide a maximum exhaust capacity of 40 air changes per hour from the occupied area. Of this total, about one-half, 20 air changes per hour shall be considered the cold weather part of the system and shall be exhausted through the manure storage area. The remaining 20 air changes per hour shall be considered the warm weather part of the system and shall be exhausted through the barn walls.

b. Of the 20 air changes exhausted through the manure storage area

there shall be a minimum *continuous* exhaust of 4 air changes per hour. The additional cold weather capacity of about 16 air changes per hour shall be thermostatically controlled. All fans exhausting from the manure storage area shall be installed in permanent fan houses built on the exterior wall of the barn and connected directly to the manure storage area. These fans must be *single-speed* with a certified delivery rating against 6 millimeters (1/4-inch) water gauge static pressure. One pit fan must operate continuously. Air flow must be from the occupied area through the gutters. The use of variable-speed fans is prohibited.

c. Fans supplying the additional summer capacity shall be mounted to discharge directly through the barn walls. They may be mounted on the outside of the building and the openings closed with insulated panels in cold weather, or when mounted in the walls be protected with an inside insulated cover to eliminate condensation and frost formation on the shutters and mountings. Warm weather fans are to be located on the same side of the barn as the pit fans. They must have a certified delivery rating against 3 millimeters (1/8-inch) water gauge static pressure and should be single speed.

d. All fans, except those providing the minimum continuous exhaust rate are to be controlled by thermostats located away from the barn walls. All pit fans are to be in operation before any of the wall fans are started. Each fan shall be individually protected by an electrical thermal overload device of the proper size.

e. *Calculation method.* To calculate the fan capacity in cubic feet per minute (cfm) for a particular barn, multiply the length times the width times the average ceiling height, all in feet, to obtain the volume. Divide the volume by 15 to obtain the minimum continuous capacity of 4 air changes per hour in cfm (4 x 15 = 60 minutes).

$$\frac{W \times L \times H}{15} = \text{cfm}$$

Example: Barn width 36', length 160' and average ceiling height 8'-6". This would be a reasonable size for 60 stalls and two pens.

$$\frac{36 \times 160 \times 8.5}{15} = 3{,}264 \text{ cfm}$$

minimum continuous exhaust

Total cold weather capacity of 20 air changes per hour equals 5 times the minimum capacity. 3,264 x 5 = 16,320 cfm.

Use two fans of 3,264 each and two fans of 4,896 cfm each to make up the total. Build two fan houses. Mount one 3,264 cfm and one 4,896 cfm fan in each. *Operate one 3,264 cfm fan continuously.* Thermostatically control the second 3,264 cfm fan at 40°F. Control the two larger fans with thermostats set at 6°C (43°F) and 8°C (46°F). Divide the summer capacity of an additional 20 air changes per hour among 3 fans of 5,440 cfm each. Locate these fans in the walls. Control them with thermostats set to 10°C – 13°C (50°F – 56°F). Approximate locations for all fans is shown in Figure 6. Fans of the exact calculated capacity are usually unavailable. Always select those having a slightly higher rather than lower capacity.

f. Adequate incoming fresh air, to enable the fan exhaust system to function as designed, must be provided. A continuous slot inlet with manual adjustment on one side is recommended, as shown in Figure 7., to provide uniform fresh air distribution throughout the barn. Adjustment of the slot opening opposite the fans is to be done manually for cold and warm weather conditions. Careful construction of

the fresh air intake system is essential to the satisfactory performance of the ventilation system.

4. A stand-by generator to supply electric current to the ventilation system, in the event of a power failure, shall be provided.

5. Construction requirements:

a. The floor system over the pit shall be designed to safely support all animal weight, plus the possibility of a tractor which may be needed to remove a sick or dead animal. Agitating and pumping of the stored manure shall be done through annexes built outside the barn (See Figures 6 and 7). Service alley floor and lactating animal stall platforms shall be constructed to drain to the grated gutter tank opening located between the lactating animal stall and service alley.

b. Waste water from the milk-house can be discharged into the pit. Sanitary (toilet) waste shall not be disposed of in the manure storage tank. When waste water from the milkhouse is discharged into the pit a drop pipe must be connected to the discharge line so that the liquid waste will be deposited beneath the surface of the tank contents to prevent turbulence and possible odor production.

c. Grates over the gutters (tank slot openings) shall be of sufficient strength to support all applied loads. A suitable grate design is one using 16 millimeters (5/8") smooth steel bars running the length of the open gutter. The distance between the center of the first bar and the vertical face of the stall platform should be 57 millimeters (2-1/4 inches). The remaining bars should be spaced 63 millimeters (2-1/2 inches) center-to-center. Support bars crossing the gutters should be 19 millimeters (3/4 inch) diameter and spaced 40 centimeters (16 inches) center-to-center.

6. Little or no bedding can be used with this system, rubber mats or equivalent, and lactating animal trainers shall be installed at the time the barn is constructed. Daily cleaning of grates with a stiff broom or scraper is recommended.

7. Other construction criteria and management practices recommended for stall dairy barns should be followed.

8. Requirements for emptying holding tanks:

a. Remove all animals and post signs on all doors that no one is to enter the milking barn during the time the tank is being agitated.

b. All pit fans must be operating during agitation and emptying.

c. All milkhouse and feed storage area openings (doors, windows, etc.) must be closed.

d. The milking barn must remain evacuated by animals and people for at least one hour, after agitation of the holding tank is completed.

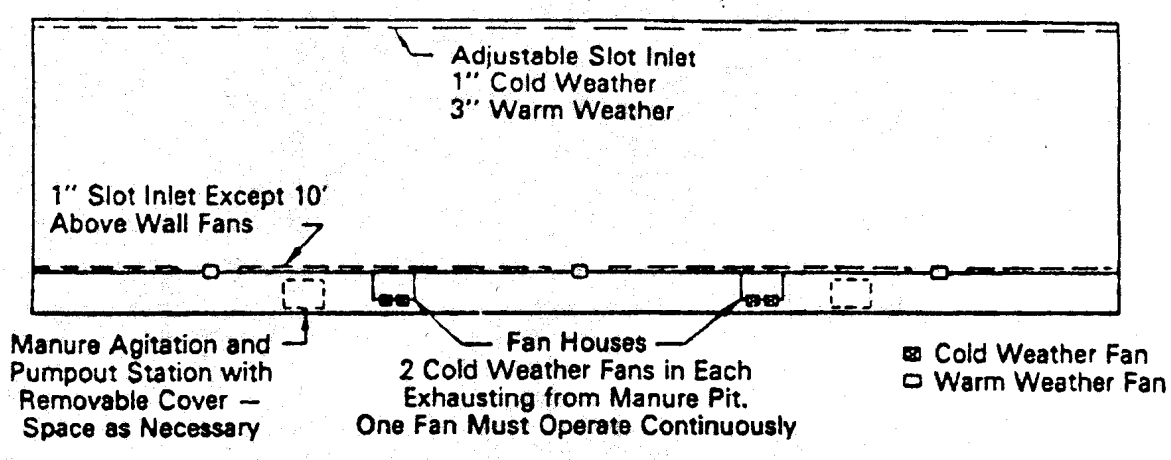

Figure 6. Schematic Diagram Showing Suggested Exhaust Fan Locations for a Typical Stall Dairy Barn with Gutter Grates Over Liquid Manure Storage

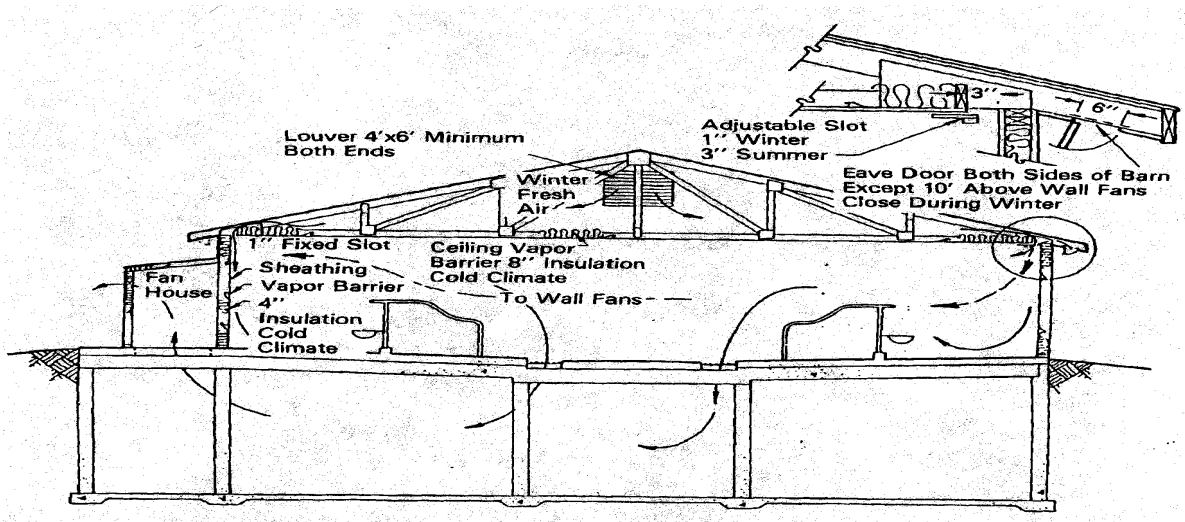

Figure 7. Schematic Diagram Showing General Pattern of Ventilation Air Movement, Slot Inlet Design and Fan House for Pit Fans

V. DAIRY--CONSTRUCTION AND OPERATION

MILKING BARN, STABLE OR PARLOR

Numerous factors, including the size and topography of the farm, the availability of utilities, the condition and disposition of existing buildings, the dairy operator's ultimate goals for the enterprise, and the operator's construction budget serve to make each milk producer's herd housing problems individual and unique.

While there has been a tendency for workers to develop strong convictions about the practicability of given housing or milking systems, there is little doubt that the success or failure of most dairy farm operations may be traced to good or poor planning. When the unique problems of each system in its individual applications are given proper consideration, the job of producing clean milk is made easier and compliance with regulations is simplified. For example, operators of barns in which lactating animals are housed and milked will find that efficient ventilation not only reduces condensation but also relieves the problem of dust and mold on walls, ceilings and windows. When window sills are sloped or windows set flush with interior walls in stanchion barns the accumulation of dust and unwanted miscellaneous items is similarly lessened. Covered recessed light fixtures remain clean longer and are less subject to damage than those projecting from the ceiling.

Operators of milking parlor loose-housing systems, on the other hand, will value design features such as mechanically operated doors, which speed up animal traffic, and glazed wall finishes, which cut down the time required for proper post-milking washup of the parlor. Cleaner lactating animals result from proper planning and management of exercise yards and bedded areas. Nine square meters (one hundred square feet) of surfaced yard and not less than 5 square meters (50 square feet) of bedded space are recommended for each animal to be accommodated. Provisions must also be made for the removal at least daily of manure from exercise yards and traffic lanes. Operators utilizing loose-housing have shown considerable interest in free-stall housing. Many workers have concluded that it provides the solution to the problems of unclean lactating animals and excessive bedding demands which have plagued loose-housing in past years. Its features should be carefully studied by milk producers planning new construction or large-scale changes in existing housing.

Adequate light must be available in all work areas in the milking barn, stable or parlor. Because many dairy functions are frequently performed after dark, it is important that the required minimum of 10 foot-candles of illumination be available from artificial sources. While absolute certainty of compliance with this requirement can only be confirmed by the use of a light meter, experience has shown that milking barns which otherwise meet the standards of this *Ordinance* will be properly lighted when equipped with one 100-watt bulb (or its fluorescent equal) for each three stanchions or per 3 meters (10 linear feet) of walkway behind each row of lactating animals in face in barns or between rows of lactating animals in face-out barns. In addition, a smaller number of bulbs, equally spaced, is recommended for feed alleys in front of the lactating animals. When natural light is utilized, a minimum of .37 square meter (4 square feet) of window space for each 5.6 square meter (60 square feet) of floor space is recommended.

Construction plans and suggestions for the various systems of animal management are available to the sanitarian and the dairyman from numerous sources, including the USDA, the county extension agent, farm periodicals and the trade associations serving the building supply industry.

MILKHOUSE OR MILKROOM

Milkhouses should be large enough to provide adequate space to meet present needs and should take into account the prospect of future expansion. Installed milkroom equipment should be readily accessible to the operator. Aisles should be at least 76 centimeters (30 inches) wide, with added allowance at the outlets of bulk cooling/holding tanks, adjacent to wash-and-rinse vats and where operational conditions warrant. It is especially important that the space available to bulk cooling/holding tanks and mechanical cleaning systems be adequate to permit their disassembly, inspection and servicing.

Floor drains should not be located under bulk cooling/holding tanks unless there is sufficient room for servicing. Floor drains should not be located directly under the outlet of a bulk cooling/holding tank. Drains and waste disposal systems should be adequate to drain the volume of water used in rinsing and cleaning.

Milkrooms should be well ventilated. Proper ventilation not only avoids the obvious disadvantages of condensation on equipment and walls, it also lengthens the useful life of the building and its equipment. The constant need for renewal of painted surfaces, the repair of wooden fixtures and frames and the removal of algae and mold from walls and ceilings of poorly ventilated milkrooms can represent a continuing expense to the operator.

Where possible, windows should be placed to provide cross ventilation. In addition, one or more ceiling vents should be located to receive water vaporizing from wash-and-rinse vats and other sources of evaporative moisture.

Glass brick is sometimes substituted for windows in milkroom construction. In these instances, mechanical ventilation must be provided. A system affording filtered positive air pressure is recommended over exhaust ventilation, as the latter frequently draws dust, insects, and odors into the milkroom.

The great demand for water under pressure in milkroom operations has emphasized the importance of protecting plumbing from freezing. Devices which have proved effective include, the insulation of water lines, the use of wrap-around heat tape, infrared lamps, and thermostatically controlled space heaters.

Insulated milkrooms make protection against freezing easier and more economical, and offer the additional advantage of greater comfort for the operator. The factor of personal convenience frequently results in better performance by the operator, with subsequent benefits to milk quality.

Automated milking and mechanical cleaning systems of milking equipment has increased the use of hot water in the milkroom. The following table will indicate the volumes of water required to fill 30 meters (100 feet) of pipeline of varying diameters:

Table 9. Work Water Volume of Various Sized Pipelines	
Pipe diameter	
Inches	Gallons
1	4.7
1 ½	9.2
2	16.3

Since most cleaning installations employ a pre-rinse, followed by wash-and-rinse cycles, this figure actually represents only one-third the usual milking-time demand for heated water. Also, it does not include the "take up" of collecting jars, pumps, rubber parts, etc.

Udder washing, bulk cooling/holding tank cleaning and similar milkroom tasks offer additional uses for hot water.

Sanitarians should compute the hot water demand of the individual milking systems under their supervision and require that not less than the minimum amount be available at all times. Milk producers should be made aware of the fact that effective cleaning of mechanically cleaned installations is impossible without adequate hot water and should be encouraged to provide a supply which exceeds their expected need. Such planning avoids emergency shortages and allows for normal expansion of the herd and facilities.

Detailed plans for milkhouses, as well as recommendations on hot water needs, insulation, lighting and ventilation are available from power companies, building supply associations, county extension agents and State universities.

Refrigeration, electrical or mechanical systems powered by gasoline or diesel engines have no place in a milkroom, milking barn, or in any communicating passageway between the milkroom and milking barn. Such equipment is characteristically given to oil leakage and the discharge of fumes. The spaces occupied by it are difficult to keep clean and frequently become gathering places for trash and flammable materials. With effective planning, these engines and their accessory equipment can be located, without detriment to their performance, in a separate room or building adjacent to the barn or milkhouse.

MILKING METHODS

Milking methods must be geared to permit the efficient withdrawal of milk without introducing undue numbers of bacteria or causing injury to the udder.

In addition to assessing the nation's milk producers a cost which has been estimated to approach $500 million annually, mastitis has been found to pose serious public health hazards. The most widespread of these is a gastrointestinal disorder caused by toxins produced by certain strains of staphylococci.

It has been known for many years that a relationship exists between mastitis and milking practices. While not all the facts are known about mastitis, it is abundantly clear that its control is enhanced by use of mechanically sound milking equipment and good milking practices. The National Mastitis Council has described a satisfactory milking system as one which:

1. Maintains a stable vacuum in the teat cup and at a level adequate for completely milking most udders in 3 to 5 minutes;
2. Does not stress the tissues of the teat by excessive stretching and ballooning;
3. Produces massage without harsh action; and
4. Is designed so that the entire system can be sanitized efficiently and satisfactorily.

The Council considers proper milking procedure to include the following:

1. Before the milking unit is applied to the udder the operator takes 30 seconds to prepare the lactating animal in the recommended manner to obtain milk letdown, and the milking machine should be applied immediately thereafter;
2. The teat cups are attached in a manner to limit the volume of air drawn into the system;
3. The teat cups are positioned as low on the teats as practicable;
4. The operator stays near the machine and, at the end point of milk removal, the claw is briefly pulled down to open the teat cavity and remove the strippings. Stripping by machine should not extend over a period of more than 15 to 20 seconds. Prolonging stripping can be injurious to the udder;
5. Before removing the machine, the vacuum to the teat cups is broken and the cups removed in a gentle manner; and
6. To avoid over-milking, the operator should limit the number of machines in use. Two bucket type units, two movable pipeline units or three fixed units, in a walk-through barn, usually represent maximum workloads with conventional milking systems.

Hooded, or small-mouthed pails, may be used for carrying only that milk which has been drawn into them by hand-milking. Their extended use as carrying pails is considered hazardous in view of their inability to be covered or otherwise protected from flies, dust, splash, etc.

DRUG RESIDUE AVOIDANCE CONTROL MEASURES

Animal identification and record keeping are critical for avoiding milk residues. Producers should establish systems to ensure that animal drugs are used properly and be able to provide evidence that adequate control over the administration of drugs to prevent residues in milk and/or meat has been implemented. These control systems should accomplish the following objectives:

1. Identification and tracking the location of treated animals.

2. Maintenance of a system of medication/treatment records that, at a minimum, records the identity of the animals(s) being treated, the date(s) of treatment, the drugs(s) or other chemicals administered, who administered the treatment, the dosage, and the prescribed withdrawal time for milk and slaughter.

3. Quarantine/segregation of treated animals or other means to preclude the sale of milk or offering of treated animals for sale for slaughter prior to the end of the prescribed withdrawal time.

4. Education of all farm personnel involved in treating animals on proper drug use and methods to avoid marketing adulterated milk or meat for human food.

INSECT AND RODENT CONTROL

The complete elimination of flies from the farm premises is practically unattainable. However, a major reduction of fly infestation is obtainable by the dairy farm operator who conscientiously follows a sustained program of sanitation, screening and the proper use of insecticides.

The milk producer or plant operator must be continually aware of the potential hazard to people and animals which is inherent in most pesticides, including insec-

ticides and rodenticides. It is important that they employ only those insecticides and rodenticides which are recommended by competent authority for the insect and rodent problems they seek to overcome, and that they follow implicitly the manufacturer's label directions for their use. Questions on the use of pesticides should be referred to the supervising regulatory agency and/or county agricultural agent.

Effective rodent control, like insect control, is dependent on sanitation for much of its success. The careful elimination of trash and woodpiles; the rodent-proofing of feed bins, corn cribs and similar structures; the prompt removal of spilled feed and manure to places of ultimate disposition; and the deliberate elimination of protected harborage areas in farm buildings, all tend to discourage rodents near the dairy farm. Such a program, also pays excellent dividends in feed savings, lowered maintenance costs for farm buildings, reduced fire hazards and lessened risk of disease outbreaks among farm animals.

Anticoagulant poisons (Warfarin, Fumarin, etc.) have offered improved means of controlling rodents on the farm. Used according to directions, and with due precaution against their consumption by domestic animals, these chemicals should keep the rodent population in check while additional preventive programs are instituted.

REFERENCES

Bates, D.W.
How to Plan Your Dairy Stall Barn, M-132 (Revised 1972) University of Minnesota.

Midwest Plan Service, Ames, Iowa, Plan No. 72327, Dairy Barn, 60 Tie Stalls, Gable Roof, Liquid Manure 1974.

Bates, D. W. and J. F. Anderson, 1979.
Calculation of Ventilation Needs for Confined Cattle, J. American Veterinary Medical Association 1979.

Midwest Plan Service, Ames, Iowa, Dairy Housing and Equipment Handbook 1985.

APPENDIX D. STANDARDS FOR WATER SOURCES

I. LOCATION OF WATER SOURCES

DISTANCE FROM SOURCES OF CONTAMINATION

All ground water sources should be located a safe distance from sources of contamination. In cases where sources are severely limited; however, a ground water aquifer that might become contaminated may be considered for a water supply, if treatment is provided. After a decision has been made to locate a water source in an area, it is necessary to determine the distance the source should be placed from the origin of contamination and the direction of water movement. A determination of a safe distance is based on specific local factors described in the section on "Sanitary Survey."

Because many factors affect the determination of "safe" distances between ground water supplies and sources of pollution, it is impractical to set fixed distances. Where insufficient information is available to determine the "safe" distance, the distance should be the maximum that economics, land ownership, geology and topography will permit. It should be noted that the direction of ground water flow does not always follow the slope of the land surface. Each installation should be inspected by a person with sufficient training and experience to evaluate all of the factors involved.

Since safety of a ground water source depends primarily on considerations of good well construction and geology, these factors should be the guides in determining safe distances for different situations. The following criteria apply only to properly constructed wells, as described in this appendix. There is no safe distance for a poorly constructed well.

When a properly constructed well penetrates an unconsolidated formation, with good filtering properties, and when the aquifer itself is separated from sources of contamination by similar materials, research and experience have demonstrated that 15 meters (50 feet) is an adequate distance separating the two. Lesser distances should be accepted, only after a comprehensive sanitary survey, conducted by qualified State or local health agency officials, has satisfied the officials that such lesser distances are both necessary and safe.

If it is proposed to install a properly constructed well in formations of unknown character, the State or U.S. Geological Survey and the State or local health agency should be consulted.

When wells must be constructed in consolidated formations, extra care should always be taken in the location of the well and in setting "safe" distances, since pollutants have been known to travel great distances in such formations. The owner should request assistance from the State or local health agency.

The following table is offered as a guide in determining distances:

Table 10. Distance of Well from Sources of Contamination	
Formation	**Minimum Acceptable Distance of Well from Sources of Contamination**
Favorable (Unconsolidated)	15 meters (50 feet) – Lesser distances only on health department approval following comprehensive sanitary survey of proposed site and immediate surroundings.
Unknown	15 meters (50 feet) – Only after comprehensive geological survey of the site and its surroundings has established, to the satisfaction of the health agency, that favorable formations do exist.
Poor (Consolidated)	Safe distances can be established only following both the comprehensive geological and comprehensive sanitary surveys. These surveys also permit determining the direction in which a well may be located with respect to sources of contamination. In no case should the acceptable distance be less than 15 meters (50 feet).

EVALUATING CONTAMINATION THREATS TO WELLS

Conditions unfavorable to the control of contamination and that may require specifying *greater* distances between a well and sources of contamination are:

1. **Nature of the Contaminant:** Human and animal excreta and toxic chemical wastes are serious health hazards. Salts, detergents and other substances that dissolve in water can mix with ground water and travel with it. They are not ordinarily removed by natural filtration.

2. **Deeper Disposal:** Cesspools, dry wells, disposal and waste injection wells and deep leaching pits that reach aquifers or reduce the amount of filtering earth materials between the wastes and the aquifer increase the danger of contamination.

3. **Limited Filtration:** When earth materials surrounding the well and overlying the aquifer are too coarse to provide effective filtration, as in limestone, coarse gravel, etc., or when they form a layer too thin, the risk of contamination is increased.

4. **The Aquifer:** When the materials of the aquifer itself are too coarse to provide good filtration, as in limestone, fractured rock, etc., contaminants entering the aquifer through outcrops or excavations may travel great distances. It is especially important in such cases to know the direction of ground water flow and whether there are outcrops of the formation (or excavations reaching it) "upstream" and close enough to be a threat.

5. **Volume of Waste Discharged:** Since greater volumes of wastes discharged and reaching an aquifer can significantly change the slope of the water table and the direction of ground water flow, it is obvious that heavier discharges can increase the threat of contamination.

6. **Contact Surface:** When pits and channels are designed and constructed to increase the rate of absorption, as in septic tank leaching systems, cesspools and leaching pits, more separation from the

water source will be needed than when tight sewer lines or waste pipes are used.

7. **Concentration of Contamination Sources:** The existence of more than one source of contamination, contributing to the general area, increases the total pollution load and, consequently, the danger of contamination.

SANITARY SURVEY

The importance of a sanitary survey of water sources cannot be overemphasized. With a new supply, the sanitary survey should be made in conjunction with the collection of initial engineering data, covering the development of a given source and its capacity to meet existing and future needs. The sanitary survey should include the detection of all health hazards and the assessment of their present and future importance. Persons trained and competent in public health engineering and the epidemiology of waterborne diseases should conduct the sanitary survey. In the case of an existing supply, the sanitary survey should be made at a frequency compatible with the control of the health hazards and the maintenance of a good sanitary quality.

The information furnished by the sanitary survey is essential to complete the interpretation of bacteriological and frequently the chemical data. This information should always accompany the laboratory findings. The following outline covers the essential factors which should be investigated or considered in a sanitary survey. Not all of the items are pertinent to any one supply and, in some cases, items not in the list would be important additions to the survey list.

Ground Water Supplies:

a. Character of local geology and slope of ground surface.

b. Nature of soil and underlying porous strata; whether clay, sand, gravel, rock (especially porous limestone); coarseness of sand or gravel; thickness of water-bearing stratum; depth to water table and location, log and construction details of local wells in use and abandoned.

c. Slope of water table, preferably determined from observational wells or as indicated, presumptively, but not certainly, by the slope of ground surface.

d. Extent of drainage area likely to contribute water to the supply.

e. Nature, distance and direction of local sources of pollution.

f. Possibility of surface-drainage water entering the supply and of wells becoming flooded and methods of protection.

g. Methods used for protecting the supply against pollution by means of sewage treatment, waste disposal and the like.

g. Well construction:

(1) Total depth of well.

(2) Casing: diameter, wall thickness, material and lengths from surface.

(3) Screen or perforations: diameter, material, construction, locations and lengths.

(4) Formation seal: material (cement, sand, bentonite, etc.), depth intervals, annular thickness and method of placement.

i. Protection of well at top: presence of sanitary well seal, casing height above ground floor or flood level, protection of well vent and protection of well from erosion and animals.

j. Pumphouse construction (floors, drains, etc.), capacity of pumps and draw down when pumps are in operation.

k. Availability of an unsafe supply, usable in place of normal supply, hence involving danger to the public health.

l. Disinfection: equipment, supervision, test kits or other types of laboratory control.

Surface Water Supplies:

a. Nature of surface geology: character of soils and rocks.

b. Character of vegetation, forests, cultivated and irrigated land, including salinity, effect on irrigation water, etc.

c. Population and sewered population per square mile of catchment area.

d. Methods of sewage disposal, whether by diversion from watershed or by treatment.

e. Character and efficiency of sewage-treatment works on watershed.

f. Proximity of sources of fecal pollution to intake of water supply.

g. Proximity, sources and character of industrial wastes, oil field brines, acid mine waters, etc.

h. Adequacy of supply as to quantity.

i. For lake or reservoir supplies: wind direction and velocity data, drift of pollution and sunshine data (algae).

j. Character and quality of raw water: coliform organisms (MPN), algae, turbidity, color and objectionable mineral constituents.

k. Nominal period of detention in reservoirs or storage basin.

l. Probable minimum time required for water to flow from sources of pollution to reservoir and through reservoir intake.

m. Shape of reservoir, with reference to possible currents of water, induced by wind or reservoir discharge, from inlet to water-supply intake.

n. Protective measures in connection with the use of watershed to control fishing, boating, landing of airplanes, swimming, wading, ice cutting and permitting animals on marginal shore areas and in or upon the water, etc.

o. Efficiency and constancy of policing.

p. Treatment of water: kind and adequacy of equipment; duplication of parts; effectiveness of treatment; adequacy of supervision and testing; contact period after disinfection and free chlorine residuals carried.

q. Pumping facilities: pumphouse, pump capacity and standby units and storage facilities.

II. CONSTRUCTION

SANITARY CONSTRUCTION OF WELLS

The penetration of a water-bearing formation by a well provides a direct route for possible contamination of the ground water. Although there are different types of wells and well construction, there are basic sanitary aspects that must be considered and followed.

1. The annular space outside the casing shall be filled with a watertight cement grout or puddled clay from a point just below the frost line or deepest level of excavation near the well to as deep as necessary to prevent entry of contaminated water.

2. For artesian aquifers, the casing shall be sealed into the overlying impermeable formations so as to retain the artesian pressure.

3. When a water-bearing formation containing water of poor quality is

penetrated, the formation shall be sealed off to prevent the infiltration of water into the well and aquifer.

4. A sanitary well seal, with an approved vent, shall be installed at the top of the well casing to prevent the entrance of contaminated water or other objectionable material.

Well Casing or Lining: All that part of the suction pipe or drop pipe of any well within 3 meters (10 feet) of and below the ground surface shall be surrounded by a watertight casing pipe extending above the ground, platform or floor surface, as the case maybe, and covered at the top as herein provided. The casing of every well shall terminate above the ground level; the annular space outside the casing shall be filled with a watertight cement grout or clay, with similar sealing properties, from the surface to a minimum of 3 meters (10 feet) below the ground surface. A dug well, in lieu of a casing pipe, may be provided with a substantial watertight lining of concrete, vitrified tile with outer concrete lining, or other suitable material. Such lining shall extend at least 3 meters (10 feet) below the surface and shall extend up to the well platform or pump room floor with a watertight connection. In such case, the platform or floor shall have a suitable sleeve pipe, surrounding the suction pipe or drop pipe, and projecting above as herein provided for a casing pipe.

Well Covers and Seals: Every well shall be provided with an overlapping, tight-fitting cover at the top of the casing or pipe sleeve to prevent contaminated water or other material from entering the well.

The sanitary well seal, in a well exposed to possible flooding, shall be either watertight or elevated at least .6 meters (2 feet) above the highest known flood level. When it is expected that a well seal may become flooded, it shall be watertight and equipped with a vent line, whose opening to the atmosphere, is at least .6 meters (2 feet) above the highest known flood level.

The seal in a well not exposed to possible flooding shall be either watertight (with an approved vent line) or self-draining, with an overlapping and downward flange. If the seal is of the self-draining (non-watertight) type, all openings in the cover should be either watertight or flanged upward and provided with overlapping, downward flanged covers.

Some pump and power units have closed bases that effectively seal the upper terminal of the well casing. When the unit is the open type, or when it is located at the side (some jet- and suction-pump-type installations), it is especially important that a sanitary well seal be used. There are several acceptable designs consisting of an expandable neoprene gasket, compressed between two steel plates. They are easily installed and removed for well servicing. Pump and water well suppliers normally stock sanitary well seals.

If the pump is not installed immediately after well drilling and placement of the casing, the top of the casing should be closed with a metal cap screwed or tack welded into place, or covered with a sanitary well seal.

For large-diameter wells such as dug wells, it would be difficult to provide a sanitary well seal, consequently, a reinforced concrete slab, overlapping the casing and sealed to it with a flexible seal and/or rubber gasket, should be installed. The annular space outside the casing should first be filed with suitable grouting or sealing materials, i.e., cement, clay, or fine sand.

A well slab alone is not an effective sanitary defense, since it can be undermined by burrowing animals and insects, cracked from settlement or frost heave or broken by vehicles and vibrating machinery. The

cement grout formation seal is far more effective. It is recognized; however, that there are situations that call for a concrete slab or floor around the well casing to facilitate cleaning and improve appearance. When such a floor is necessary, it shall be placed only after the formation seal and the pitless installation have been inspected.

Well covers and pump platforms shall be elevated above the adjacent finished ground level. Pump room floors shall be constructed of reinforced, watertight concrete and carefully leveled or sloped away from the well, so that surface and waste water cannot stand near the well. The minimum thickness of such a slab or floor shall be 10 centimeters (4 inches). Concrete slabs or floors shall be poured separately from the cement formation seal and when the threat of freezing exists, insulated from it and the well casing by a plastic or mastic coating or sleeve to prevent bonding of the concrete to either.

All water wells shall be readily accessible at the top for inspection, servicing and testing. This requires that any structure over the well be easily removable to provide full, unobstructed access for well servicing equipment. The so-called "buried seal," with the well cover buried under several meter (yards) of earth, is unacceptable because:

1. It discourages periodic inspection and preventive maintenance;
2. It makes severe contamination during pump servicing and well repair more likely;
3. Any well servicing is more expensive; and
4. Excavation to expose the top of the well increases the risk of damage to the well, the cover, the vent and the electrical connections.

Well Pits and Drainage: Because of the pollution hazards involved, the well head, well casing, pump, pumping machinery, valve connected with the suction pump or exposed suction pipe shall not be permitted in any pit, room or space extending below ground level, or in any room or space above the ground, which is walled-in or otherwise enclosed, so that it does not have free drainage by gravity to the surface of the ground. *Provided*, that a dug well properly constructed, lined and covered, as herein prescribed, shall not be construed to be a pit. *Provided further*, that pumping equipment and appurtenances may be located in a residential basement, which is not subject to flooding. *And provided further*, that in the case of existing water supplies which otherwise comply with the applicable requirements of this appendix, pit installations may be accepted, under the following conditions, when permitted by the State water-control authority:

1. Pits shall be of watertight construction, with walls extending at least 15 centimeters (6 inches) above the established ground surface at all points.
2. Pits shall be provided with a watertight, concrete floor, sloping to a drain which discharges to the ground surface at a lower elevation than the pit, and preferably at least 9 meters (30 feet) from it; or if this should be impossible, to a watertight, concrete sump, in the pit, equipped with a sump-pump discharging to the ground surface, preferably at least 9 meters (30 feet) from the pit.
3. Pits shall be provided with a concrete base for pumps or pumping machinery, so that such units shall be located at least 30 centimeters (12 inches) above the floor of the pit.
4. Pits shall be provided with a watertight housing or cover in all cases.
5. If inspection should reveal that these conditions are not being properly maintained, the supply shall be disapproved.

Manholes: Manholes may be provided on dug wells, reservoirs, tanks and other similar features of water supplies. A manhole, if installed, shall be provided with a curb, the top of which extends at least 10 centimeters (4 inches) above the slab and shall be equipped, where necessary for physical protection, with a locked or bolted overlapping watertight cover. The sides of which extend downward at least 5 centimeters (2 inches). The covers shall be kept closed at all times, except when it may be necessary to open the manhole.

Vent Opening: Any reservoir, well, tank or other structure containing water for the dairy water supply may be provided with vents, overflows, or water-level control gauges, which shall be so constructed as to prevent the entrance of birds, insects, dust, rodents or contaminating material of any kind. Openings on vents shall be not less than 46 centimeters (18 inches) above the floor of a pump room, or above the roof or cover of a reservoir. Vent openings on other structures shall be at least 46 cm (18 inches) above the surface on which the vents are located. Vent openings shall be turned down and screened with corrosion-resistant screen of not less than 16 x 20 mesh. Overflow outlets shall discharge above and not less than 6 inches from a roof, roof drain, floor, floor drain or over an open water-supplied fixture. The overflow outlet shall be covered by a corrosion-resistant screen of not less than 16 x 20 mesh and by .6 centimeters (1/4-inch) hardware cloth, or shall terminate in a horizontal angle seat check valve.

DEVELOPMENT OF SPRINGS

There are two general requirements necessary in the development of a spring, used as a source of domestic water.

1. Selection of a spring with adequate capacity to provide the required quantity and quality of water for its intended use throughout the year.
2. Protection of the sanitary quality of the spring. The measures taken to develop a spring must be tailored to its geological conditions and sources.

The features of a spring encasement are the following:

1. An open-bottom, watertight basin intercepting the source which extends to bedrock or a system of collection pipes and a storage tank;
2. A cover that prevents the entrance of surface drainage or debris into the storage tank;
3. Provisions for the cleanout and emptying of the tank contents;
4. Provision for overflow; and
5. A connection to the distribution system or auxiliary supply. (See Figure 12).

A tank is usually constructed in place with reinforced concrete, of such dimensions, as to enclose or intercept as much of the spring as possible. When a spring is located on a hillside, the downhill wall and sides are extended to bedrock or to a depth that will insure maintenance of an adequate water level in the tank. Supplementary cutoff walls, of concrete or impermeable clay, extending laterally from the tank may be used to assist in controlling the water table in the locality of the tank. The lower portion of the uphill wall of the tank can be constructed of stone, brick or

other material, so placed that water may move freely into the tank from the formation. Backfill of graded gravel and sand will aid in restricting movement of fine material from the formation toward the tank.

The tank cover shall be cast in place to insure a good fit. Forms should be designed to allow for shrinkage of concrete and expansion of form lumber. The cover shall extend down over the top edge of the tank at least 5 centimeters (2 inches). The tank cover shall be heavy enough so that it cannot be dislodged by children and shall be equipped for locking.

A drain pipe with an exterior valve shall be placed close to the wall of the tank near the bottom. The pipe shall extend horizontally so as to clear the normal ground level at the point of discharge by at least 15 centimeters (6 inches). The discharge end of the pipe shall be screened to prevent the entrance of rodents and insects.

The overflow is usually placed slightly below the maximum water-level elevation and screened. A drain apron of rock shall be provided to prevent soil erosion at the point of overflow discharge.

The supply outlet, from the developed spring, shall be located at least 15 cm (6 inches) above the drain outlet and properly screened. Care shall be taken in casting pipes into the walls of the tank to insure good bond with the concrete and freedom from honeycomb around the pipes.

SANITARY PROTECTION OF SPRINGS

Springs usually become contaminated when barnyards, sewers, septic tanks, cesspools or other sources of pollution are located on higher adjacent land. In limestone formations; however, contaminated material frequently enters the water-bearing channels through sink holes or other large openings and may be carried along with ground water for long distances. Similarly, if material from such sources of contamination finds access to the tubular channels in glacial drift, this water may retain its contamination for long periods of time and for long distances.

The following precautionary measures will help to insure developed spring water of consistently high quality:

1. Provide for the removal of surface drainage from the site. A surface drainage ditch shall be located uphill from the source so as to intercept surface-water runoff and carry it away from the source. Location of the ditch and the points at which the water should be discharged are a matter of judgement. Criteria used should include the topography, the subsurface geology, land ownership and land use.
2. Construct a fence to prevent entry of livestock. Its location should be guided by the considerations mentioned in item 1. The fence shall exclude livestock from the surface-water drainage system at all points uphill from the source.
3. Provide for access to the tank for maintenance, but prevent removal of the cover by a suitable locking device.
4. Monitor the quality of the spring water with periodic checks for contamination. A marked increase in turbidity or flow after a rainstorm is a good indication that surface runoff is reaching the spring.

SURFACE WATER

The selection and use of surface water sources, for individual water supply systems, require consideration of additional factors not usually associated with ground water sources. When small streams, open ponds, lakes or open reservoirs must be used as sources of water supply, the danger of contamination and the consequent spread of

enteric diseases, such as typhoid fever and dysentery is increased. As a rule, surface water shall be used only when ground water sources are not available or are inadequate. Clear water is not always safe, and the old saying that running water "purifies itself", to drinking water quality, within a stated distance is false.

The physical and bacteriological contamination of surface water makes it necessary to regard such sources of supply as unsafe for domestic use, unless reliable treatment, including filtration and disinfection, is provided.

The treatment of surface water to insure a constant, safe supply requires diligent attention to operation and maintenance by the owner of the system.

When ground water sources are limited, consideration shall be given to their development for domestic purposes only. Surface water sources can then provide water needed for stock and poultry watering, gardening, fire-fighting and similar purposes. Treatment of surface water used for livestock is not generally considered essential. There is; however, a trend to provide stock and poultry drinking water which is free from bacterial contamination and certain chemical elements.

Where resort must be made to surface water for all uses, a wide variety of sources, including farm ponds, lakes, streams and the roof runoff of buildings may be considered. These sources are regarded, without exception, to be contaminated, and their use cannot be condoned unless an individually tailored treatment process can be used, which will make them safe and satisfactory. Such treatment may include aeration and the use of suitable filtration or precipitation devices to remove suspended matter, in addition to routine full-time disinfection.

The milk producer or milk plant operator, who is considering surface sources of water for milking, milkhouse and milk plant operations shall receive the advance approval of the regulatory agency and shall comply with all applicable requirements of the State water control authority on the construction, protection and treatment of the chosen supply.

NOTE: The U. S. Environmental Protection Agency publishes a *Manual of Individual Water Supply Systems* which is an excellent source of detailed information on the development, construction and operation of individual water systems and also contains a suggested well-drilling code.

III. DISINFECTION OF WATER SOURCES

All newly constructed or newly repaired wells shall be disinfected to counteract contamination introduced during construction or repair. Every well shall be disinfected immediately after construction or repair and flushed prior to bacteriological testing.

An effective and economical method of disinfecting wells and appurtenances is the use of calcium hypochlorite, containing approximately 70 percent available chlorine. This chemical can be purchased in granular form at hardware stores, swimming pool equipment supply outlets or chemical supply houses.

When used in the disinfection of wells, calcium hypochlorite should be added in sufficient amounts to provide a dosage of approximately 50 mg. available chlorine per liter in the well water. This concentration is roughly equivalent to a mixture of 1 gram (.03 ounce) of dry chemical per 13.5 liter (3.56 gallons) of water to be disinfected. A stock solution of disinfectant may be prepared by mixing 30 grams (1 ounce) of high-test hypochlorite with 2 liters (2 quarts)

of water. Mixing is facilitated if a small amount of the water is first added to the granular calcium hypochlorite and stirred to a smooth watery paste free of lumps. The stock solution should be stirred thoroughly for 10 to 15 minutes. The inert ingredients should then be allowed to settle. The liquid containing the chlorine should be used and the inert material discarded. Each 1.9 liter (2 quarts) of stock solution will provide a concentration of approximately 50 mg/l when added to 378 liters (100 gallons) of water. The solution should be prepared in a clean utensil. The use of metal containers should be avoided, as they are corroded by strong chlorine solutions. Crockery, glass or rubberlined containers are recommended.

Where small quantities of disinfectant are required and a scale is not available, the material can be measured with a spoon. A heaping tablespoonful of granular calcium hypochlorite weighs approximately 14 grams (1/2 ounce).

When calcium hypochlorite is not available, other sources of available chlorine such as sodium hypochlorite (12-15 percent of volume) can be used. Sodium hypochlorite, which is also commonly available as liquid household bleach with 5.25 percent available chlorine, can be diluted with two parts of water to produce the stock solution. 1.9 liter (2 quarts) of this solution can be used for disinfecting 378 liters (100 gallons) of water.

Stock solutions of chlorine in any form will deteriorate rapidly unless properly stored. Dark glass or plastic bottles with airtight caps are recommended. Bottles containing solution should be kept in a cool place and protected from direct sunlight. If proper storage facilities are not available, the solution should always be prepared fresh, immediately before use.

Complete information concerning the test for residual chlorine is included in the latest edition of *Standard Methods for the Examination of Water and Wastewater*, published by the American Public Health Association.

DUG WELLS

After the casing or lining has been completed, follow the procedure outlined below:

1. Remove all equipment and materials which will not form a permanent part of the completed structure.
2. Using a stiff broom or brush, wash the interior walls of the casing or lining with a strong solution (100 mg/l of chlorine) to insure thorough cleaning and sanitizing.
3. Place the cover over the well and pour the required amount of chlorine solution into the well through the manhole or pipe opening just before inserting the pump cylinder and drop-pipe assembly. The chlorine solution should be distributed over as much of the surface of the water as possible to obtain proper diffusion of the chemical through the water hose or pipeline as the line is being alternately raised and lowered. This method should be followed whenever possible.
4. Wash the exterior surface of the pump cylinder and drop pipe, with the chlorine solution, as the assembly is being lowered into the well.
5. After the pump has been set in position, pump water from the well and through the entire water distribution system to the milkroom until a strong odor of chlorine is noted.
6. Allow the chlorine solution to remain in the well for at least 24 hours.
7. After 24 hours or more have lapsed, flush the well to remove all traces of chlorine.

DRILLED, DRIVEN, AND BORED WELLS

After the casing or lining has been completed, follow the procedure outlined below:

1. Remove all equipment and materials which will not form a permanent part of the completed structure.
2. When the well is being tested for yield, the test pump should be operated until the well water is clear and as free from turbidity as possible.
3. After the testing equipment has been removed, slowly pour the required amount of chlorine solution into the well just before installing the permanent pumping equipment. Diffusion of the chemical with the well water may be facilitated as previously described.
4. Wash the exterior surface of the pump cylinder and drop pipe with chlorine solution as the assembly is being lowered into the well.
5. After the pump has been set in position, operate the pump until water discharge through the entire distribution system to waste has a distinct odor of chlorine. Repeat this procedure a few times, at 1-hour intervals, to insure complete circulation of the chlorine solution through the column of water in the well and the pumping equipment.
6. Allow the chlorine solution to remain in the well for at least 24 hours.
7. After 24 hours or more have elapsed, flush the well to remove all traces of chlorine. The pump should be operated until water discharged to waste is free from the chlorine odor.

In the case of deep wells having a high water level, it may be necessary to resort to special methods of introducing the disinfecting agent into the well so as to insure proper diffusion of chlorine throughout the well. The following method is suggested.

Place the granulated calcium hypochlorite in a short section of pipe capped at both ends. A number of small holes should be drilled through each cap or into the sides of the pipe. One of the caps should be fitted with an eye to facilitate attachment of a suitable cable. The disinfecting agent is distributed when the pipe section is lowered and raised throughout the depth of the water.

WATER-BEARING STRATA

Sometimes a well is encountered that does not respond to the usual methods of disinfection. A well like this has usually been contaminated by water that entered under sufficient head to displace water into the water-bearing formation. The displaced water carries contamination with it. The contamination that has been carried into the water-bearing formation can be eliminated or reduced by forcing chlorine into the formation. Chlorine may be introduced in a number of ways, depending on the construction of the well. In some wells, it is advisable to chlorinate the water and then add a considerable volume of a chlorine solution in order to force the treated water into the formation. When this procedure is followed, all chlorinated water should have a chlorine strength of approximately 50 mg/l. In other wells, such as the drilled well cased with standard weight casing pipe, it is entirely practicable to chlorinate the water, cap the well and apply a head of air. When air is alternately applied and released, a vigorous surging effect is obtained and chlorinated water is forced into the water bearing formation. In this procedure, the chlorine strength of the treated water, in the well, will be reduced by dilution as it mixes with the water in the water-bearing

formation. It is; therefore, advisable to double or triple the quantity of chlorine compound to be used so as to have a chlorine strength of 100 to 150 mg/l in the well as the surging process is started. After treating a well in this manner, it is necessary to flush it to remove the excess chlorine.

DISINFECTION OF SPRINGS

Springs and encasements should be disinfected by a procedure similar to that used for dug well. If the water pressure is not sufficient to raise the water to the top of the encasement, it may be possible to shut off the flow and thus keep the disinfectant in the encasement for 24 hours. If the flow cannot be shut off entirely, arrangements should be made to supply disinfectant continuously for as long a period as practicable.

DISINFECTION OF WATER DISTRIBUTION SYSTEMS

These instructions cover the disinfection of water distribution systems and attendant standpipes or tanks. It is always necessary to disinfect a water system before placing it in use under the following conditions:

1. Disinfection of a system which has been in service with raw or polluted water, preparatory to transferring the service to treated water.
2. Disinfection of a new system upon completion and preparatory to placing in operation with treated water or water of satisfactory quality.
3. Disinfection of a system after completion of maintenance and repair operations.

The entire system, including tank or standpipe, should be thoroughly flushed with water to remove any sediment which may have collected during operation with raw water. Following flushing, the system should be filled with a disinfecting solution of calcium hypochlorite and treated water. This solution is prepared by adding 550 grams (1.2 pounds) of high-test 70 percent calcium hypochlorite to each 3,785 liters (1,000 gallons) of water. A mixture of this kind provides a solution having not less than 100 mg/1 of available chlorine.

The disinfectant should be retained in the system, tank or standpipe, if included, for not less than 24 hours, then examined for residual chlorine and drained out. If no residual chlorine is found present, the process should be repeated. The system is next flushed with treated water and put into operation.

IV. CONTINUOUS WATER DISINFECTION

Water supplies which are otherwise deemed satisfactory, but which prove unable to meet the bacteriological standards prescribed herein, shall be subjected to continuous disinfection. The individual character of the supply shall be investigated and a treatment program developed which shall produce a safe supply as determined by bacteriological testing.

For numerous reasons, including economy, effectiveness, stability, ease of use and availability, chlorine is by far the most popular chemical agent employed for the disinfection of water supplies. This does not preclude the use of other chemicals or procedures demonstrated to be safe and effective. The amount necessary to provide adequate protection varies with the supply and the amount of organic and other oxidizable material which it contains. Proper disinfection can only be assured when a residual concentration of chlorine remains, for bactericidal activity, after the demands of these other substances are met.

In general, these factors exert the most important influences on the bactericidal efficiency of chlorine:

1. Free chlorine residual; the higher the residual, the more effective the disinfection and the faster the disinfection rate.
2. Contact time between the organism and the disinfectant; the longer the time, the more effective the disinfection.
3. Temperature of the water in which contact is made; the lower the temperature, the less effective the disinfection.
4. The pH of the water in which contact is made; the higher the pH, the less effective disinfection.

For example, when a high pH and low temperature combination is encountered in a water, either the concentration of chlorine or the contact time must be increased. Likewise, chlorine residual will need to be increased if sufficient contact time is not available in the distribution system before the water reaches the first user.

SUPERCHLORINATION-- DECHLORINATION

Superchlorination: The technique of superchlorination involves the use of an excessive amount of chlorine to destroy quickly the harmful organisms which may be present in the water. If an excessive amount of chlorine is used, a free chlorine residual will be present. When the quantity of chlorine is increased, disinfection is faster and the amount of contact time required to insure safe water is decreased.

Dechlorination: The dechlorination process may be described as the partial or complete reduction of any chlorine present in the water. When dechlorination is provided in conjunction with proper superchlorination, the water will be both properly disinfected and acceptable to the consumer for domestic or culinary uses.

Dechlorination can be accomplished in individual water systems by the use of activated carbon (dechlorinating) filters. Chemical dechlorination by reducing agents such as sulphur dioxide or sodium thiosulfate can be used for batch dechlorination. Sodium thiosulfate is also used to dechlorinate water samples prior to submission for bacteriological examination.

DISINFECTION EQUIPMENT

Hypochlorinators are the most commonly employed equipment for the chemical elimination of bacteriological contamination. They operate by pumping or injecting a chlorine solution into the water. When properly maintained, hypochlorinators provide a reliable method for applying chlorine to disinfect water.

Types of hypochlorinators include positive displacement feeders, aspirator feeders, suction feeders and tablet hypochlorinators.

This equipment can be readily adapted to meet the needs of other systems of treatment, which require the regulated discharge of a solution into the supply.

Positive Displacement Feeders: A common type of positive displacement hypochlorinator is one which uses a piston or diaphragm pump to inject the solution. This type of equipment, which is adjustable during operation, can be designed to give reliable and accurate feed rates. When electricity is available, the stopping and starting of the hypochlorinator can be synchronized with the pumping unit. A hypochlorinator of this kind can be used with any water system. However, it is

especially desirable in systems where water pressure is low and fluctuating.

Aspirator Feeders: The aspirator feeder operates on a simple hydraulic principle that employs the use of the vacuum created when water flows either through a venturi tube or perpendicular to a nozzle. The vacuum created, draws the chlorine solution from a container into the chlorinator unit where it is mixed with water passing through the unit and the solution is then injected into the water system. In most cases, the water inlet line to the chlorinator is connected to receive water from the discharge side of the water pump, with the chlorine solution being injected back into the suction side of the same pump. The chlorinator operates only when the pump is operating. Solution flow rate is regulated by means of a control valve; pressure variations are known to cause changes in the feed rate.

Suction Feeders: One type of suction feeder consists of a single line that runs from the chlorine solution container, through the chlorinator unit and connects to the suction side of the pump. The chlorine solution is pulled from the container by suction created by the operating water pump.

Another type of suction feeder operates on the siphon principle, with the chlorine solution being introduced directly into the well. This type also consists of a single line, but the line terminates in the well below the water surface instead of the influent side of the water pump. When the pump is operating, the chlorinator is activated so that a valve is opened and the chlorine solution is passed into the well.

Tablet Chlorinator--These hypo-chlorinators inject water into a bed of concentrated calcium hypochlorite tablets. The result is metered into the pump suction line.

V. WATER RECLAIMED FROM THE CONDENSING OF MILK AND MILK PRODUCTS

Condensing water from milk evaporators and water reclaimed from milk and milk products may be reused in a milk processing plant. Acceptable uses of this water fall into three general categories:

1. Reclaimed water which may be used for all potable water purposes including the production of culinary steam.
2. Reclaimed water which may be used for limited purposes including the production of culinary steam.
3. Use of reclaimed water not meeting the requirements of this section.

Reclaimed water to be used for potable water purposes, including the production of culinary steam, shall meet the following requirements:

1. Water shall comply with the bacteriological standards of Appendix G, and, in addition, shall not exceed a total plate count of 500 per milliliter.
2. Samples shall be collected daily for two weeks following initial approval of the installation and semi-annually thereafter. *Provided*, that daily tests shall be conducted for one week following any repairs or alteration to the system.
3. The organic content shall be less than 12 mg/l as measured by the chemical oxygen demand or permanganate-consumed test; or a standard turbidity of less than 5 units.
4. Automatic fail safe monitoring devices shall be used to monitor and automatically divert (to the sewer) any water which exceeds the standard.
5. The water shall be of satisfactory organoleptic quality and shall

have no off-flavors, odors or slime formations.

6. The water shall be sampled and tested organoleptically at weekly intervals.

7. Approved chemicals, such as chlorine, with a suitable detention period, may be used to suppress the development of bacterial growth and prevent the development of tastes and odors.

8. The addition of chemicals shall be by an automatic proportioning device, prior to the water entering the storage tank, to assure satisfactory quality water in the storage tank at all times.

9. When chemicals are added, a daily testing program for such added chemicals shall be in effect and such chemicals shall not add substances that will prove deleterious to the use of the water or contribute to product contamination.

10. The storage vessel shall be properly constructed of such material that it will not contaminate the water and can be satisfactorily cleaned.

11. The distribution system, within a plant, for such reclaimed water shall be a separate system with no cross-connections to a municipal or private water system.

12. All physical, chemical and microbiological tests shall be conducted in accordance with the latest edition of *Standard Methods for the Examination of Water and Wastewater.*

Reclaimed water may be used for limited purposes including:

1. Production of culinary steam.

2. Pre-rinsing of the product surfaces where pre-rinses will not be used in food products.

3. Cleaning solution make-up water. Provided that for these uses items #3-11 of this section are satisfied and:

a. There is no carry-over of water from one day to the next, and any water collected is used promptly; or

The temperature of all water in the storage and distribution system is maintained at 63°C (145°F) or higher by automatic means; or

The water is treated with a suitable, approved chemical to suppress bacterial propagation by means of an automatic proportioning device, prior to the water entering the storage tank; and that,

b. Distribution lines and hose stations are clearly identified as "limited use reclaimed water"; and

c. Water handling practices and guidelines are clearly described and prominently displayed at appropriate locations within the plant; and

d. These water lines are not permanently connected to product vessels, without a break to the atmosphere and sufficient automatic controls, to prevent the inadvertent addition of this water to product streams.

Recovered water not meeting the requirements of this section may be used as boiler feedwater for boilers, not used for generating culinary steam, or in a thick, double walled, enclosed heat exchanger.

VI. WATER RECLAIMED FROM HEAT EXCHANGER PROCESSES

Potable water utilized for heat exchange purposes in plate or other type heat exchangers or compressors on Grade “A” dairy farms may be salvaged for the milking operation if the following criteria are met:

1. The water shall be stored in a storage vessel properly constructed of such material that it will not contaminate the water and be designed to protect the water supply from possible contamination.

2. The storage vessel shall be equipped with a drain and access point to allow for cleaning.

3. No cross-connection shall exist between this supply and any unsafe or questionable water supply or any other source of pollution.

4. There are no submerged inlets through which this supply may be contaminated.

5. The water shall be of satisfactory organoleptic quality and shall have no off flavors or odors.

6. The water shall comply with the bacteriological standards of Appendix G.

7. Samples shall be collected and analyzed prior to initial approval and semi-annually thereafter.

8. Approved chemicals, such as chlorine, with a suitable retention period, may be used to suppress the development of bacterial growth and prevent the development of tastes and odors.

9. When chemicals are added, a monitoring program for such added chemicals shall be in effect and such chemicals shall not add substances that will prove deleterious to the use of the water or contribute to product contamination.

10. If the water is to be used for the sanitizing of teats or equipment (backflush systems), approved sanitizers, such as iodine may be added by an automatic proportioning device located downstream from the storage vessel but prior to its end-use application.

NOTE:--The following figures 8-23 are taken from *The Manual of Individual Water Supply Systems*, Environmental Protection Agency publication number EPA-430-9-73-003.

VII. DRAWINGS OF CONSTRUCTION DETAILS FOR WATER SOURCES

Following are drawings showing the details of several types of water sources:

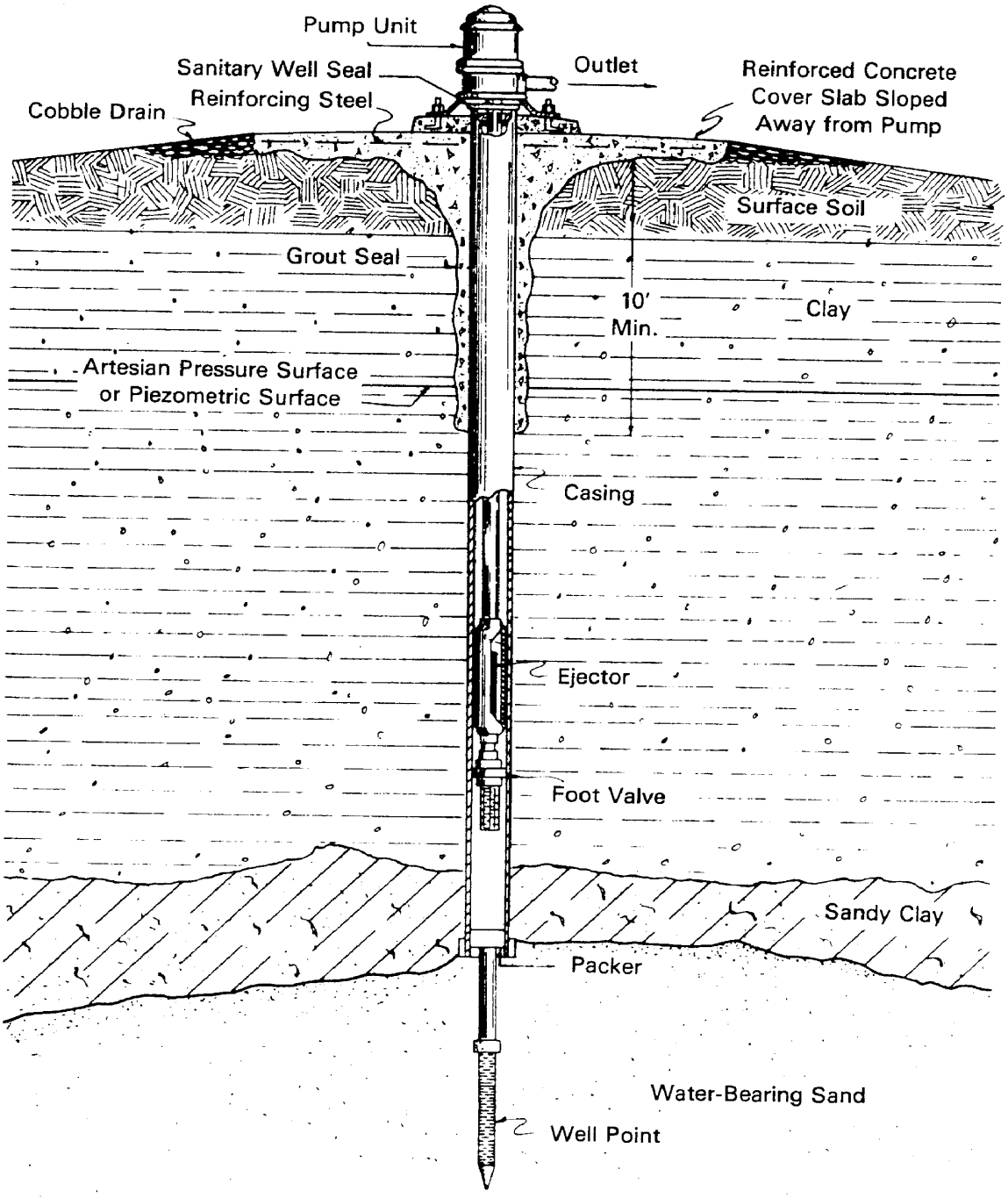

Figure 8. Bored Well with Driven Well Point

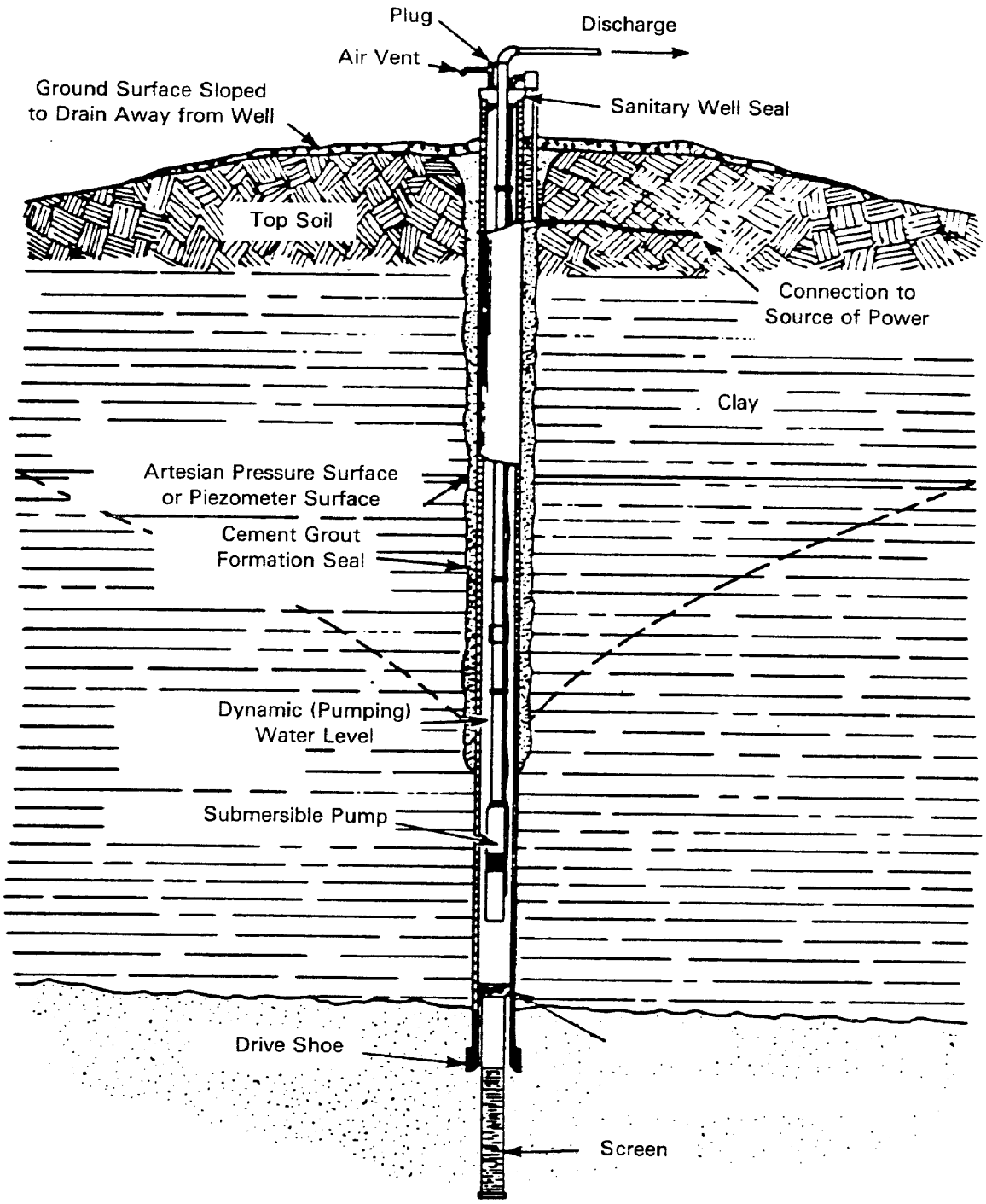

Figure 9. Drilled Well with Submersible Pump

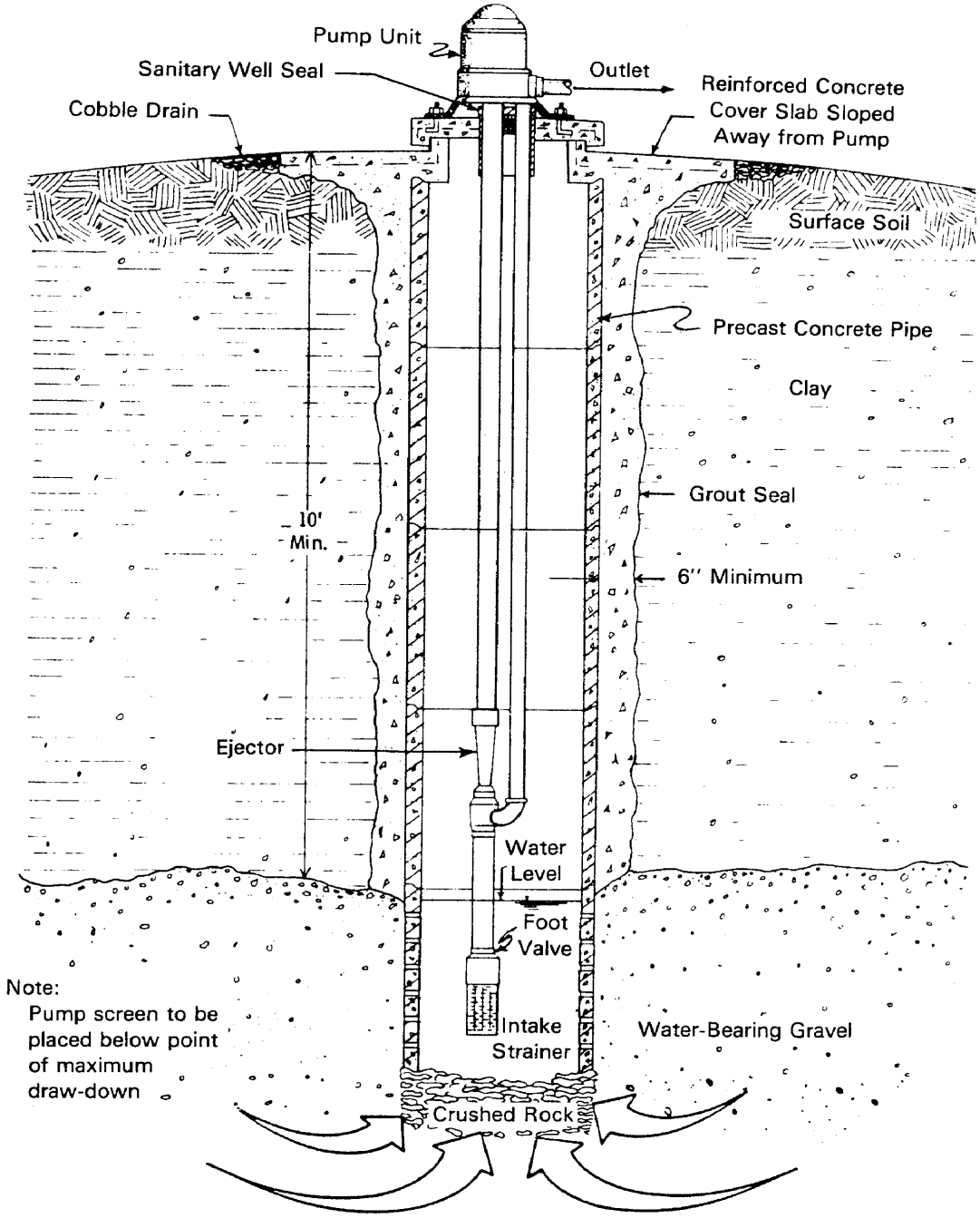

Figure 10. Dug Well with Two-Pipe Jet Pump Installation

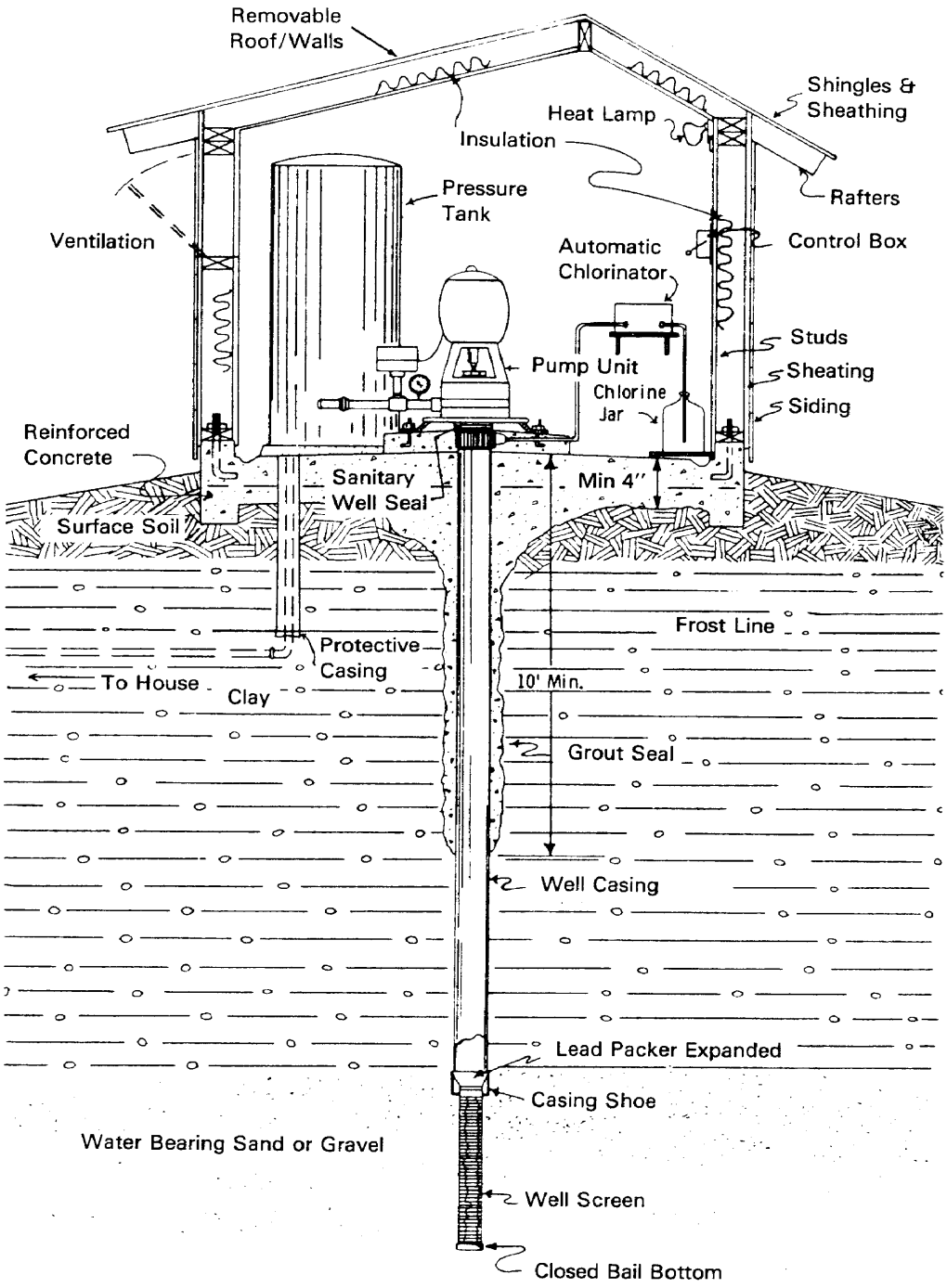

Figure 11. Pumphouse

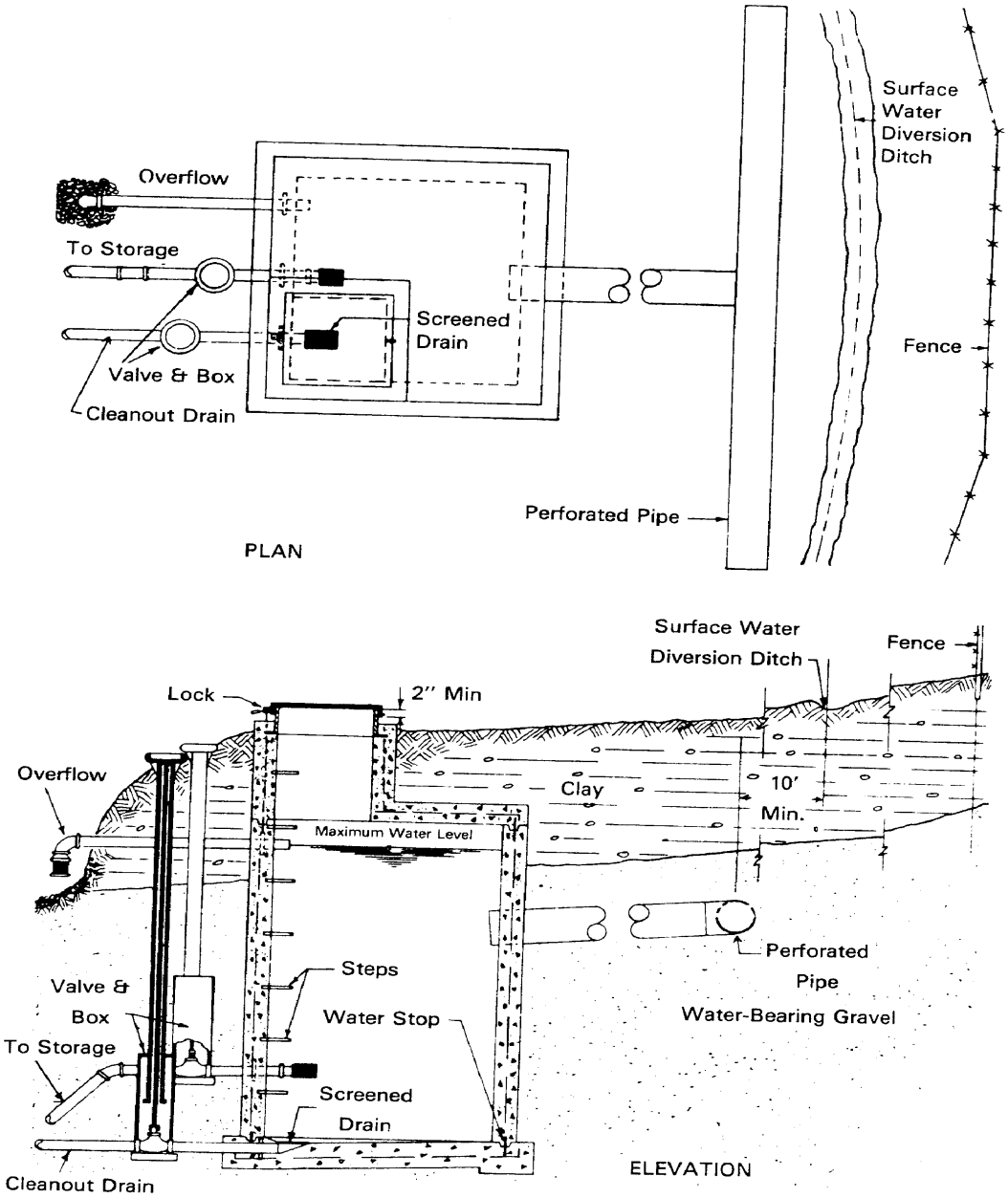

Figure 12. Spring Protection

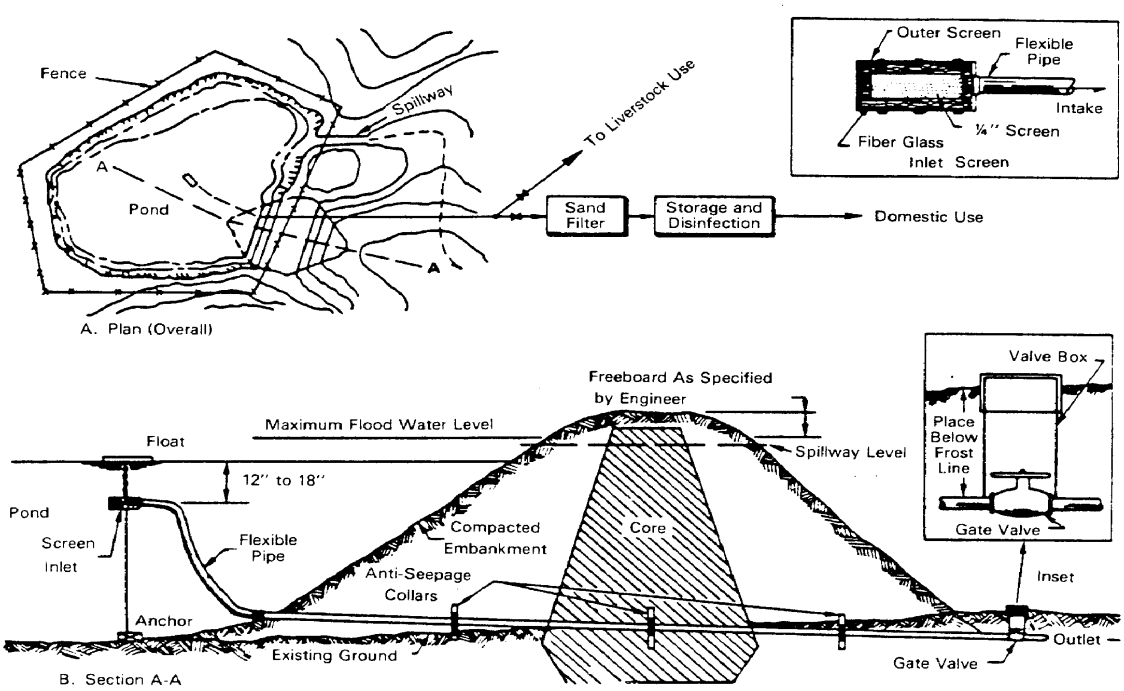

Figure 13. Pond

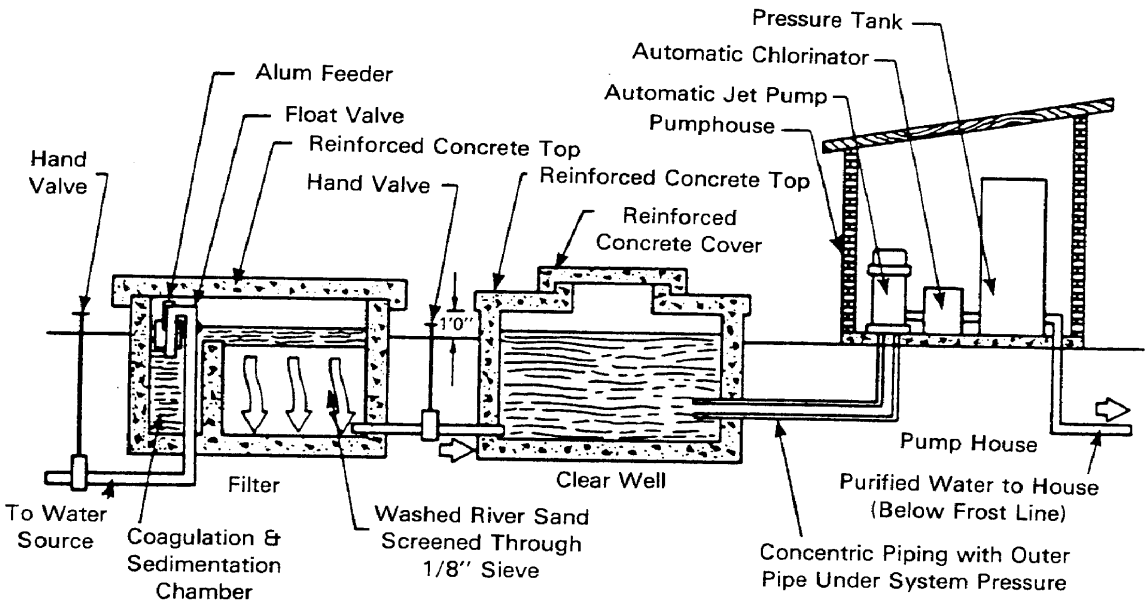

Figure 14. Schematic Diagram of a Pond Water-Treatment System

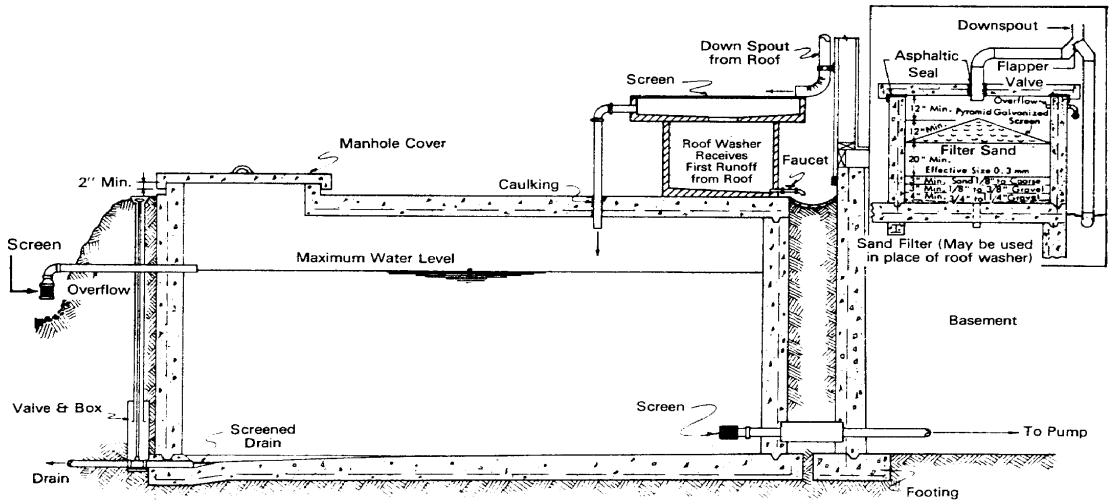

Figure 15. Cistern

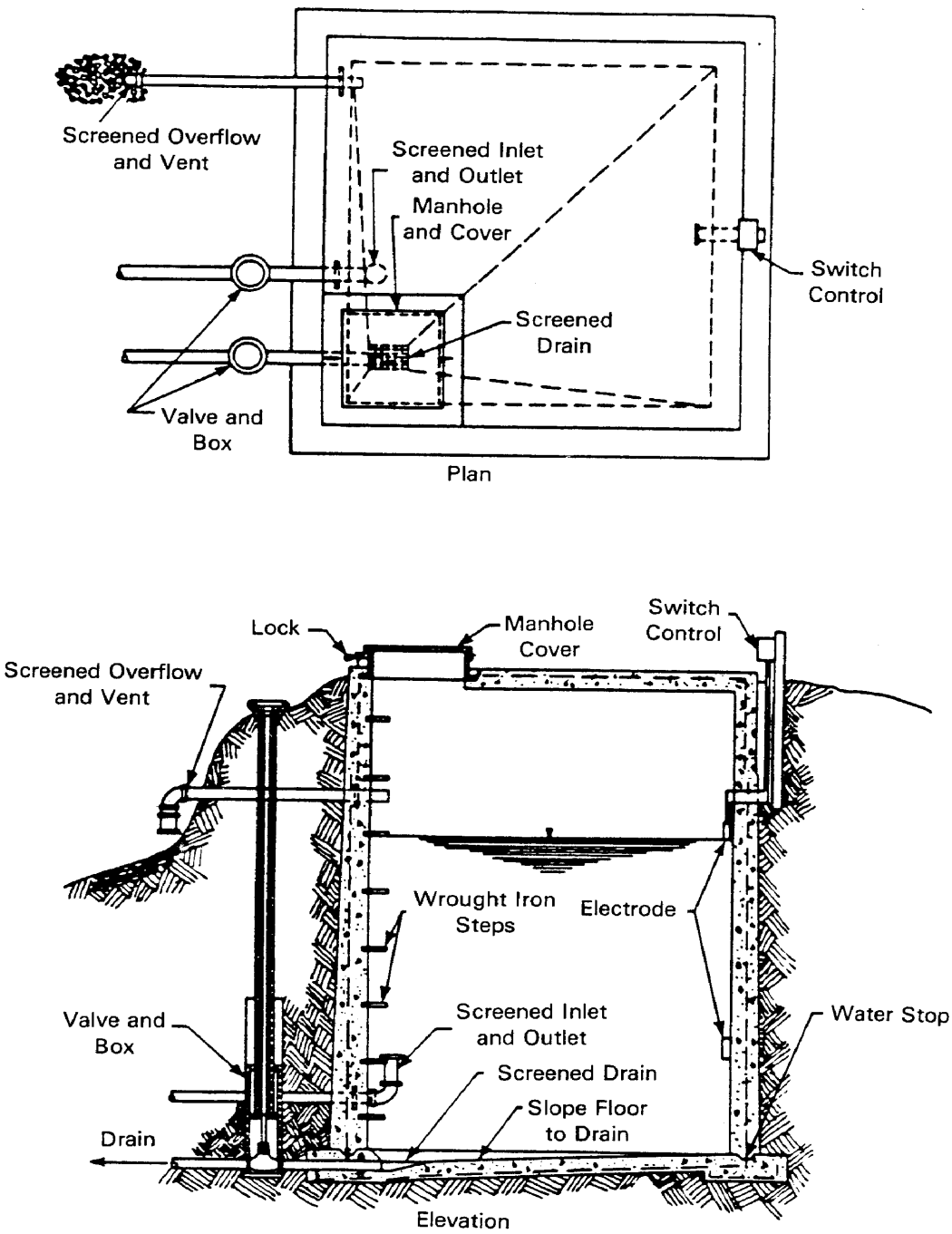

Figure 16. Typical Concrete Reservoir

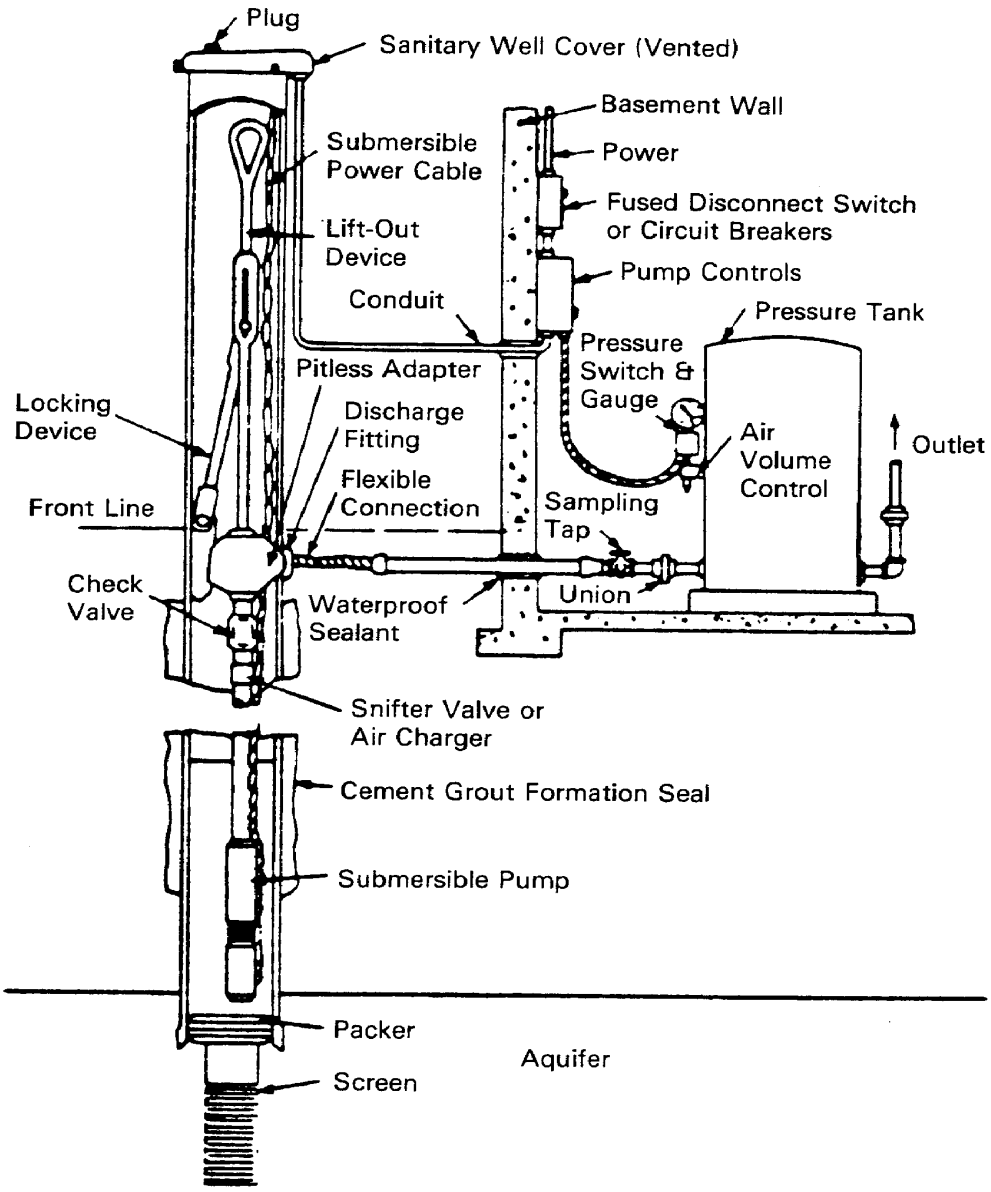

Figure 17. Pitless Adapter with Submersible Pump Installation for Basement Storage

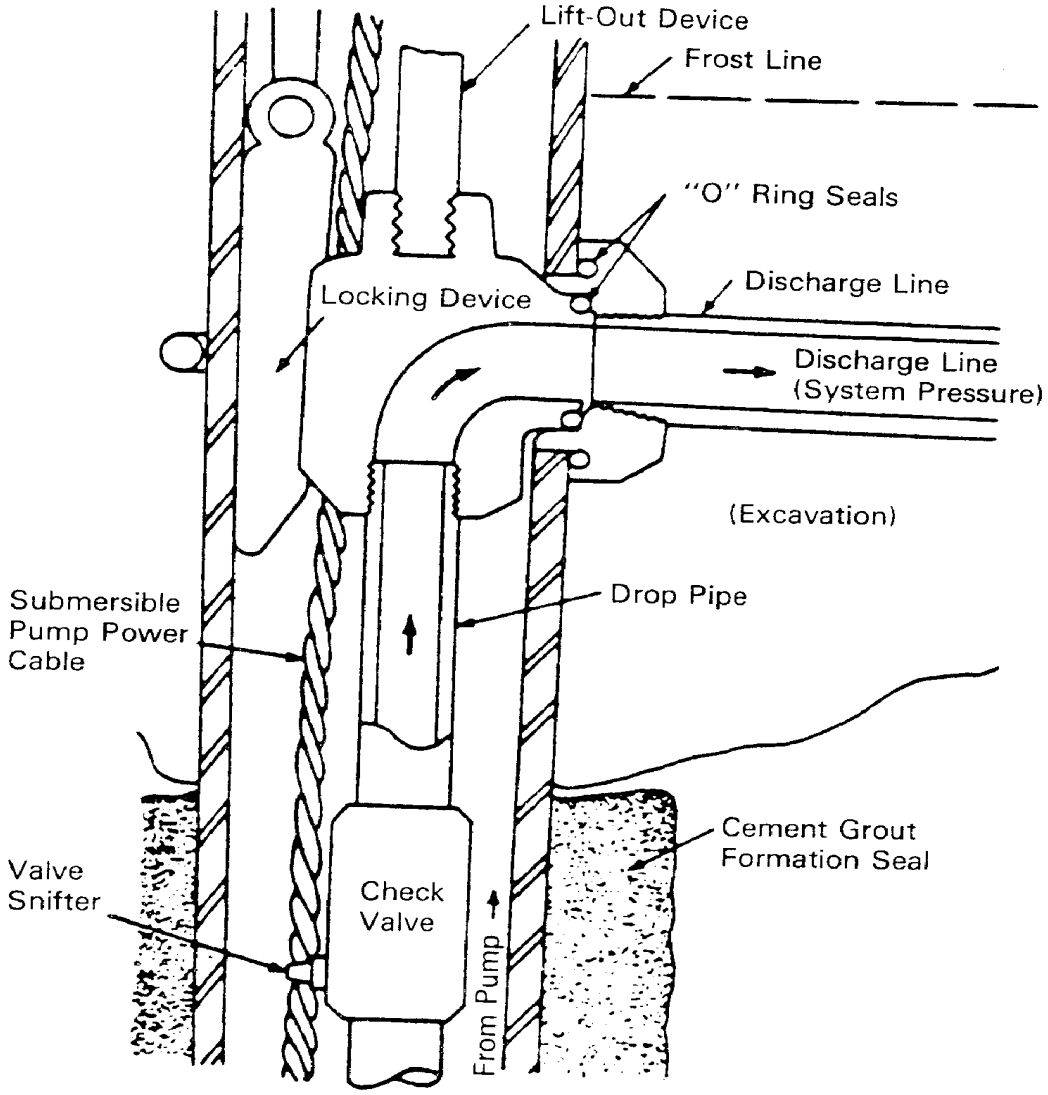

Figure 18. Clamp-on Pitless Adapter with Concentric External Piping for "Shallow Well" Pump Installation

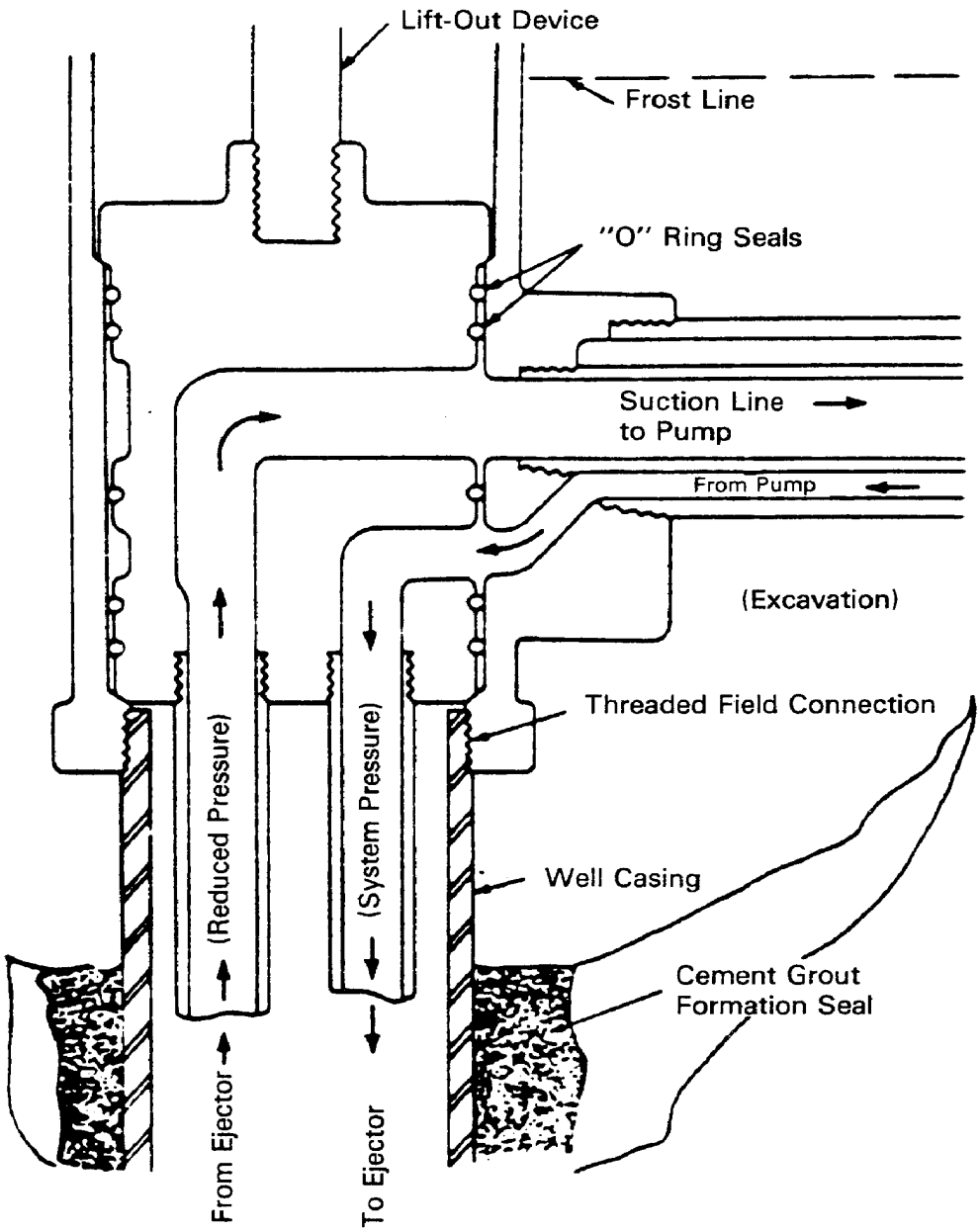

Figure 19. Pitless Unit with Concentric External Piping for Jet Pump Installation

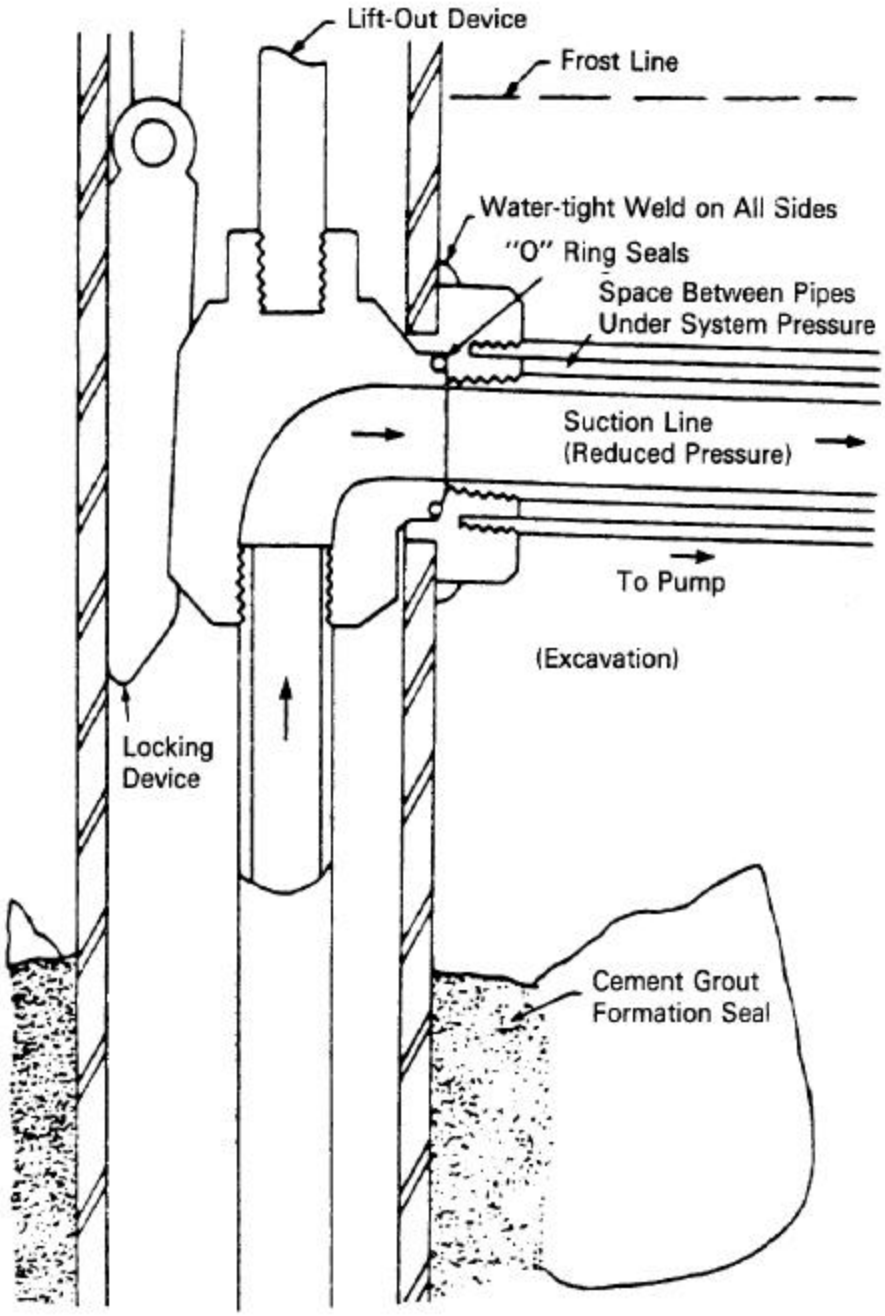

Figure 20. Weld-on Pitless Adapter with Concentric External Piping for "Shallow Well" Pump Installation

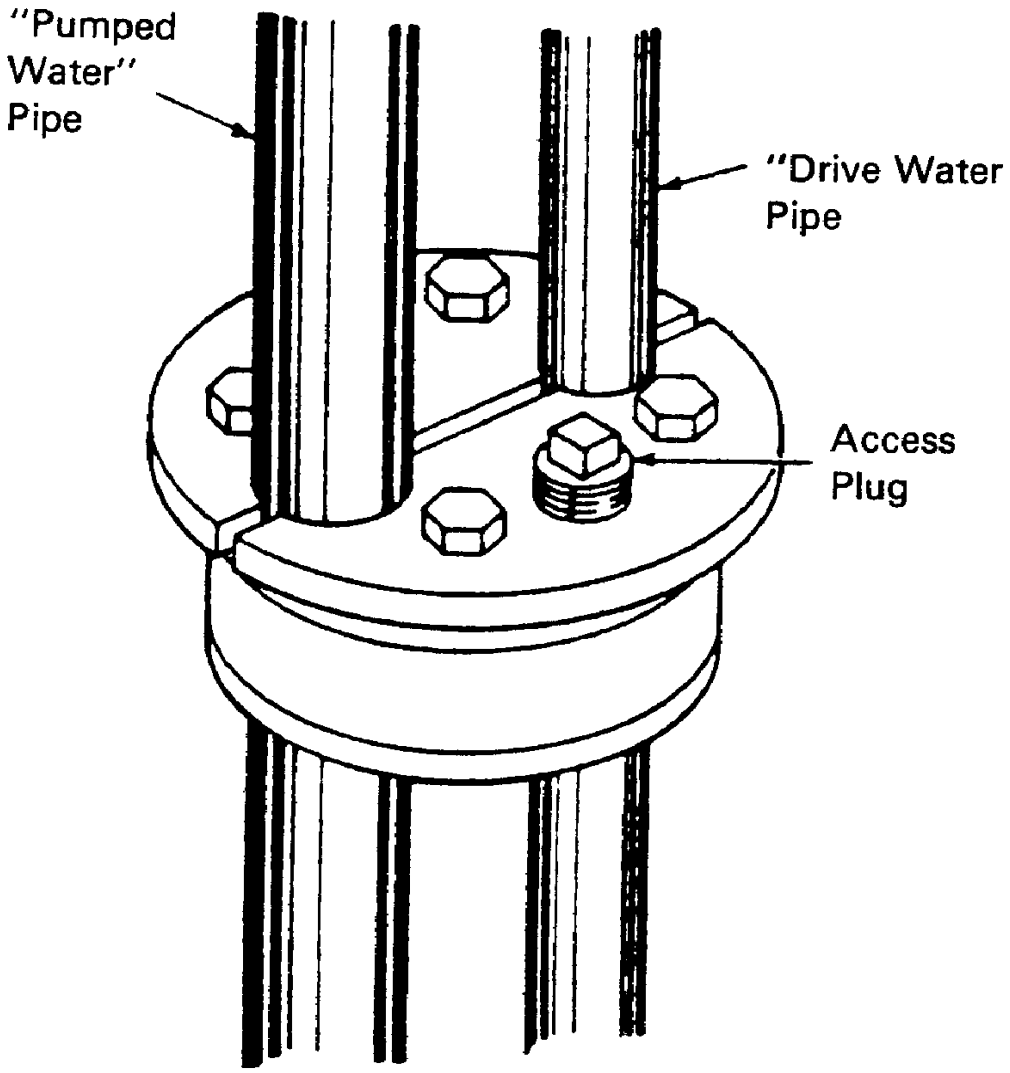

Figure 21. Well Seal for Jet Pump Installation

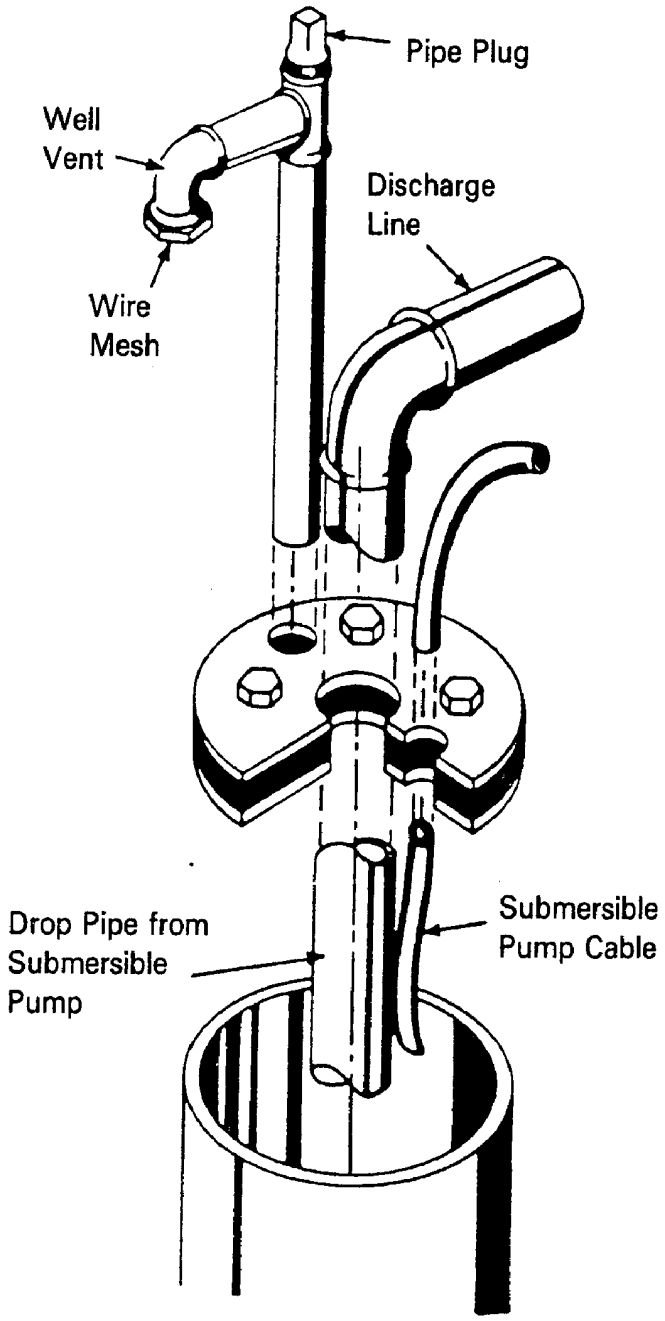

Figure 22. Well Seal for Submersible Pump Installation

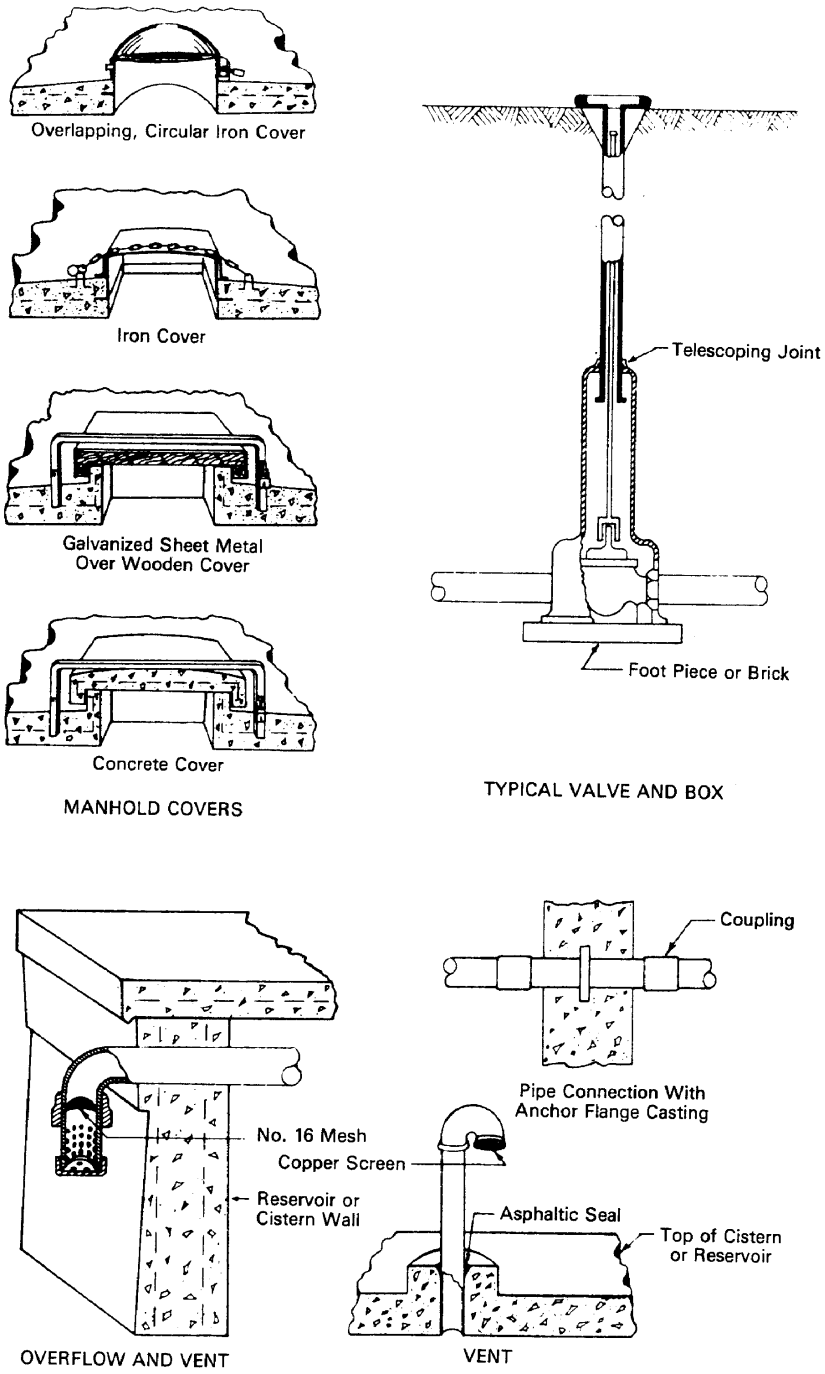

Figure 23. Typical Valve and Box, Manhole Covers, and Piping Installation

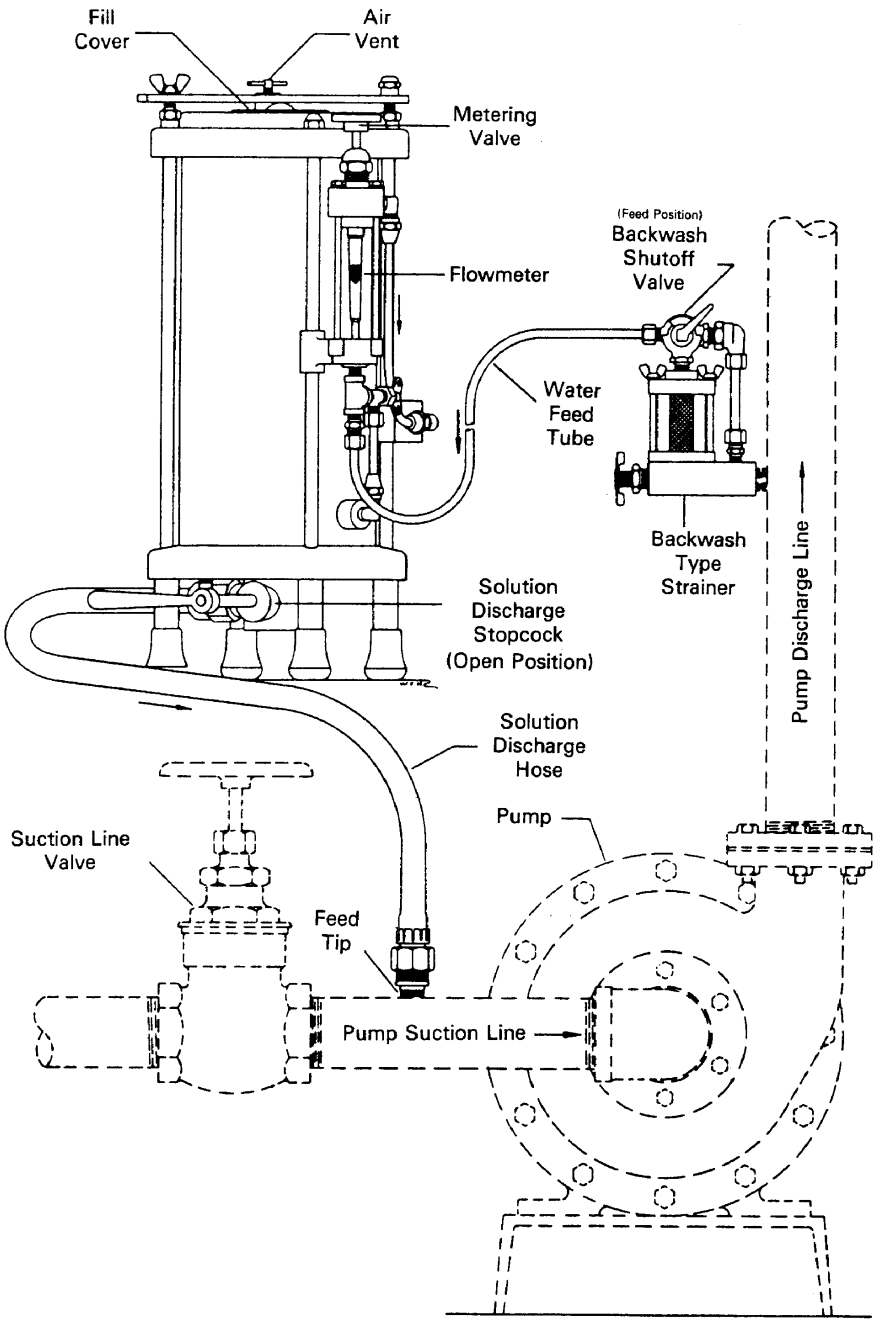

Figure 24. Suction Feeder

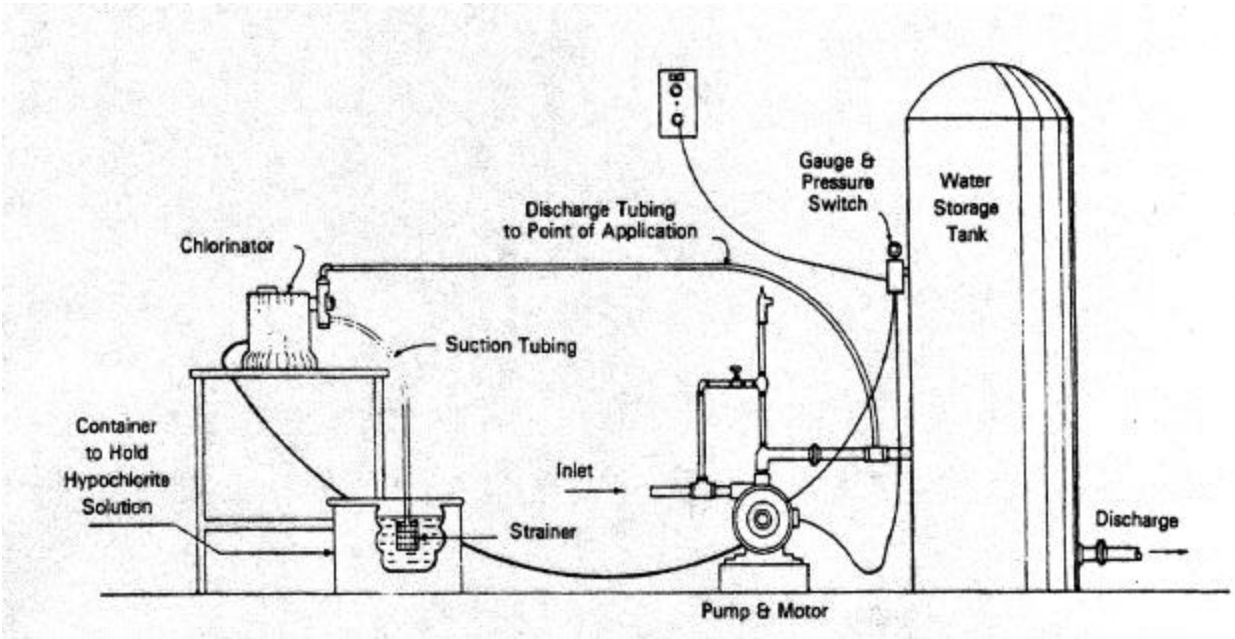

Figure 25. Positive Displacement Chlorinator

APPENDIX E. EXAMPLES OF 3-OUT-OF-5 COMPLIANCE ENFORCEMENT PROCEDURES

The following tables provide several useful examples in the application of the enforcement system described in Section 6. While the illustrations given, relate only to pasteurized milk bacterial counts and somatic cell counts of raw milk, the method is applied, in like fashion, to the enforcement of established standards for cooling temperature, coliform limits, etc. Pasteurized milk which shows a positive phosphatase reaction and milk in which the presence of drug residue, pesticides and other adulterants is found, shall be dealt with as indicated in Sections 6 and 2, respectively.

Table 11. Example of 3-out-of-5 Compliance Enforcement Procedures for Pasteurized Milk

Date	Bacterial count per ml.	Enforcement action as applied to a standard of 20,000/ml.
1/05/99	6,000	No action required
1/28/99	11,000	No action required
2/11/99	12,000	No action required
3/15/99	22,000	No action required
3/25/99	23,000	Written notice to plant, 2 of last 4 counts exceed the standard. (This notice shall be in effect as long as 2 of the last 4 consecutive samples exceed the standard). Additional sample required within 21 days.
4/02/99	9,000	No action required
4/19/99	51,000	Suspend permit or required withdrawal of product in violation, since 3 of last 5 counts exceed required standard.
4/23/99		Issue temporary permit after plant inspection. Begin accelerated sampling schedule.
4/25/99	11,000	Resume sampling; no action required
4/29/99	3,000	No action required
5/4/99	22,000	No action required
5/9/99	5,000	Permit fully reinstated

Table 12. Example of 3-out-of-5 Compliance Enforcement Procedures for Raw Milk Abnormal Milk Tests

Date	Confirmed Somatic Cell Counts per ml.	Enforcement action as applied to a standard of 750,000 per ml.
7/10/01	500,000	No action required
8/15/01	600,000	No action required
10/1/01	800,000	Violative; No action required
11/7/01	900,000	Violative; Written notice to producer, 2 of last 4 counts exceed standard
11/14/01	1,200,000	Violative; Suspend permit. Issue temporary permit after sampling indicates the milk supply is within the limits prescribed in Section 7; Begin accelerated sampling schedule.
11/28/01	700,000	Issue temporary permit
12/7/01	700,000	No action required
12/11/01	550,000	Permit fully reinstated

APPENDIX F. SANITIZATION

METHODS OF SANITIZATION

CHEMICAL

Certain chemical compounds are effective for the sanitization of milk utensils, containers and equipment. These are contained in 21 CFR 178.1010 and shall be used in accordance with label directions.

STEAM

When steam is used, each group of assembled piping shall be treated separately by inserting the steam hose into the inlet and maintaining steam flow from the outlet for at least 5 minutes after the temperature of the drainage at the outlet has reached 94°C (200°F). (The period of exposure required here is longer than that required for individual cans, because of the heat lost through the large surface exposed to the air.) Covers must be in place during treatment.

HOT WATER

Hot water may be used by pumping it through the inlet, if the temperature at the outlet end of the assembly is maintained to at least 77°C (170°F) for at least 5 minutes.

APPENDIX G. CHEMICAL AND BACTERIOLOGICAL TESTS

I. PRIVATE WATER SUPPLIES AND RECIRCULATED WATER--BACTERIOLOGICAL.

Reference: Items 8r, 19r, 7p and 17p.

Application: To private water supplies, used by dairy farms, milk plants, receiving stations, transfer stations and wash stations, and to recirculated cooling water, used in milk plants and dairy farms.

Frequency: Initially, and after repair, modification or disinfection of the private water supplies of dairy farms, milk plants, receiving/transfer stations and wash stations, and thereafter; semiannually for all milk plant, receiving/transfer stations and wash stations water supplies and at least every 3 years on dairy farms. Recirculated cooling water in milk plants and dairy farms shall be tested semiannually.

Criteria: A MPN (Most Probable Number of coliform organisms) of less than 1.1 per 100 ml, when ten replicate tubes containing 10 ml, or when five replicate tubes containing 20 ml, are tested using the multiple tube fermentation technique, or less than 1 per 100 ml by the membrane filter technique, or less than 1.1 per 100 ml when using an mmo-mug technique. (The MMO-MUG technique is not acceptable for recirculated cooling water). 100 ± 2.5 ml water will be used for this analysis. Any sample producing a bacteriological result of TNTC—Too Numerous To Count—(greater than 200 total bacteriological colonies per 100 ml by the membrane filter technique) or confluent growth by the multiple tube fermentation (Most Probable Number – MPN technique, without coliform present, shall have a subsequent heterotrophic plate count of less that 500 colonies per ml in order to be deemed satisfactory. Findings shall be reported as present or less than 1 per 100 ml (absent) for coliform organisms.

Apparatus, Method, and Procedure: Tests performed shall conform with the current edition of *Standard Methods for the Examination of Water and Wastewater* or with FDA approved, EPA promulgated methods for the examination of water and waste water.

Corrective Action: When the laboratory report on the sample is unsatisfactory, the water supply in question shall again be physically inspected and necessary corrections made until subsequent samples are bacteriologically satisfactory.

II. PASTEURIZATION EFFICIENCY-FIELD PHOSPHATASE TEST

Reference: Section 6.

Frequency: When any laboratory phosphatase test is positive, or any doubt arises as to the adequacy of pasteurization due to noncompliance with equipment, or standards of Item 16p.

Criteria: Less than 1 microgram per milliliter by Scharer Rapid Method (or equivalent by other means). See *Standard Methods for the Examination of Dairy Products.*

Apparatus: Field phosphatase test kit (obtainable from Applied Research Institute, 40 Brighton Ave., Perth Amboy, NJ 08861), standards, extra test tubes, stoppers or other approved phosphatase equipment.

Methods: The test is based on the detection of the phosphatase enzyme, a constituent that is inactivated by pasteurization at 63° C (145° F) for 30 minutes or 72° C (161° F) for 15 seconds. When pasteurization is faulty, some phosphatase remains and is detected through its action on phosphoricphenyl esters, releasing phenol, which is measured quantitatively by the addition of dibromo-or dichloroquinonechlorimide to form an indophenol blue color.

Procedure: See *Standard Methods for the Examination of Dairy Products* for details on phosphatase tests.

Corrective Action: Whenever a phosphatase test is positive, the cause shall be determined. Where the cause is improper pasteurization, it shall be corrected and any milk or milk products involved shall not be offered for sale.

III. PHOSPHATASE REACTIVATION IN HTST PASTEURIZED PRODUCTS

The presence of an appreciable quantity of phosphatase in milk and cream after heat treatment has been traditionally regarded as evidence of inadequate pasteurization. However, with the advent of modern high-temperature, short-time (HTST) methods, evidence has been accumulating that under certain conditions, the relationship between inadequate pasteurization and the presence of phosphatase does not hold.

A number of investigators who have studied HTST pasteurizing methods have concluded that while a negative test can be obtained immediately after pasteurization, the same sample may yield a positive test after a short period of storage, particularly if the product is not continuously or adequately refrigerated.

This phenomenon has come to be known as reactivation.

Reactivation may occur in HTST pasteurized products, after storage, at temperatures as low as 10° C (50° F), although 34° C (93° F) is optimum. Products of high fat content generally produce relatively more reactivable phosphatase.

Reactivation is greatest in products pasteurized at about 110° C (230° F) but may occur in products pasteurized at much higher temperatures and as low as 73° C (163° F).

It has been noted that an increase in holding time during pasteurization will reduce reactivation.

The addition of magnesium chloride to HTST processed milk or cream, after pasteurization but before storage, accelerates reactivation. The difference in activity between an adequately pasteurized sample, stored with and without magnesium, and an inadequately pasteurized sample, stored with and without magnesium, forms the basis of a test for differentiating reactivated from residual (inadequately pasteurized) phosphatase.

IV. DETECTION OF PESTICIDES IN MILK

Any regulatory agency which has adopted this *Ordinance* should operate under a control program which will insure that milk supplies are free from pesticide contamination, in conformance with Section 2.

Pesticide compounds gain access to milk by various routes. Insecticide contamination may result from any of the following:

1. Application to the lactating animals;

2. Inhalation of toxic vapors, by the animals, following application of insecticides to their environment;

3. Ingestion of residues in feed and water; and

4. Accidental contamination of milk, feed and utensils. Herbicide contamination may result from residues on the lactating animals feed and in their water supply and/or rodenticides may be present in milk as a result of accidental contamination.

At the present time, chlorinated hydrocarbon pesticides are the chief concern. While there are other pest control compounds which are more toxic than the chlorinated hydrocarbons, many of the agents in this latter group tend to accumulate in the body fat of both lactating animals and human beings, and are secreted in the milk of contaminated lactating animals. The accumulation of these toxic agents in persons continually consuming contaminated milk may reach hazardous concentrations.

Recent advances in residue analysis have resulted in a radical decrease in the use of paper chromatographic screening procedures for milk, because of its rather limited sensitivity. Regulatory agencies can now routinely detect residues as low as 0.01 ppm of many of the chlorinated organic pesticides. Satisfactory screening procedures should, therefore, attain this level of sensitivity which usually necessitates the use of gas chromatography or thin layer chromatography.

General screening procedures of the latter two types are described and discussed in Volume 1 of the *Pesticide Analytical Manual* published by the Food and Drug Administration.

The need for closer scrutiny of milk supplies for pesticide residues has stimulated considerable research in detection technology. The regulatory agency entering upon a surveillance program should carefully check the available equipment in relation to its adaptability to the indicated need.

While a schedule of testing comparable to that for microorganisms (four tests of individual producers milk during any consecutive 6 months) would be desirable, broad spectrum procedures are too time consuming to render such a schedule feasible. As a more practical approach, the following procedure is suggested:

1. Test one load of milk from each tank truck route, every 6 months, by a broad spectrum method and trace positive samples; or

2. Test each producer's milk four times every 6 months for the most common chlorinated hydrocarbon pesticides, by available instrumental methodology.

NOTE: The above testing disciplines may be applied conveniently to can milk supplies. Where plan 1. is used, samples of commingled milk from known sources are drawn from receiving station storage tanks. Sampling for plan 2. may be done directly from the weigh tank.

V. DETECTION OF DRUG RESIDUES IN MILK

The problem of drug residues in milk is associated with their use in the treatment of mastitis and other diseases. Failure to withhold milk from the market for a sufficient length of time after treatment may result in the presence of drug residues in milk. Such milk is undesirable for two reasons; first, it comes from an unhealthy lactating animal, and second, it is adulterated.

The allergenic properties of certain drugs in common use make their presence in milk potentially hazardous to consumers. Also, substantial losses of byproducts may be sustained by the milk industry each year

because of the inhibitory effects of drug residues on the culturing process. Drug residues should be tested for using tests provided in Section 6. These tests are specified in informational memoranda from the FDA. (See M-a-85, M-a-86, and the 2400 form for each specific test method.)

Note: *Bacillus stearothermopilus* disk assay analysis performed to fulfill the provisions of Section 7 of the PMO must be capable of detecting at least 4 of 6 beta lactam drugs at or below FDA reference levels. A zone equal to or greater than 16mm will be considered positive when the *Bacillus stearothermophilus* disk assay is used. See the most recent FDA 2400 procedure form(s) for details related to this analysis.

VI. ANALYSIS OF MILK AND MILK PRODUCTS FOR VITAMIN A AND D_3 CONTENT

Reference.—Section 6.

Frequency.—Annually for each product type, or when any doubt arises as to the adequacy of vitamin fortification (see Appendix O).

Methods.—Vitamin testing shall be performed using test methods acceptable to the FDA and other official methodologies which give statistically equivalent results to the FDA methods.

References

Campbell, J.E. and McFarren, E.F., *Collaborative Test for Reactivated and Residual Phosphatase in Dairy Products.* Journal of the Association of Official Agricultural Chemists, 44:3 August 1961.

Schafer, M.L., Bush, K.A. and Campbell, J.E., *Rapid Screening Method for DDT in Milk With Gas Chromatography*, Journal of Dairy Science, 43:1025(1963).

Official Methods of Analysis of the Association of Official Analytical Chemists, 12th ed., 1975.

Pesticide Analytical Manual of the Food and Drug Administration, available from the Association of Official Analytical Chemists, Box 540, Benjamin Franklin Station, Washington, DC 20044.

APPENDIX H. PASTEURIZATION EQUIPMENT AND PROCEDURES

I. HTST PASTEURIZATION

OPERATION OF HTST SYSTEMS

HTST pasteurization has become important to the dairy industry because of the operating efficiencies which it affords. Properly operated, these units allow a high volume of production in a minimum of processing space.

The ability of HTST pasteurizers to assure a safe, finished product hinges on the reliability of the time-temperature-pressure relationships which must prevail whenever the system is in operation. It is important that the plant operator understand the HTST process in order to maintain proper surveillance over the equipment. The basic flow pattern is described below:

1. Cold raw milk, in a constant level supply tank, is drawn into the regenerator section of the HTST pasteurizer.

NOTE: Some operators prefer to bypass the regenerator when starting. Under this system, cold milk is drawn directly through the timing pump (step 3) and into the heater section. The remaining steps are performed without exception. This bypass arrangement facilitates and speeds up the starting operation. After forward flow is established at the flow-diversion device, the bypass, which may be manually or automatically controlled, is not used and the raw milk flows through the regenerator. A second start-up technique involves the use of sanitizing solution at 77 C (170 F). This is passed through the complete unit and followed immediately by milk. Dilution of the first milk does occur; however, care must be taken to prevent this from being packaged.

2. In the regenerator section, the cold raw milk is warmed by hot pasteurized milk flowing in a counter current direction on the opposite sides of thin stainless steel surfaces.

3. The raw milk, still under suction, passes through a positive displacement timing pump which delivers it under pressure through the rest of the HTST pasteurization system.

4. The raw milk is pumped through the heater section, where hot water or steam on opposite sides of thin stainless steel surfaces heats the milk to a temperature of at least 72°C (161°F).

5. The milk, at pasteurization temperature, and under pressure, flows through the holding tube where it is held for at least 15 seconds. (The maximum velocity of the milk through the holding tube is governed by the speed of the timing pump, the diameter and length of the holding tube and surface friction.)

6. After passing the sensing bulbs of an indicating thermometer and a recorder/controller, the milk passes into the flow-diversion device which automatically assumes a forward-flow position, if the milk passes the recorder/controller bulb at the preset cut-in temperature (i.e., 72°C (161°F).

7. Improperly heated milk flows through the diverted-flow line back to the raw milk constant level supply tank.

8. Properly heated milk flows through the forward-flow line to the pasteurized milk regenerator section where it serves to warm the cold raw milk and, in turn, is cooled.

9. The warm milk passes through the cooling section, where coolant, on the sides of thin stainless steel surfaces

opposite the pasteurized milk, reduces its temperature to 4°C (40°F) and below.

10. The cold pasteurized milk then passes to a storage tank or vat to await packaging.

HTST PASTEURIZERS EMPLOYING MILK-TO-MILK REGENERATORS WITH BOTH SIDES CLOSED TO THE ATMOSPHERE

Item 16, 2p(D) of Section 7 establishes standards for regenerators. These standards insure that the raw milk will always be under less pressure than pasteurized milk in order to prevent contamination of the pasteurized milk in the event flaws should develop in the metal or joints separating it from the raw milk. An explanation of regenerator specifications is given below.

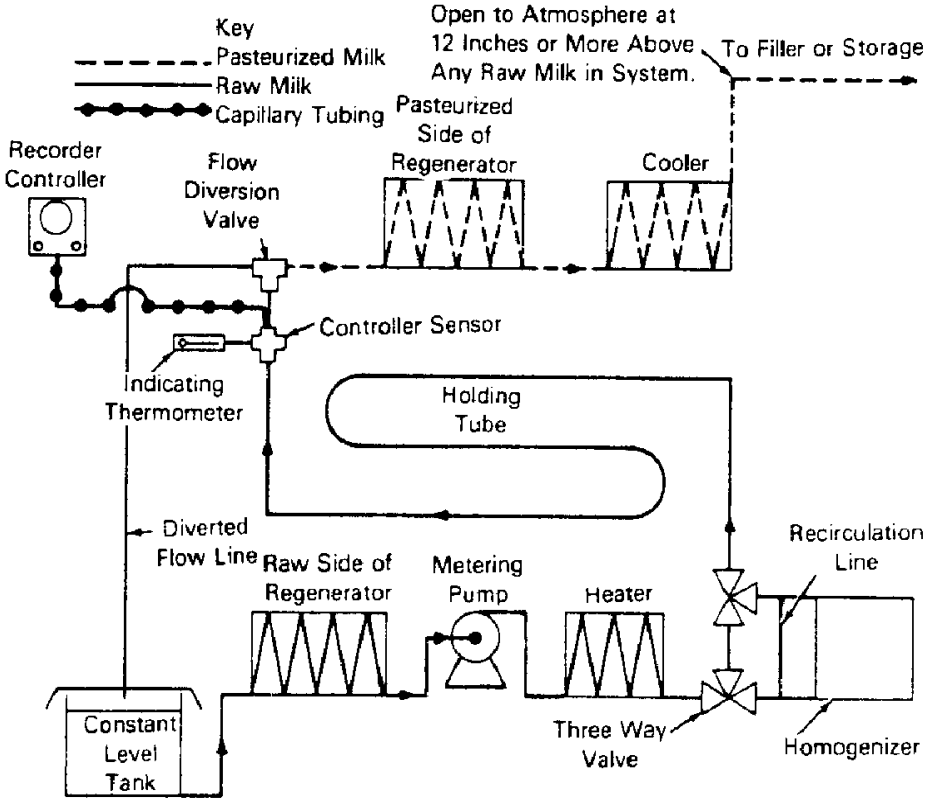

Figure 26. Milk-to-Milk Regeneration--Homogenizer Upstream from Holder

During normal operation (i.e., while the timing pump is operating), raw milk will be drawn through the regenerator at sub-atmospheric pressure. The pasteurized milk in the milk-to-milk regenerator will be above atmospheric pressure. The required pressure differential will be assured when there is no flow-promoting device downstream from the pasteurized milk side of the regenerator to draw the pasteurized milk through the regenerator, and the pasteurized milk downstream from the regenerator rises to at least 30 centimeters (1-foot elevation) above the highest raw milk level downstream from the constant-level tank, and is open to the atmosphere at this or a higher elevation, as required in Item 16, 2p(D)2.

During a shutdown (i.e., when the timing pump stops), the raw milk in the regenerator will be retained under suction, except as this suction may be gradually relieved by possible entrance of air drawn through the regenerator plate gaskets from the higher outside atmospheric pressure. With a free draining regenerator, as required under Item 16p(D)7, the raw milk level in the regenerator may drop slowly, depending on the tightness of the gaskets, ultimately falling below the level of the plates to the product level in the raw milk supply tank. However, under these conditions, as long as any raw milk remains in the regenerator, it will be at sub-atmospheric pressure.

During shutdown, the pasteurized milk in the regenerator is maintained at atmospheric pressure or above by meeting the elevation requirement of Item 16p(D)2. Pressure greater than atmospheric is maintained when the level of pasteurized milk is at or above the required elevation and loss of pressure, due to suction, is prevented by prohibiting a downstream pump.

Any backflow of milk through the flow-diversion device would lower the pasteurized milk level, during pump shut-downs, thus tending to reduce the pressure on the pasteurized milk side of the regenerator. A flow-diversion valve cannot be relied upon to prevent backflow in such instances, because during the first few minutes following a pump shutdown, the milk is still at a sufficiently high temperature to keep the diversion valve in the forward-flow position. Compliance with the provisions of Item 16p(D)2 and 3; however, will insure a proper pressure differential in the regenerator.

At the beginning of a run, from the time raw milk or water is drawn through the regenerator, until the pasteurized milk or water has risen to the elevation specified in Item 16p(D)2, the pasteurized milk side of the regenerator is at atmospheric pressure or higher. Even if the metering pump should stop during this period, the pressure on the pasteurized milk side of the regenerator will be greater than the sub-atmospheric pressure on the raw milk side. This will be assured by compliance with Item 16p(D)2 and 3, as long as any raw milk remains in the generator.

When a raw milk booster pump is incorporated into the HTST system, Item 16p(D)5 requires, in part, that automatic means shall be provided to assure, at all times, the required pressure differential between raw and pasteurized milk in the regenerator, before the booster pump can operate.

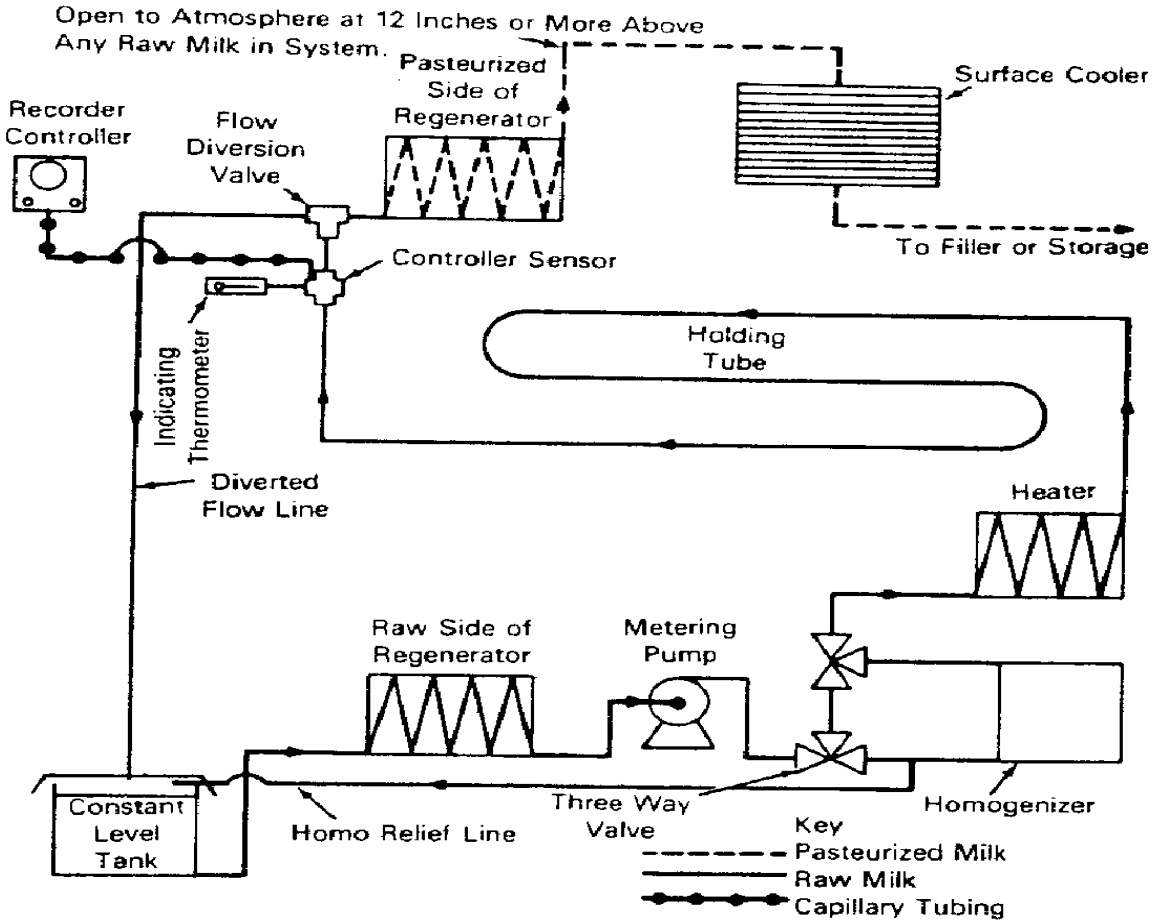

Figure 27. Milk-to-Milk Regeneration--Surface Cooler

THE USE OF SEPARATORS WITHIN HTST SYSTEMS

Separators in HTST pasteurization systems must be installed and operated in such a manner that they will not adversely effect the regenerator pressures, create a negative pressure on the flow diversion device (FDD) during operation or cause product flow through the holding tube during times when such flow would compromise a required public health safe guard.

1. A separator may be located between the outlet of a raw regenerator and the timing pump or between raw regenerator sections if the separator is automatically valved out of the system, and separator stuffing pump(s) are de-energized, when:

a. The timing pump is not in operation;

or,

b. A dual stem FDD is in the inspect position;

or,

c. In a system with a dual stem FDD in which the separator is located between sections of a raw regenerator, during the first ten minutes of a required ten minute delay in CIP mode and during any period of diverted flow;

or,

d. The pressures in any raw regenerator sections, located after the

separator, are out of compliance with PMO pressure requirements.

(Note: the second section of a split raw side regenerator must freely drain back to the constant level tank or to the floor in the event of a shut down).

2. A separator may not be located between the timing pump and the FDD.

3. A separator may be located on the pasteurized side of the FDD if:

a. A properly installed atmospheric break is located between the FDD and the inlet of the separator.

b. All product rises to at least one foot higher than the highest raw milk in the system and is open to the atmosphere at some point between the outlet of the separator and the inlet of any pasteurized side regenerator.

c. All product rises to at least one foot higher than the highest raw milk in the system and is open to the atmosphere at some point between the outlet of any pasteurized side regenerator and the inlet of a separator.

d. The separator is automatically valved out of the system, and the separator stuffing pump is de-energized:

- when a dual stem FDD is in the first ten minutes of a required ten minute delay in CIP mode.
- when the FDD is diverted in product or inspect mode.
- when the timing pump is not in operation.
- when the temperature is below the required pasteurization temperature and the FDD is not in the fully diverted position.

4. The following criteria applies to installations where a separator must be valved out:

a. A valve must be located to isolate the product supply line from the separator.

b. A valve must be located to prevent all flow exiting the separator from being returned to the pasteurization system down stream of the separator.

c. The valves required to move in order to accomplish the two criteria listed above must move to the valved out position, and any separator stuffing pumps must be de-energized, upon loss of air or power.

MAGNETIC FLOW METER BASED TIMING SYSTEMS FOR HTST PASTEURIZERS

Recent developments in the design of HTST pasteurizing systems have introduced the use of magnetic flow meter based timing systems to be used as replacements for positive displacement timing pumps with a fixed or sealed speed below the required holding time.

These systems are of two basic types:

1. Those employing a constant speed centrifugal pump and a control valve, or
2. Those employing an A-C variable frequency motor speed control for the centrifugal pump. In this case the timing pump may be centrifugal or positive displacement type.

Item 16p(B)2(f) of Section 7 provides for their use provided, they meet the following specifications for design, installation and use.

COMPONENTS--Magnetic flow meter based timing systems shall consist of the following components:

1. A sanitary magnetic flow meter which has been reviewed by USPHS/FDA or one which is equally accurate, reliable and will produce six (6) consecutive measurements of holding time within one-half (0.5) second of each other.

2. Suitable converters for conversion of electric and/or air signals to the proper mode for the operation of the system.

3. A suitable flow recorder capable of recording flow at the flow alarm set point and also at least 19 liters (5 gallons) per minute higher than the flow alarm setting. The flow recorder shall have an event pen which shall indicate the position of the flow alarm with respect to flow rate.

4. A flow alarm, with an adjustable set point, shall be installed within the system which will automatically cause the flow-diversion device to be moved to the divert position whenever excessive flow rate causes the product holding time to be less than the legal holding time for the pasteurization process being used. The flow alarm shall be tested by the regulatory agency in accordance with the procedures of Appendix I, Test 11, 2. A and B at the frequency specified. The flow alarm adjustment shall be sealed.

5. A loss of signal alarm shall be installed with the system which will automatically cause the flow-diversion device to be moved to the divert position whenever there is a loss of signal from the meter. The loss of signal provision shall be tested by the regulatory agency in accordance with Appendix I, Test 11.2.C at the frequency specified. The loss of signal provision shall be sealed.

6. When the legal flow rate has been re-established, following an excessive flow rate, a time delay must be instituted which will prevent the flow-diversion device from assuming the forward flow position until at least a 15 seconds (milk) or 25 seconds (frozen dessert mix) continuous legal flow has been re-established. The time delay must be tested by the regulatory agency and if it is of the adjustable type shall be sealed.

7. When a constant speed centrifugal pump is used, a sanitary, spring-loaded-to- close; air-to-open, control valve shall be used to control the rate of flow of product through the HTST system.

8. When an A-C variable frequency motor speed control is used on the timing pump, the control valve is not needed as the flow rate of product through the system is controlled by feeding the signal from the magnetic flow meter to a controller which in turn varies the A-C frequency to the pump motor, thus controlling the flow rate of product through the system. With these A-C variable frequency systems, a sanitary product check valve is needed, in the sanitary milk pipe line to prevent a positive pressure in the raw milk side of the regenerator whenever a power failure, shutdown or flow-diversion occurs.

9. When a regenerator is used with large systems, it will be necessary to bypass the regenerator during start-up and when the flow-diversion device is in the diverted flow position. Care should be taken in the design of such bypass systems to assure that a dead-end does not exist. A dead-end could allow product to remain at ambient temperature for long periods of time and allow bacterial growth in the product. Caution should also be observed with such bypass systems and any valves used in them so that raw milk product will not be trapped, under pressure in the raw regenerator plates, and not have free drainage back to the constant level tank when shutdown occurs.

10. Most systems will utilize a dual stem flow-diversion device and will be using the timing pump during the mechanical cleaning cycle. All public health controls, required of such systems, must be applicable. When switching to the CIP position, the flow-diversion device must move to the divert position and must remain in the diverted flow position for at least 10 minutes, regardless of temperature, and the booster pump cannot run during this 10 minute time delay.

11. All systems shall be designed, installed and operated so that all applicable tests required by Section 7, Item 16p(E) (See Appendix I) can be performed by the regulatory agency, at the frequency specified. Where adjustment or changes can be made to these devices or controls, appropriate seals shall be applied after testing so that changes cannot be made without detection.

12. Except for those requirements directly related to the physical presence of the metering pump, all other requirements of the most recent edition of the *Grade "A" Pasteurized Milk Ordinance* are applicable.

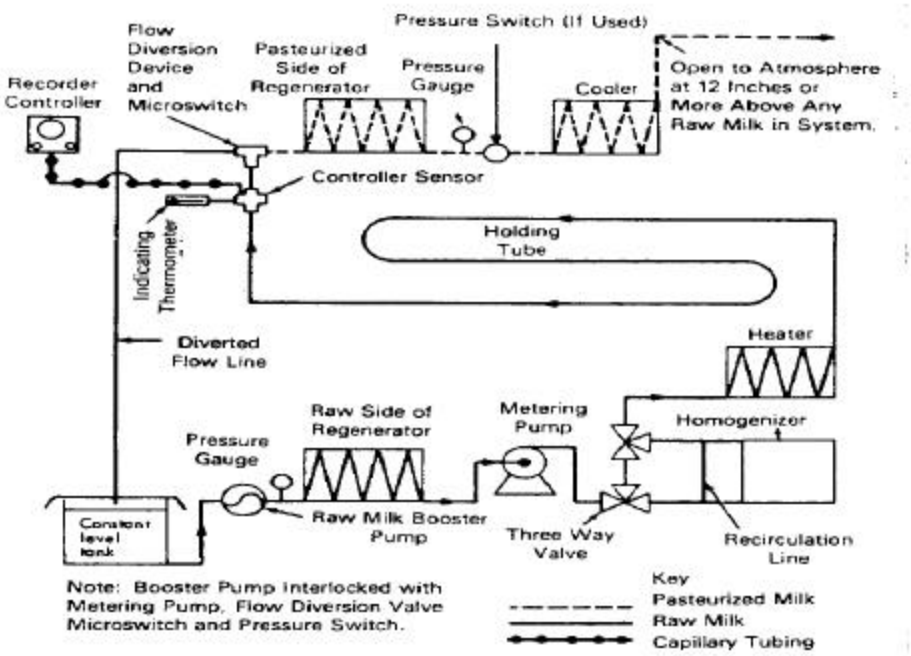

Figure 28. Milk-to-Milk Regeneration--Booster Pump

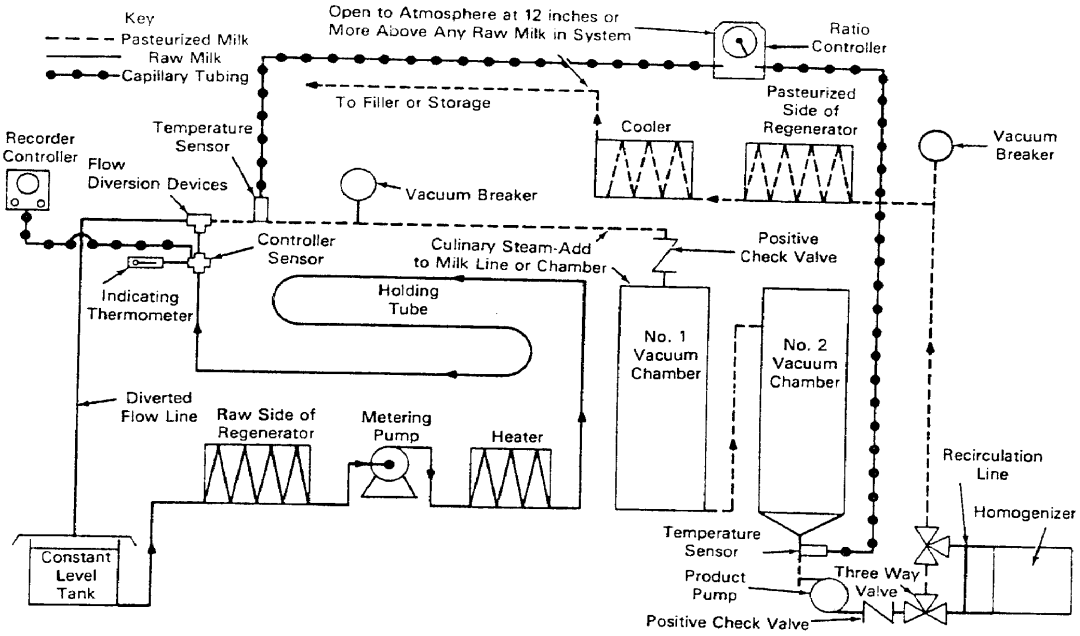

Figure 29. Milk-to-Milk Regeneration--Homogenizer and Vacuum Chambers Downstream from Flow-Diversion

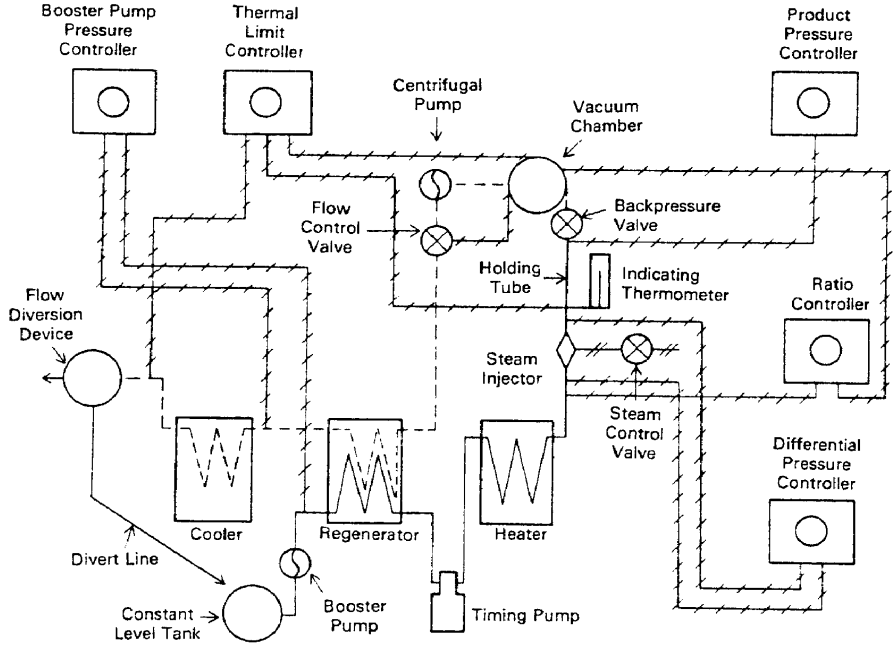

Figure 30. Controls for Steam Injection Pasteurizer

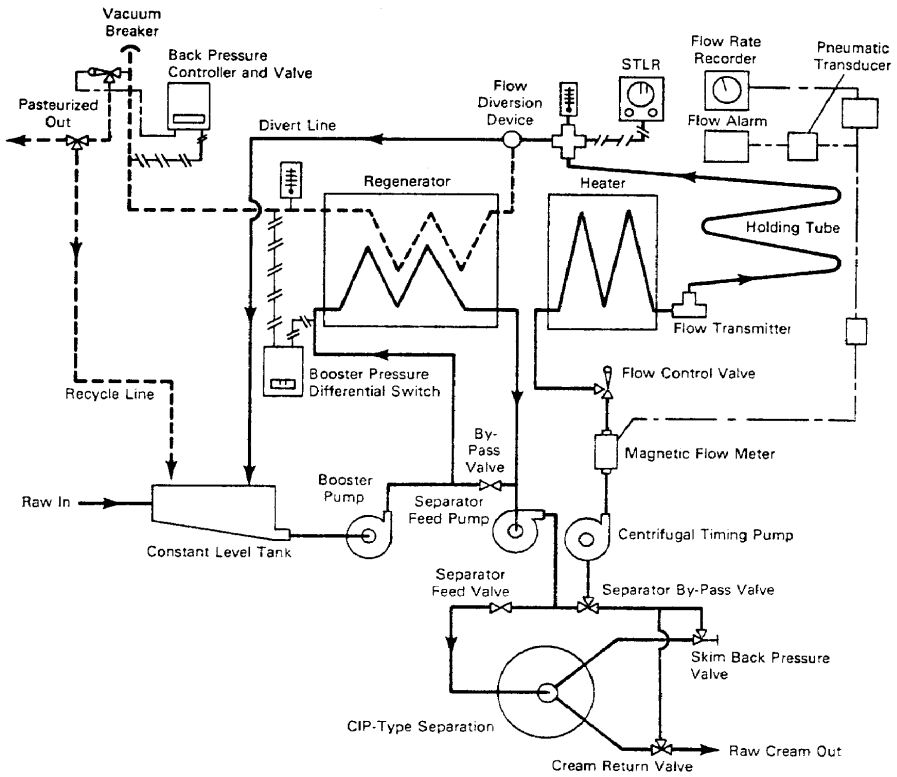

Figure 31. HTST System with a Magnetic Flow Meter Using a Constant Speed Centrifugal Pump and a Control Valve

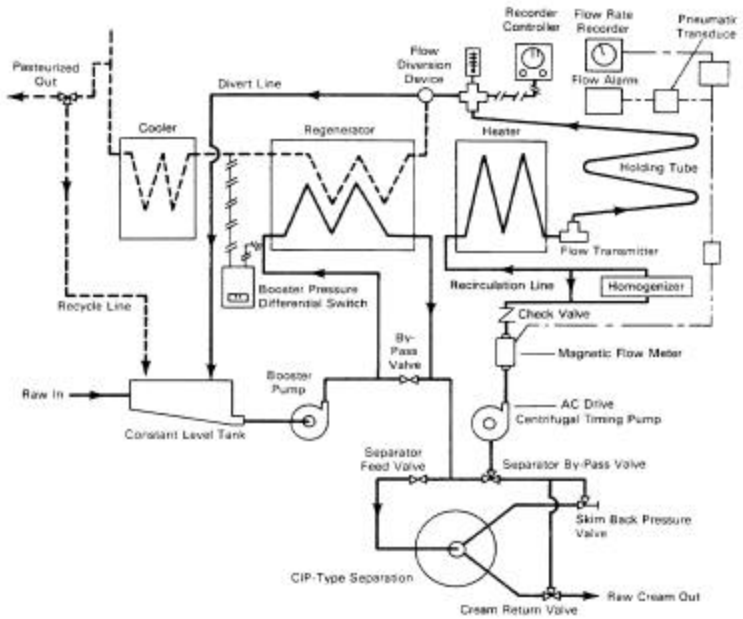

Figure 32. HTST System with a Magnetic Flow Meter Using an A-C Variable Speed Centrifugal Pump

PLACEMENT OF COMPONENTS--

Individual components in the magnetic flow meter based timing systems shall comply with the following placement condition:

1. The timing pump shall be located downstream from the raw milk regenerator section, if a regenerator is used.
2. The magnetic flow meter shall be placed downstream from the timing pump. There shall be no intervening flow promoting components between the timing pump and the meter.
3. The control valve, used with the constant speed timing pump, shall be located downstream of the magnetic flow meter.
4. The timing pump, the magnetic flow meter, the control valve, when used with the constant speed timing pump system, and the sanitary product check valve, when used with the A-C variable frequency motor speed control system, shall all be located upstream from the start of the holding tube.
5. All flow promoting devices, which are upstream of the flow-diversion device, such as timing pumps (constant speed or A-C variable frequency motor control types), booster pumps, stuffer pumps, separators and clarifiers shall be properly interwired with the flow-diversion device so that they may run and produce flow through the system at sublegal temperatures, only when the flow-diversion device is in the fully diverted position, when in product run mode. Separators or clarifiers which continue to run, after power is shut off to them, must be automatically valved out of the system, with fail-safe valves, so that they are incapable of producing flow.
6. There shall be no product entering or leaving the system (i.e., cream or skim from a separator or other product components) between the timing pump and the flow-diversion device.
7. The magnetic flow meter shall be so installed that the product has contact with both electrodes at all times when there is flow through the system. This is most easily accomplished by mounting the flow tube of the magnetic flow meter in a vertical position with the direction of flow from the bottom to the top. However, horizontal mounting is acceptable when other precautions are taken to assure that both electrodes are in contact with product. They should not be mounted on a high horizontal line which may be only partially full and thereby trap air.
8. The magnetic flow meter shall be piped in such a manner that at least 10 pipe diameters of straight pipe exists, upstream and downstream from the center of the meter, before any elbow or change of direction takes place. Figure 31 and 32 are schematic drawings of two typical magnetic flow meter based timing systems which illustrate proper placement of components.

II. AIR UNDER PRESSURE; MILK AND MILK PRODUCT-CONTACT SURFACES

MATERIAL

Filter Media: Air intake and pipeline filters shall consist of fiberglass, cotton flannel, wool flannel, spun metal, electrostatic material or other equally acceptable filtering media, which are non-shedding and which do not release to the air, toxic volatiles, or volatiles which may impart any flavor or odor to the product.

Disposable media filters shall consist of cotton flannel, wool flannel, spun metal, non-woven fabric, U.S.P. absorbent cotton fiber or suitable inorganic materials which, under conditions of use, are non-toxic and non-shedding. Chemical bonding material,

contained in the media, shall be nontoxic, nonvolatile and insoluble under all conditions of use. Disposable media shall not be cleaned and reused.

Filter Performance: The efficiency of intake filters shall be at least 50 percent as measured by the National Institute of Standards and Technology's "Dust Spot Method"[a] using atmospheric dust as the test aerosol.

The efficiency of either air pipeline filters or disposable filters shall be at least 50 percent as measured by the DOP (Dioctyl 1-phthalate fog)[b] test.

Piping: Air distribution piping, fittings and gaskets between the terminal filter and any product-contact surface, shall be sanitary milk piping, except, where the compressing equipment is of the fan or blower type. When the air is used for such operations, as removing containers from mandrels, other non-toxic materials may be used.

FABRICATION AND INSTALLATION

Air Supply Equipment: The compressing equipment shall be designed to preclude contamination of the air with lubricant vapors and fumes. Oil-free air may be produced by one of the following methods or their equivalent:

1. Use of a carbon ring piston compressor.
2. Use of oil-lubricated compressor with effective provision for removal of any oil vapor by cooling the compressed air.
3. Water-lubricated or nonlubricated blowers.

The air supply shall be taken from a clean space or from relatively clean outer air and shall pass through a filter upstream from the compressing equipment. This filter shall be located and constructed so that it is easily accessible for examination, and the filter media are easily removable for cleaning or replacing. The filter shall be protected from weather, drainage, water, product spillage and physical damage.

Moisture Removal Equipment: If it is necessary to cool the compressed air, an aftercooler shall be installed between the compressor and the air storage tank for the purpose of removing moisture from the compressed air.

Filters and Moisture Traps: Filters shall be constructed so as to assure effective passage of air through the filter media only.

The air under pressure shall pass through an oil-free filter and moisture trap for removal of solids and liquids. The filter and trap shall be located in the air pipeline, downstream from the compressing equipment, and from the air tank, if one is used. Air pipeline filters and moisture traps, downstream from compressing equipment, shall not be required where the compressing equipment is of the fan or blower type.

A disposable media filter shall be located in the sanitary air pipelines upstream from and as close as possible to each point of application or ultimate use of the air.

Air Piping: The air piping from the compressing equipment to the filter and moisture trap shall be readily drainable.

A product-check valve of sanitary design shall be installed in the air piping, downstream from the disposable media filter, to prevent backflow of product into the air pipeline, except that a check valve shall not be required if the air piping enters the product zone from a point higher than the product overflow level which is open to the atmosphere.

The requirements of this section do not apply when the compressing equipment

is of the fan or blower type. See illustrations depicting various air supply systems.

NOTE: For additional details, see *3A Accepted Practices for Supplying Air Under Pressure in Contact with Milk, Milk Products and Product-Contact Surfaces.*

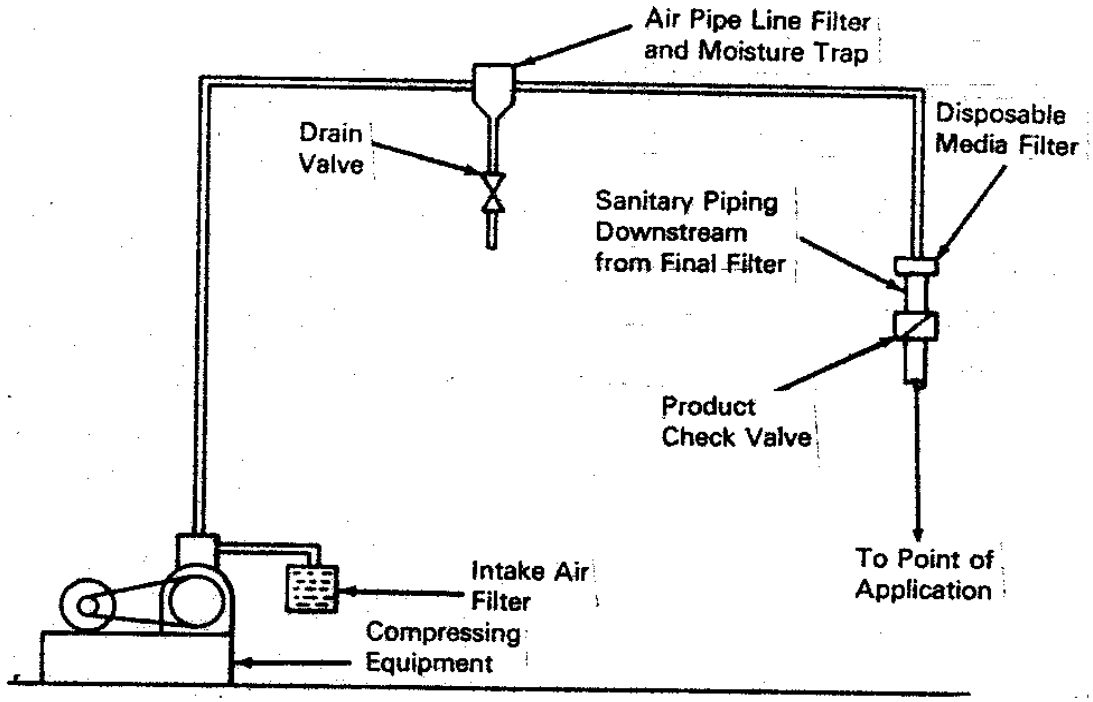

Figure 33. Individual Compression-Type Air Supply

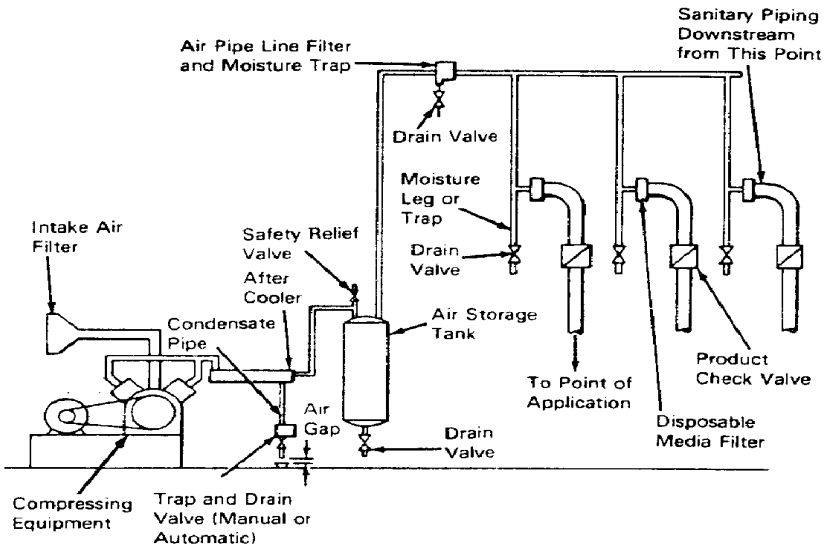

Figure 34. Central Compression-Type Air Supply

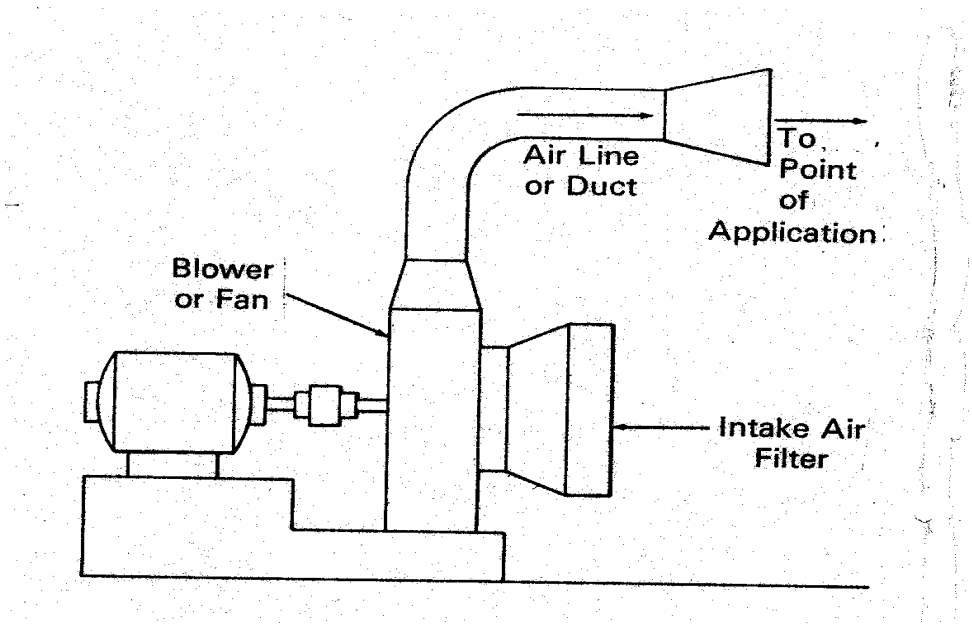

Figure 35. Individual Blower Type Air Supply

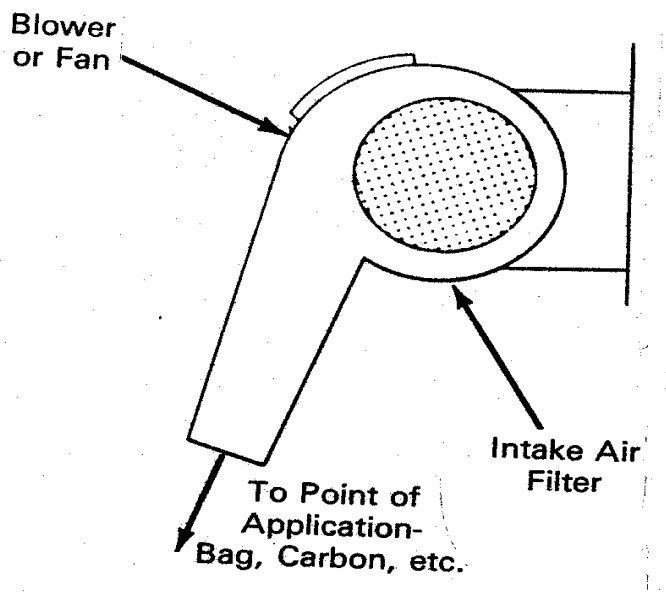

Figure 36. Individual Fan Type Air Supply

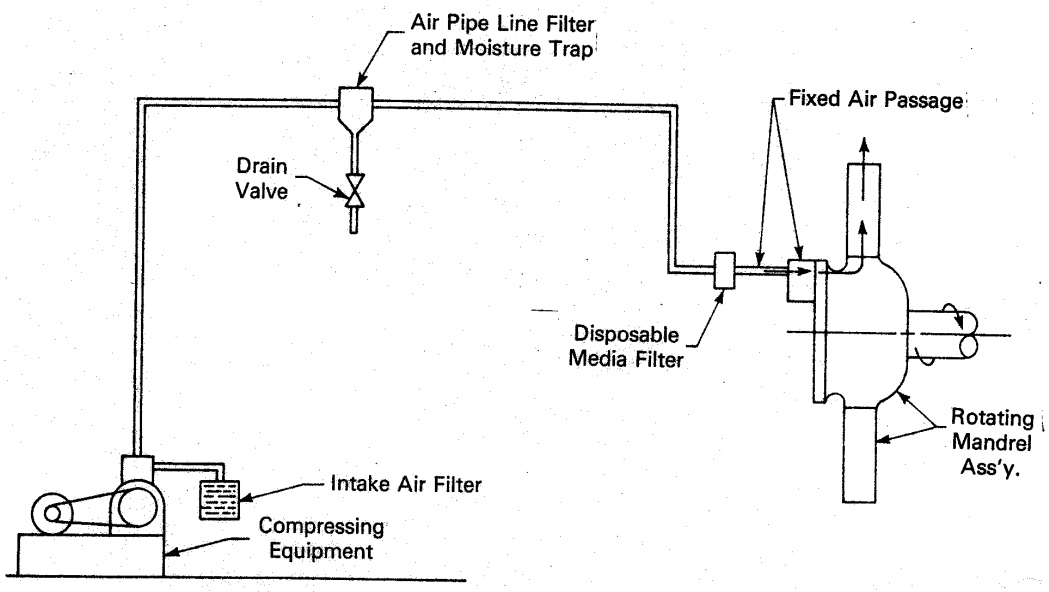

Figure 37. Rotating Mandrel Assembly

III. CULINARY STEAM; MILK AND MILK PRODUCTS

The following methods and procedures will provide steam of culinary quality for use in the processing of milk and milk products.

SOURCE OF BOILER FEED WATER

Potable water or water supplies, acceptable to the regulatory agency, will be used.

FEED WATER TREATMENT

Feed waters may be treated, if necessary, for proper boiler care and operation. Boiler feed water treatment and control shall be under the supervision of trained personnel or a firm specializing in industrial water conditioning. Such personnel shall be informed that the steam is to be used for culinary purposes. Pretreatment of feed waters for boilers or steam generating systems to reduce water hardness, before entering the boiler or steam generator by ion exchange or other acceptable procedures, is preferable to the addition of conditioning compounds to boiler waters. Only compounds complying with Section 173.310 of Title 21 of the *Code of Federal Regulations* may be used to prevent corrosion and scale in boilers, or to facilitate sludge removal.

Greater amounts shall not be used of the boiler water treatment compounds than the minimum necessary for controlling boiler scale or other boiler water treatment purposes. No greater amount of steam shall be used for the treatment and/or pasteurization of milk and milk products than necessary.

It should be noted that tannin, which is also frequently added to boiler water to facilitate sludge removal during boiler blow-down, has been reported to give rise to odor problems, and should be used with caution.

Boiler compounds containing cyclohexylmine, morpholine, octadecylamine, diethylaminoethanol, trisodium nitrilotriacetae, and hydrazine shall not be permitted for use in steam in contact with milk and milk products.

BOILER OPERATION

A supply of clean, dry saturated steam is necessary for proper equipment operation. Boilers and steam generation equipment shall be operated in such a manner as to prevent foaming, priming, carryover and excessive entrainment of boiler water into the steam. Carryover of boiler water additives can result in the production of milk off-flavors. Manufacturers' instructions regarding recommended water level and blow-down should be consulted and rigorously followed. The blow-down of the boiler should be carefully watched, so that an over-concentration of the boiler water solids and foaming is avoided. It is recommended that periodic analyses be made of condensate samples. Such samples should be taken from the line between the final steam separating equipment and the point of the introduction of steam into the product.

PIPING ASSEMBLIES

Suggested piping assemblies for steam infusion or injection were shown previously.

Other assemblies which will assure a clean, dry saturated steam are acceptable.

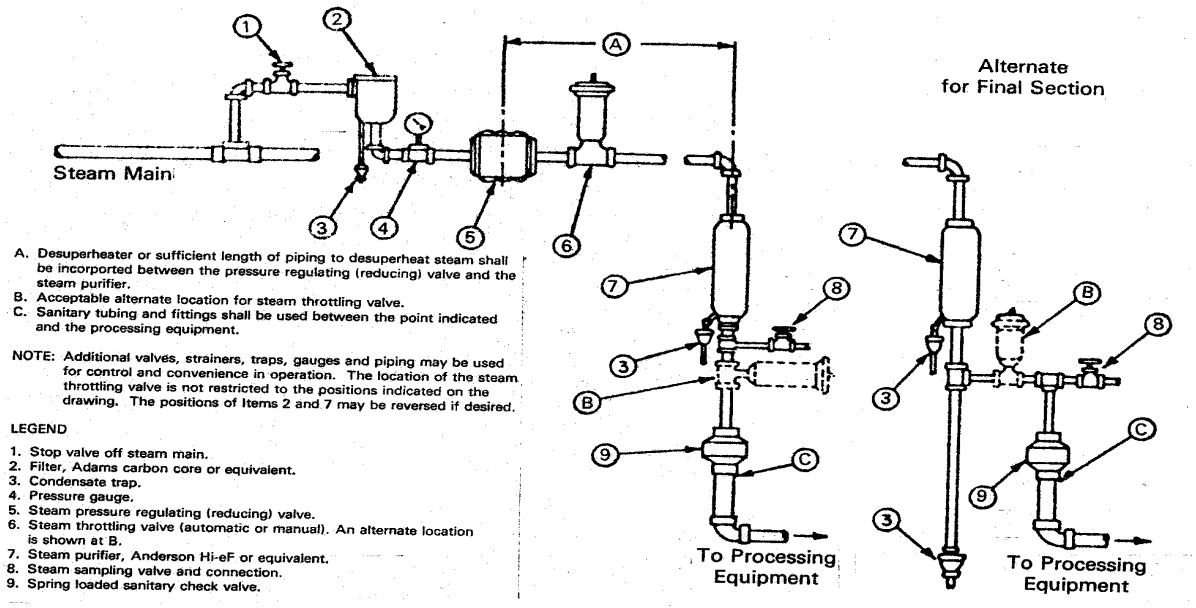

Figure 38. Culinary Steam Piping Assembly for Steam Infusion or Injection

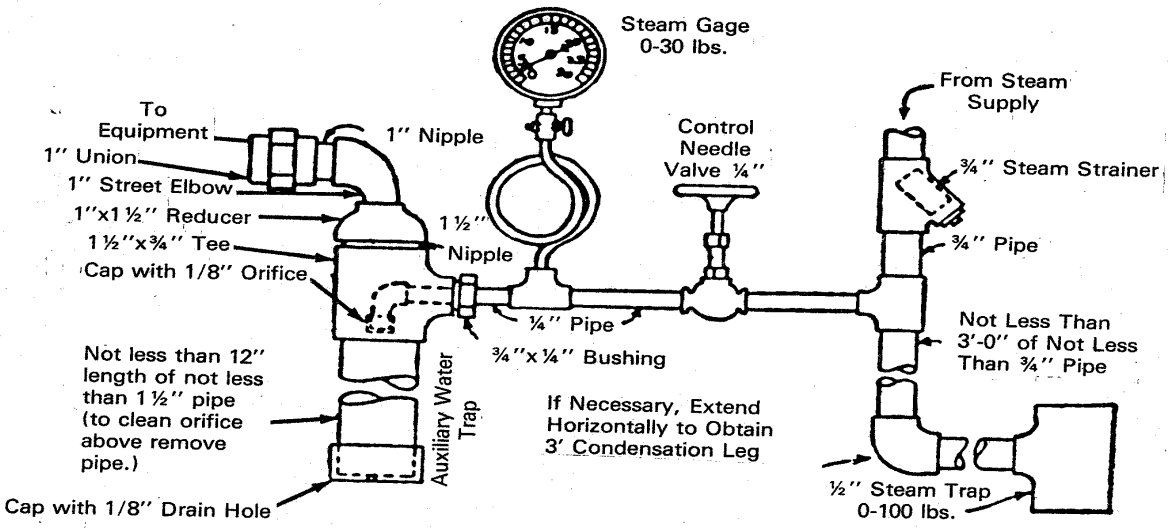

Figure 39. Culinary Steam Piping Assembly for Airspace Heating or Defoaming

IV. THERMOMETER SPECIFICATIONS

INDICATING THERMOMETERS FOR BATCH PASTEURIZERS

Mercury-actuated, direct-reading; contained in a corrosion-resistant case, which protects against breakage and permits easy observation of column and scale; filling above mercury, nitrogen or other suitable gas.

Magnification of Mercury Column: To apparent width of not less than 1.6 millimeters (0.0625 of an inch).

Scale: Shall have a span of not less than 14 Celsius degrees (25 Fahrenheit degrees), including the pasteurization temperature, plus and minus 3°C (5 F); graduated in 0.5° C (1 F) divisions, with not more than 9 Celsius degrees (16 Fahrenheit degrees) per inch of span; protected against damage at 105° C (220° F). *Provided*, that on batch pasteurizers used solely for 30-minute pasteurization of milk products at temperatures above 71° C (160° F), indicating thermometers with 1° C (2° F) scale graduations, with not more than 6° C per centimeters (28 Fahrenheit degrees per inch) of span, may be used.

Accuracy: Within 0.2° C (0.5° F), plus or minus, through the specified scale span. *Provided*, that on batch pasteurizers used solely for 30-minute pasteurization of milk products at temperatures above 71° C (160° F), indicating thermometers shall be accurate to within .5° C (1° F) plus or minus. (Appendix I, Test 1).

Submerged Stem Fitting: Pressure-tight seat against inside wall of holder; no threads exposed to milk; location of seat to conform to that of the 3A Sanitary Standard for a wall-type fitting or other equivalent sanitary fitting.

Bulb: Corning normal or equally suitable thermometric glass.

INDICATING THERMOMETERS LOCATED ON PASTEURIZATION PIPELINES

Type:

1. Mercury-actuated; direct-reading; contained in corrosion-resistant case, which protects against breakage and permits easy observation of column and scale; filling above mercury, nitrogen or equally suitable gas.
2. Digital;

a. No more than 0.2° C (0.5° F) drift over 3 months use on an HTST system compared to a certified temperature source.

b. Self-diagnostic circuitry which provides constant monitoring of all sensing, input and conditioning circuits. The diagnostic circuitry should be capable of detecting “open” circuits, “short” circuits, poor connections and faulty components. Upon detection of failure of any component the device shall blank or become unreadable.

c. The electromagnetic compatibility of this device for this use shall be documented and available to public health authorities. The device must be tested to determine the effects of electrostatic discharge, power fluctuation, conductive emission and susceptibility, and radiative emission and susceptibility. The device must comply to the requirements for performance level characteristics of industrial devices. Protocols for these tests shall be developed by vendors with FDA concurrence.

d. The effect of exposure to specific environmental conditions sahll be

documented. The device must be tested to determine the effects of low and high temperatures, thermal shock, humidity, physical shock and salt fog. Protocols for these tests shall be developed by vendors with FDA concurrence.

e. Both probe and display case shall be constructed so that they may be sealed by a regulatory agency.

f. Calibration of the device shall be protected against unauthorized changes.

g. The device shall be protected against unauthorized component or sensing element replacement. Replacement of any component or sensing element shall be regarded as a replacement of the indicating thermometer and subject to regulatory agency inspection and all applicable tests under Appendix I, Grade "A" PMO.

h. The sensing element shall be encased in appropriate material constructed in such way that the final assembly meets the conditions of PMO item 11p.

i. The device must be tested from the sensing probe through the final output.

Scale: Shall have a span of not less than 14 Celsius degrees (25 Fahrenheit degrees), including the pasteurization temperature, plus and minus 02.5° C (5° F) division, protected against damage at 105° C (220° F). Mercury actuated thermometers shall be graduated in 0.2° C (0.5° F) divisions with not more than 4 Celsius degrees (8 Fahrenheit degrees) per 25 millimeters (inch) of scale. Digital thermometer readout shall be display in units with a least count of 0.05° C (0.1°F).

Accuracy: Within 0.2° C (0.5° F), plus or minus, throughout the specified scale span. (Appendix I, Test 1).

Stem Fittings: Pressure-tight seat against inside wall of fittings; no threads exposed to milk. Probe to be designed such that sensitive area is discernible from the remainder of the stem. Overall probe length to be such that the sensitive area is positioned in the product flow path when properly installed.

Thermometric Response: When the thermometer is at room temperature and then is immersed in a well-stirred water bath 11° C (19° F) or less above the pasteurization temperature; the time required for the reading to increase from water bath temperature, minus 11° C (19° F), to water bath temperature, minus 4° C (7° F), shall not exceed 4 seconds. (Appendix I, Test 7). Digital thermometer displays shall change at a rate that can be noted by the operator or regulatory agency during the thermometric lag test (Appendix I, Test 7).

Bulb: Corning normal, or equally suitable thermometric glass.

AIRSPACE INDICATING THERMOMETER FOR BATCH PASTEURIZERS

Type: Mercury-actuated, direct-reading; contained in corrosion-resistant case, which protects against breakage and permits easy observation of column and scale; bottom of bulb chamber, not less than 51 millimeters (2 inches) and not more than 89 millimeters (3.5 inches), below underside of cover; filling above mercury, nitrogen or equally suitable gas.

Magnification of Mercury Column: To apparent width of not less than 159 millimeters (0.0625 of an inch).

Scale: Shall have a span of not less than 14 Celsius degrees (25 Fahrenheit degrees), including the 66° C (150° F), plus and minus 3° C (5° F); graduated in not more than 1° C (2° F) divisions, with not

more than 9 Celsius degrees (16 Fahrenheit degrees) per 25 millimeters (inch) of scale; protected against damage at (105° C) 220° F.

Accuracy: Within 0.5°C (1°F), plus or minus, throughout the specified scale span. (Appendix I, Test 1).

Stem Fittings: Pressure-tight seat or other suitable sanitary fittings. No threads exposed.

RECORDING THERMOMETERS FOR BATCH PASTEURIZERS UTILIZING TEMPERATURES LESS THAN 71°C (160°F)

Case.—Moisture proof under normal operating conditions in pasteurization plants.

Scale: Shall have a span of not less than 11 Celsius degrees (20 Fahrenheit degrees), including pasteurization temperature, plus and minus 3° C (5.0° F), graduated in temperature-scale divisions of 0.5° C (1° F), spaced not less than 1.6 millimeter (0.0625 of an inch) apart between 60° C and 69° C (140 F° and 155° F). *Provided*, that temperature-scale divisions of 0.5° C (1° F), spaced not less than 1 millimeter (0.040 of an inch) apart, are permitted when the ink line is thin enough to be easily distinguished from the printed line; graduated in time-scale divisions of not more than 10 minutes; and having a chord of straight-line length of not less than 6.3 millimeters (0.25 inch), between 63° C and 66° C (145° F and 150° F).

Temperature Accuracy: Within 0.5° C (1° F), plus or minus, between 60° C and 69° C (140° F and 155° F) (Appendix I, Test 2).

Time Accuracy: The recorded elapsed time, as indicated by the chart rotation, shall not exceed the true elapsed time, as compared to an accurate watch, over a period of at least 30 minutes at pasteurization temperature. Recorders for batch pasteurizers may be equipped with spring operated or electrically operated clocks (Appendix I, Test 3).

Pen-Arm Setting Device: Easily accessible; simple to adjust.

Temperature Sensing Device: Protected against damage at a temperature of 105° C (220° F).

Submerged Stem Fitting: Pressure-tight seat against inside wall of holder, no threads exposed to milk or milk products. Distance from underside of ferrule to the sensitive portion of the bulb to be not less than 76 millimeters (3 inches).

Chart Speed: A circular chart shall make one revolution in not more than 12 hours. Two charts shall be used if operations extend beyond 12 hours in 1 day. Circular charts shall be graduated for a maximum record of 12 hours. Strip-charts may show a continuous recording over a 24-hour period.

Chart Support Drive: The rotating chart support drive shall be provided with a pin to puncture the chart in a manner to prevent its fraudulent rotation.

UTILIZING TEMPERATURES GREATER THAN 71 C (160 F)

Batch pasteurizers used solely for 30-minute pasteurization of milk products at temperature above 71° C (160° F) may use recording thermometers with the following options:

Scale: Graduated in temperature scale divisions of 1° C (2° F), spaced not less than 1 millimeter (.040 of an inch) apart between 65° C and 77° C (150° F and 170° F), graduated in time-scale divisions of not more than 15 minutes and having a chord of straight-line length of not less than 6.3 millimeters (0.25 inch) between 71° C and 77° C (160° F and 170° F).

Temperature Accuracy: Within 1° C (2° F), plus or minus, between 71° C and 77° C (160° F and 170° F).

Chart Speed: A circular chart shall make one revolution in not more than 24 hours and shall be graduated for a maximum record of 24 hours.

RECORDER/CONTROLLERS FOR CONTINUOUS PASTEURIZERS

Case.—Moisture proof under normal operating conditions in pasteurization plants.

Chart Scale: Shall have a span of not less than 17 Celsius degrees (30 Fahrenheit degrees), including the temperature at which diversion is set, plus and minus, 7° C (12° F), graduated in temperature scale divisions of 0.5° C (1° F), spaced not less than 1.6 millimeter (0.0625 of an inch) apart at the diversion temperature, plus or minus, 0.5° C (1° F). *Provided*, that temperature-scale divisions of 0.5° C (1° F), spaced not less than 1 millimeter (0.040 of an inch) apart, are permitted when the ink line is thin enough to be easily distinguished from the printed line, graduated in time-scale divisions of not more than 15 minutes, and having an equivalent 15 minute chord or straight-line length of not less than 6.3 millimeters (0.25 of an inch) at the diversion temperature, plus or minus 0.5° C (1° F).

Temperature Accuracy: Within 0.5° C (1° F), plus or minus, at the temperature at which the controller is set to divert, plus and minus 3° C (5° F) (Appendix I, Test 2).

Power Operated: All recorder/controllers for continuous pasteurization shall be electrically operated.

Pen-Arm Device: Easily accessible; simple to adjust.

Pen and Chart Paper: Pen designed to give line not over .07 millimeter (0.025 of an inch) wide; easy to maintain.

Temperature Sensing Device: Bulb, tube, spring or thermistor, protected against damage at a temperature of 105° C (220° F). *Provided*, that recorder controller temperature sensing devices, used on HHST systems, shall be protected against damage at temperatures of 149° C (300° F).

Submerge Stem Fitting: Pressure-tight seat against inside wall of pipe; no threads exposed to milk or milk products; and location from underside of ferrule to the sensitive portion of the bulb not less than 76 millimeters (3 inches).

Chart Speed: A circular chart shall make one revolution in not more than 12 hours. Two charts shall be used if operations extend beyond 12 hours in 1 day. Circular charts shall be graduated for a maximum record of 12 hours. Strip-charts may show a continuous recording over a 24-hour period.

Frequency Pen: The recorder/controller shall be provided with an additional pen-arm for recording, on the outer edge of the chart, the record of the time at which the flow-control device is in

the forward-flow, diverted-flow or stopped position. The chart time line shall correspond with the reference arc, and the recording pen shall rest upon the time line matching the reference arc.

Controller: Actuated by same sensor as recorder pen, but cut-in and cut-out response independent of pen-arm movement.

Controller Adjustment: Mechanism for adjustment of response temperature simple, and so designed that the temperature setting cannot be changed or the controller manipulated without detection.

Thermometric Response: With the recorder/controller bulb at room temperature and then immersed in a well stirred water or oil bath at 4oC (7oF) above the cut-in point, the interval between the moment when the recording thermometer reads 7oC (12oF) below the cut-in temperature and the moment of power cut-in shall be not more than 5 seconds (Appendix I, Test 8).

Chart Support Drive: The rotating chart support drive shall be provided with a pin to puncture the chart in a manner to prevent its fraudulent rotation.

INDICATING THERMOMETERS USED IN STORAGE TANKS

Scale Range: Shall have a span not less than 28 Celsius degrees (50 Fahrenheit degrees), including normal storage temperatures, plus and minus 3° C (5° F), with extension of scale on either side permitted and graduated in not more than 1° C (2° F) divisions.

Temperature Scale Division: Spaced not less than 1.6 millimeters (0.0625 of an inch) apart between 2° C and 13° C (35° F and 55° F).

Accuracy: Within 1° C (2° F), plus or minus, throughout the specified scale range.

Stem Fitting: Pressure-tight seat or other suitable sanitary fittings. No threads exposed.

RECORDING THERMOMETERS USED IN STORAGE TANKS

Case: Moistureproof under operating conditions in processing plants.

Scale: Shall have a scale span of not less than 28 Celsius degrees (50 Fahrenheit degrees) including normal storage temperature, plus and minus 3° C (5° F), graduated in not more than 1° C (2° F) divisions, spaced not less than 1 millimeter (0.040 of an inch) apart, are permitted when the ink line is thin enough to be easily distinguished from the printed line and graduated in time scale divisions of not more than 1 hour, having a chord of straight-line length of not less than 3.2 millimeter (0.125 of an inch) at 5° C (40° F). Chart must be capable of recording temperatures up to 83° C (180° F). (Span specifications do not apply to extensions beyond 38° C (100° F).

Temperature Accuracy: Within 1° C (2° F), plus or minus, between specified range limits.

Pen-Arm Setting Device: Easily accessible; simple to adjust.

Pen and Chart Paper: Designed to give line not over .635 millimeter (0.025 of an inch) thick when in proper adjustment; easy to maintain.

Temperature Sensor: Protected against damage at 100° C. (212° F).

Stem Fittings: Pressure-tight seat or other suitable sanitary fitting. No threads exposed.

Chart Speed: The circular chart shall make one revolution in not more than 7 days and shall be graduated for a maximum record of 7 days. Strip chart shall move not less than 25 millimeter (1 inch) per hour and may be used continuously for 1 calendar month.

RECORDING THERMOMETERS ON MECHANICAL CLEANING SYSTEMS

Location: Temperature sensor in the return solution line downstream from process.

Case: Moistureproof under operation conditions.

Scale: Shall have a range from 16° C to 83° C (60° F to 180° F), with extensions of scale on either side permissible and graduated in time-scale divisions of not more than 15 minutes. Above 44° C (110° F), the chart is to be graduated in temperature divisions of not more than 1° C (2° F), spaced not less than 1.6 millimeters (0.0625 of an inch) apart. Provided, that temperature-scale divisions of 1° C (2° F), spaced not less than 1 millimeter (0.040 of an inch) apart, are permitted when the ink line is thin enough to be easily distinguished from the printed line.

Temperature Accuracy: Within 1° C (2° F), plus or minus, above 44° C (110° F).

Pen-Arm Setting Device: Easily accessible; simple to adjust.

Pen and Chart Paper: Designed to make a line not over .635 millimeter (0.025 of an inch) wide; easy to maintain.

Temperature Sensor: Protected against damage at 100° C (212° F).

Stem Fitting: Pressure-tight seat against inside wall of pipe; no threads exposed to solution.

Chart Speed: Circular charts shall make one revolution in not more than 24 hours. Strip charts shall not move less than 25 millimeters (1 inch per hour). More than one record of the cleaning operation shall not overlap on the same section of the chart for either circular- or strip-type charts.

INDICATING THERMOMETERS USED IN REFRIGERATED ROOMS.

Indicating thermometers used in refrigerated rooms, where milk and milk products are stored, shall meet the following specifications:

Scale Range: Shall have a span not less than 28 Celsius degrees (50 Fahrenheit degrees), including normal storage temperatures, plus and minus 3° C (5° F), with extensions of scale on either side permitted if graduated in not more than 1° C (2° F) divisions.

Temperature Scale Divisions: Spaced not less than 1.6 millimeter (0.0625 of an inch) apart between 0° C and 13° C (32° F and 55° F).

Accuracy: Within 1° C (2° F), plus or minus, throughout the specified scale ranges.

V. CRITERIA FOR THE EVALUATION OF COMPUTERIZED SYSTEMS FOR GRADE 'A' PUBLIC HEALTH CONTROLS

BACKGROUND

Computers are different from hard-wired controls in three major categories. To provide adequate public health protection, the design of computerized public health controls must address these three major differences.

First, unlike conventional hard-wired systems, which provide full-time monitoring of the public health controls, the computer performs its tasks sequentially, and the computer may be in real time contact with the flow-diversion device for only one millisecond. During the next 100 milliseconds (or however long it takes the computer to cycle one time through its tasks), the flow-diversion device remains in forward flow, independent of temperature in the holding tube. Normally, this is not a problem, because most computers can cycle through 100 steps in their program, many times during one second. The problem occurs when the public health computer is directed away from its tasks by another computer, or the computer program is changed, or a seldom used JUMP, BRANCH, or GOTO Instruction diverts the computer away from its public health control tasks.

Second, in a computerized system, the control logic is easily changed because the computer program is easily changed. A few keystrokes at the keyboard will completely change the control logic of the computer program. Conversely, hard-wired systems required tools and a technician to make wiring changes. Once the hard-wired system was properly installed and working, it was never changed. This problem can be solved by sealing the access to the computer, but some procedure is needed to ensure that the computer has the correct program when the computer is resealed by the public health authority.

Finally, some computer experts have stated categorically that no computer program can be written error-free. They were referring primarily to very large programs, with many conditional jumps and branches, with thousands of lines of program code. For these large systems, the programs actually improve with age (the errors are found and corrected under actual conditions of use). For public health controls, the computer program must and can be made error-free, since the programs required for public health control are relatively brief.

GLOSSARY

Address: A numerical label on each memory location of the computer. The computer uses this address when communicating with the input or output.

Computer: A very large number of on-off switches arranged in a manner to sequentially perform logical and numerical functions.

Default mode: The pre-described position of some memory locations during start-up and standby operations.

EAPROM: An **E**lectrically **A**lterable, **P**rogrammable, **R**ead-**O**nly **M**emory. Individual memory locations may be altered without erasing the remaining memory.

EEPROM: An **E**lectrically **E**rasable **P**rogrammable, **R**ead-**O**nly **M**emory. The entire memory is erased with one electrical signal.

EPROM: An **E**rasable, **P**rogrammable, **R**ead-**O**nly **M**emory. The entire memory is erased by exposure to ultra-violet light.

Fail safe: Design considerations that cause the instrument or system to move to the safe position upon failure of electricity, air, or other support systems.

Field alterable: A devise having a specific design or function that is readily changed by user and/or maintenance personnel.

Force off: A programmable computer instruction that places any input or output in the "off" state, independently of any other program instructions.

Force on: A programmable computer instruction that places any input or output in the "on" state, independently of any other program instructions.

Input: Electrical signals applied to the computer that are used by the computer to make logical decisions on whether or not to activate one or more outputs. Input consists of data from temperature and pressure instruments, liquid level controls, microswitches, and operator-controlled panel switches.

Input/Output Terminals: An electrical panel that provides for the connection of all inputs and outputs to the computer. The input/output address labels are found on this panel. Indicator lights showing the status (on/off) of all inputs and outputs may be available on this panel.

Last state switch: A manually operated switch or software setting that instructs the computer to place all outputs in the "on", "off", or "last state" condition during a start-up. The "last state" position instructs the computer to place the outputs in whatever state (on or off) occurred during the last loss of power.

Operator override switch: A manually operated switch that permits the operator to place any input or output in the on or off position, independently or any program instructions.

Output: Electrical signals from the computer that turn on or off: valves, motors, lights, horns, and other devises being controlled by the computer. Outputs may also consist of messages and data to the operator.

Programmable controller: A computer, with only limited mathematical ability, that is used to control industrial machines, instruments and processes. Most computers used on HTST pasteurizers will be programmable controllers.

RAM: Random **A**ccess **M**emory. Memory used by the computer to run programs, store data, read input and control outputs. The computer may either read data from the memory or write data into the memory.

ROM: Read-**O**nly **M**emory. A memory used by the computer to run its own internal unchangeable programs. The computer may only read from the memory; it cannot write into the memory or alter the memory in any way.

Standby status: The computer is turned on, running, and waiting for instructions to start processing input data. This instruction is usually accomplished by a manually-operated switch.

Status printing: Some computers are programmed to interrupt printing of the chart record and print the status of key set points and conditions such as: cold milk

temperature, holding tube temperature, diversion temperature setting and chart speed.

CRITERIA:

The following listed criteria shall be complied with for all computers or programmable controllers when applied to HTST, HHST and UHT pasteurization systems used for Grade 'A' milk and milk products. In addition, all systems shall conform to all other existing requirements of the Grade 'A' Pasteurized Milk ordinance.

1. A computer or programmable controller used for public health control of Grade 'A' pasteurizers must be a system dedicated only to the public health control of the pasteurizer. The public health computer shall have no other assignments involving the routine operation of the plant.

2. The public health computer and its outputs shall not be under the command or control of any other computer system. It shall not have an address to be addressable by any other computer system. A host computer cannot override its commands or place it on standby status. All addresses of the public health computer must be ready to process data at any time.

3. A separate public health computer must be used on each pasteurizing system.

4. The status of the inputs and outputs of the public health computer may be provided as inputs-only, to other computer systems. The wiring connections must be provided with isolation protection such as relays, diodes, or optical-coupling devises to prevent the public health outputs from being driven by the other computer system. Digital outputs from an other computer may be connected to an input of the public health computer in order to request operation of a device controlled by the public health computer.

5. On loss of power to the computer, all public health controls must assume the fail-safe position. Most computers can be placed in standby status by either a program instruction or manual switches. When the computer is in standby status, all public health controls must assume the fail-safe position. Some computers have internal diagnostic checks that are performed automatically during start-up. During this time, the computer places all outputs in default mode. In this default mode, all public health controls must be in the fail-safe position.

6. Some computers or programmable controllers have Input/Output buses with "last state switches" that permit the operator to decide what state the output bus will take on power-up after a shutdown or loss of power. The choices are on, off, or "last state" occurring when the computer lost power. These "last state switches" must be placed in the fail-safe position.

7. The computer performs its tasks sequentially, and for most of real time, the computer outputs are locked in the ON or OFF position, while waiting for the computer to

come back through the cycle. Consequently, the computer program must be written so that the computer monitors all inputs, and updates all outputs on a precise schedule - at least once every second. Most computers will be capable of performing this function many times in one second.

8. Programs must be stored in some form of read-only memory, and be available when the computer is turned on. Tapes or disks are not acceptable.

9. The computer program access must be sealed. Any telephone modem accesses must also be sealed. If the Input/Output Terminals contain "last state switches", the Input/Output Terminals must be sealed. The vendor must supply the Regulatory Official with procedures and instructions to confirm that the program currently in use by the computer is the correct program. The Regulatory Official will use this test procedure to confirm that the correct program is in use, during a start-up, and whenever the seal is broken.

10. If the computer contains FORCE-ON, FORCE-OFF functions, the computer must provide indicator lights showing the status of the FORCE-ON, FORCE-OFF function. The Vendor instructions must remind the Regulatory Official that all FORCE-ON, FORCE-OFF functions must be cleared before the computer is sealed.

11. The Input/Output Terminals of the public health computer shall contain no operator override switches.

12. Computerized systems which provide for printing the recording chart by the computer must ensure that proper calibration is maintained. During chart printing, the computer must not be diverted from its public health tasks for more than one second. Upon returning to public health control, the computer shall complete at least one full cycle of its public health tasks before returning to chart printing.

13. When printing a chart, some systems provide status reports on the chart paper of selected Input/Output conditions. This is usually done by interrupting the printing of the chart and printing the Input/Output conditions. Such interrupts, for status printing, are permitted only when a continuous record is recorded on the chart. When an interrupt is started, the time of the start of the interrupt will be printed on the chart at the beginning of the interrupt and at the end of the interrupt. The time interval during which the computer is diverted from its public health control tasks for status printing shall not exceed one second. Upon returning to public health control, the computer shall complete at least one full cycle of its public health tasks before returning to status printing.

14. When the computer prints the temperature trace of temperature in the holding tube, at specific intervals, rather than a continuously changing line, temperature readings shall be printed not less than once every five seconds, except that

during the thermometric lag test, the temperature shall be printed or indicated fast enough that the Regulatory Official can place the temperature sensor in a bath at a temperature 7EF above the diversion setting and accurately determine the point in time when the temperature rises to a point 12EF below the diversion point setting so that the Regulatory Official can start the timing of the thermometric lag test.

15. When the computer prints the frequency pen position (the position of the flow-diversion device, forward or divert) at specific intervals, rather than continuously, all changes of position shall be recognized by the computer and printed on the chart. In addition, the frequency pen position and temperature in the holding tube must be printed on the chart in a manner that the temperature in the holding tube can be determined at the moment of a change of position of the flow-diversion device.

16. The vendor shall provide a built-in program for test procedures, or a protocol shall be provided so that all applicable public health tests of Appendix I for each instrument can be performed by the Regulatory Official; i.e.
Recording thermometers: temperature accuracy, time accuracy, check against indicating thermometer, thermometric response; Flow-diversion Devices: valve seat leakage, operation of valve stem(s), device assembly, manual diversion, response time, time delay intervals if used;
Booster Pumps: proper wiring, proper pressure control settings; Flow Promoting Devises of Public Health Significance Capable of Generating Flow Through the Holding Tube: holding time in holder, proper wiring interlocks.

17. Computers require high quality (clean) well regulated power supplies to operate reliably and safely. Spurious voltage spikes can cause unwanted changes in computer random access memory (RAM). Some mechanical and electrical components also deteriorate with age. One solution is to have two permanent programs in the computer; one in RAM and one in read-only memory (ROM). Through a self-diagnostic test, these two programs could be compared routinely. If there were differences in the programs, the computer would go into default mode. Another solution would be to down-load the program from ROM to RAM at every start-up. A third solution would be to have the computer read program directly from ROM, that is unchangeable. However, this approach is practical only in large volume applications such as microwave ovens. For most small volume applications, the read-only memories are field alterable, such as erasable, programmable read-only memories (EPROMS), electrically erasable, programmable, read-only memories (EEPROMS) and electrically alterable, programmable read-only memories (EAPROMS). EPROMS, EEPROMS, and EAPROMS cannot be relied upon to maintain a permanent record. Something is needed to ensure that

the proper program is in computer memory when the Regulatory Official seals the computer.

18. Computer programs used for Public Health Controls on Grade 'A' Pasteurizers must conform to the attached logic diagrams. Minor modifications to these diagrams are permissible to accommodate or delete items that are unique to a specific HTST Pasteurizer system such as; magnetic flow meters used as replacement for timing pump, the flush cycle on the detect stem of the flow-diversion device, and the ten minute delay of booster pump and flow-diversion device that permits the timing pump to run during cleaning operations. The vendor must provide a protocol in the user's manual so that the installer, user, and/or Regulatory Official can demonstrate that the program performs as designed under actual production conditions. *Similar appropriate logic flow should be followed for HHST and aseptic processing systems based on modifying these diagrams as needed.*

19. The logic diagrams for the flow-diversion device and booster pump show a programmed mechanical cleaning cycle operation as part of the computerized system. Some plant operators may wish to use another computer for mechanical cleaning operations, so that mechanical cleaning programs may be changed by plant personnel, as needed to achieve good plant sanitation. When this is done, the connections between the flow-diversion device, booster pump, and plant computer, must be provided with solenoid relays or similar devices on the outputs to the flow-diversion device and booster pump to prevent them from being operated by the plant computer, except when the mode switch of the flow-diversion device is in the "CIP" position.

DIAGRAM LEGEND

t = *Time*
T = *Temperature*
MS = *Microswitch*
FDV = *Flow Divert Valve*
FDD = *Flow-diversion Device*

References

Dill, R.S., A Test Method for Air Filters. Transactions of the American Society of Heating and Ventilation Engineers. 44:379, 1938.

DOP-Smoke Penetration and Air Resistance of Filters. Military Standard No. 282. Section 102.9.l. Naval supply Depot. 5801 Tabor Avenue, Philadelphia, Pennsylvania 19120.

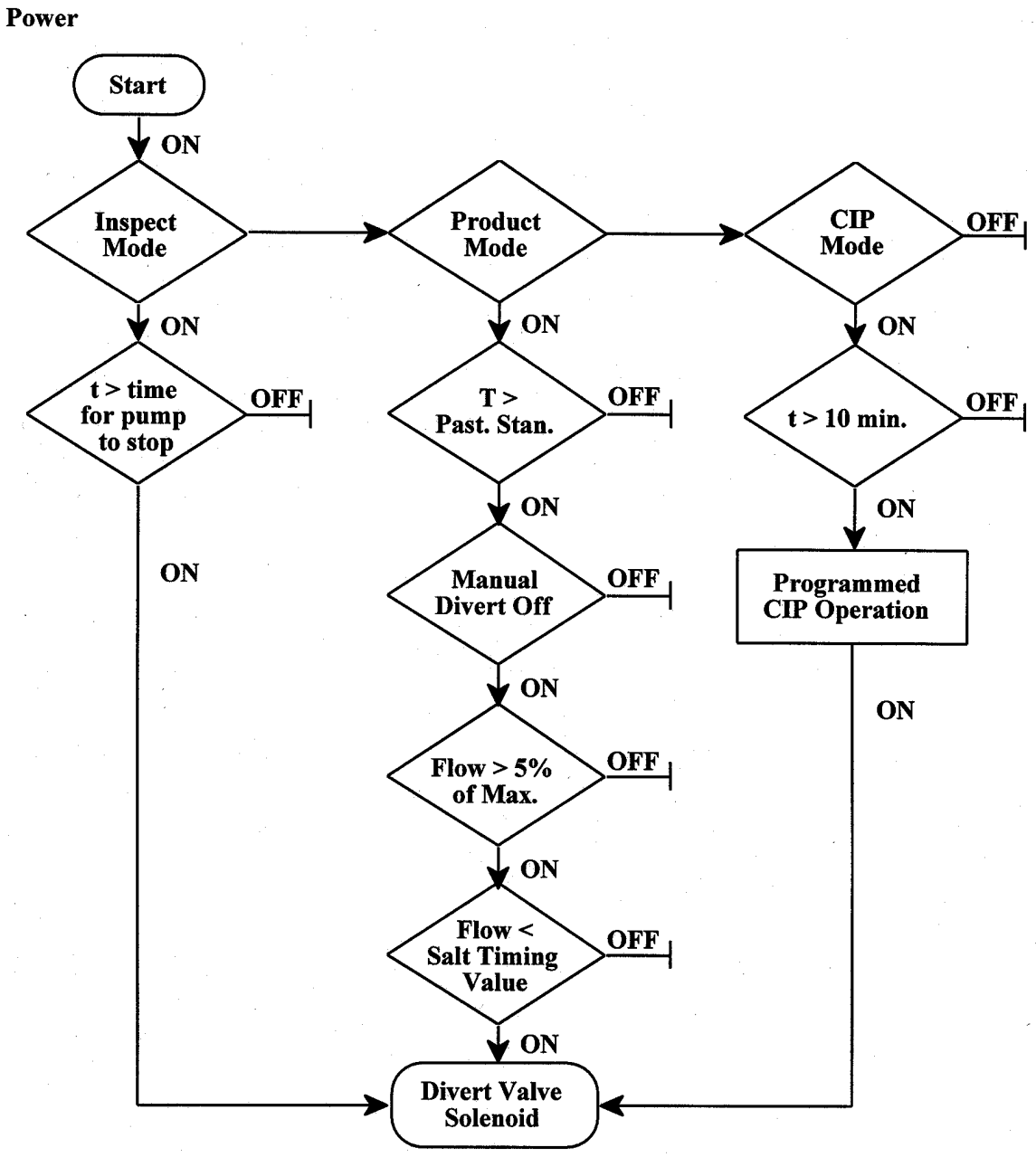

Figure 40. Logic Diagram, Flow-diversion Device, Divert Valve Stem

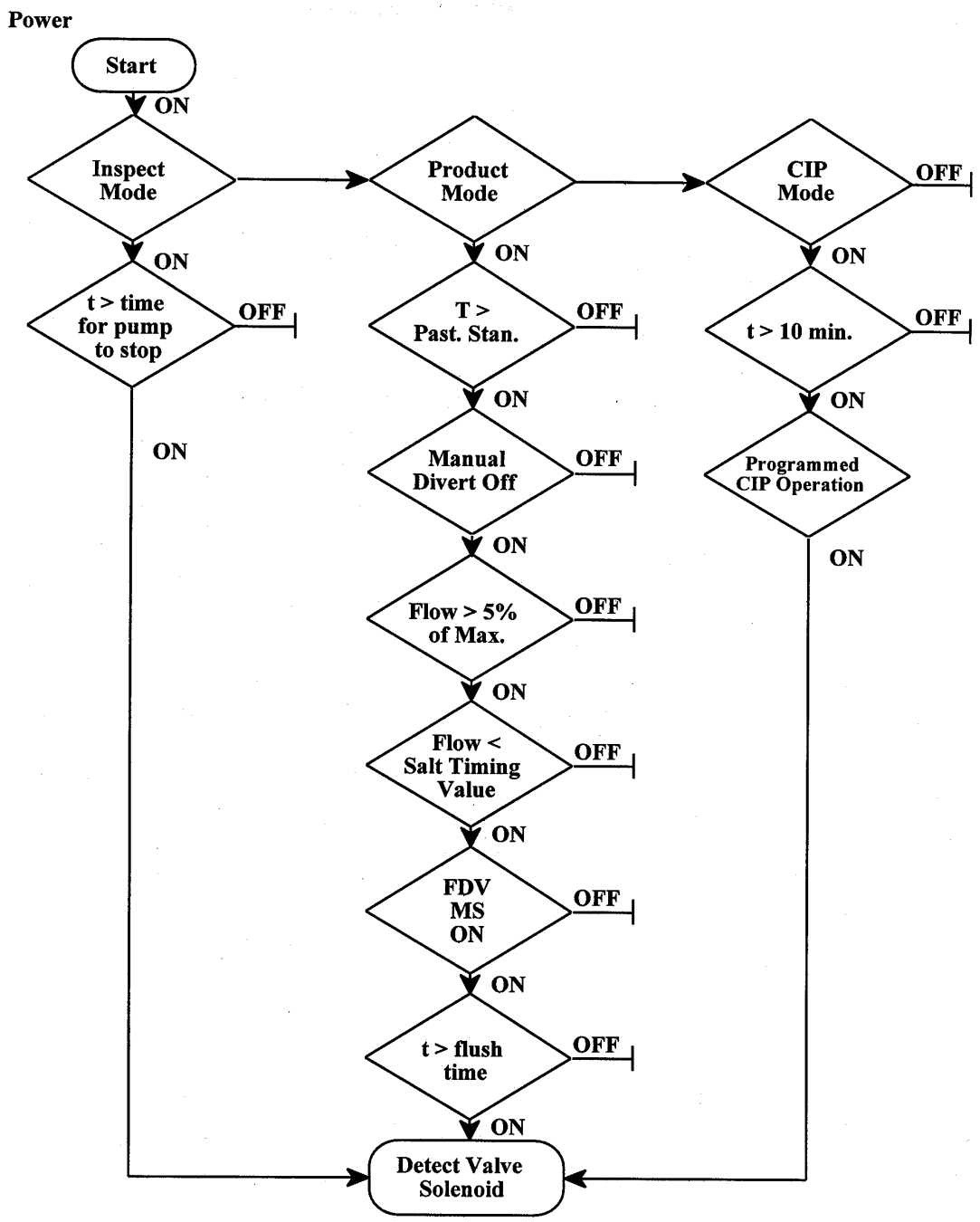

Figure 41. Logic Diagram, Flow-diversion Device, Leak Detect Valve Stem

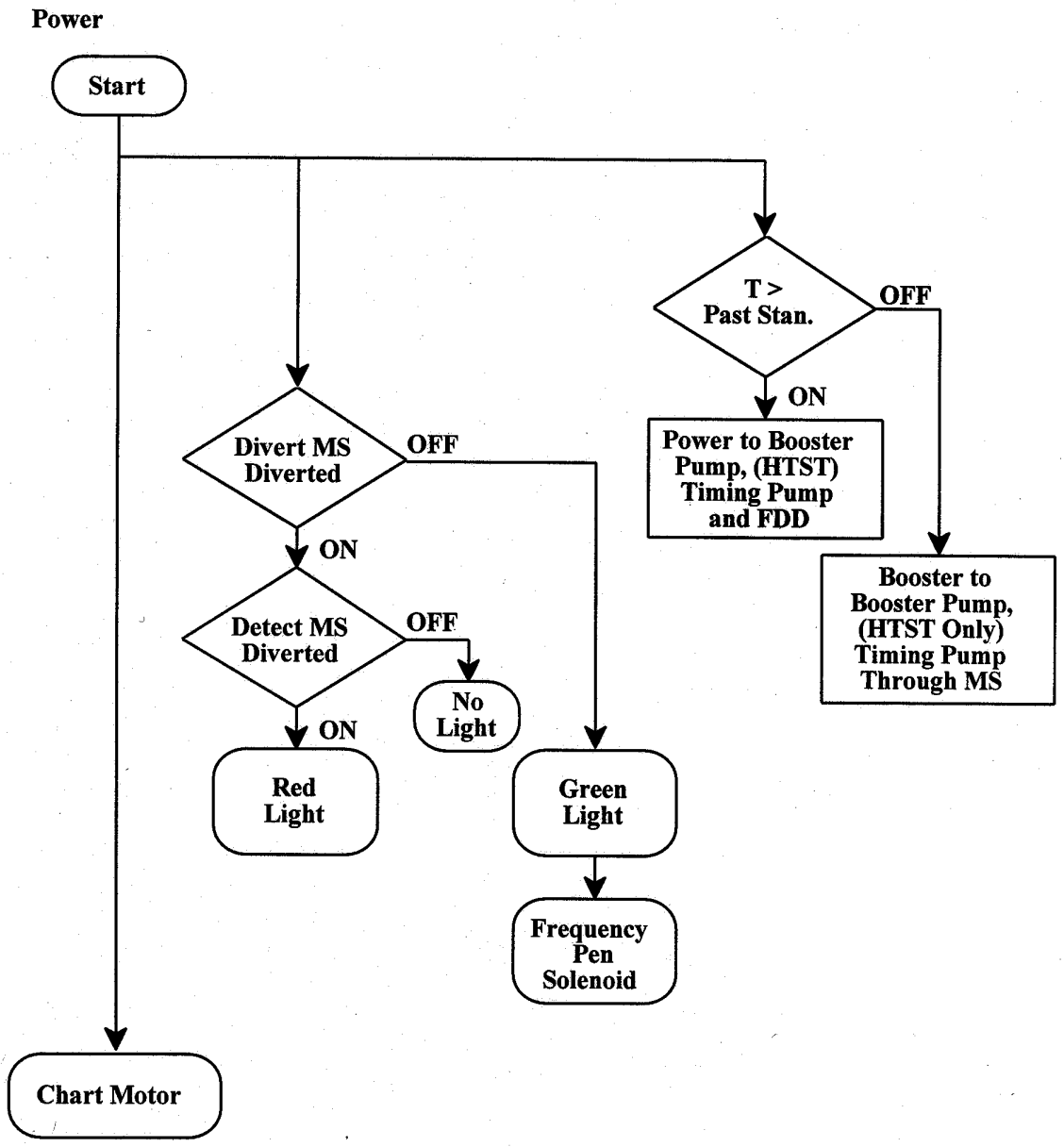

Figure 42. Logic Diagram, Safety Thermal Limit Recorder-Controller

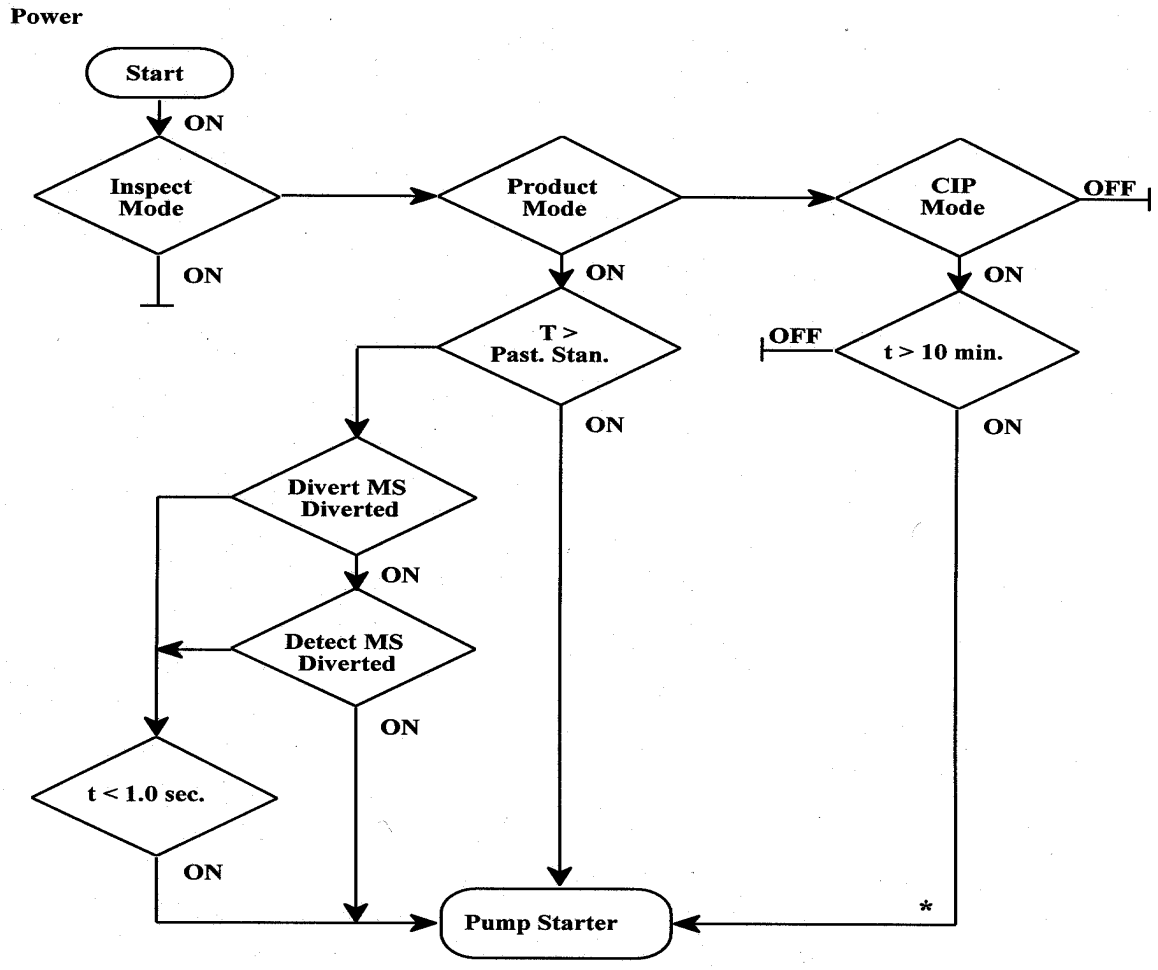

*** If the 10 min. time delay is not used when CIP is initiated, this path must be deleted.**

Figure 43. Logic Diagram, Timing Pump

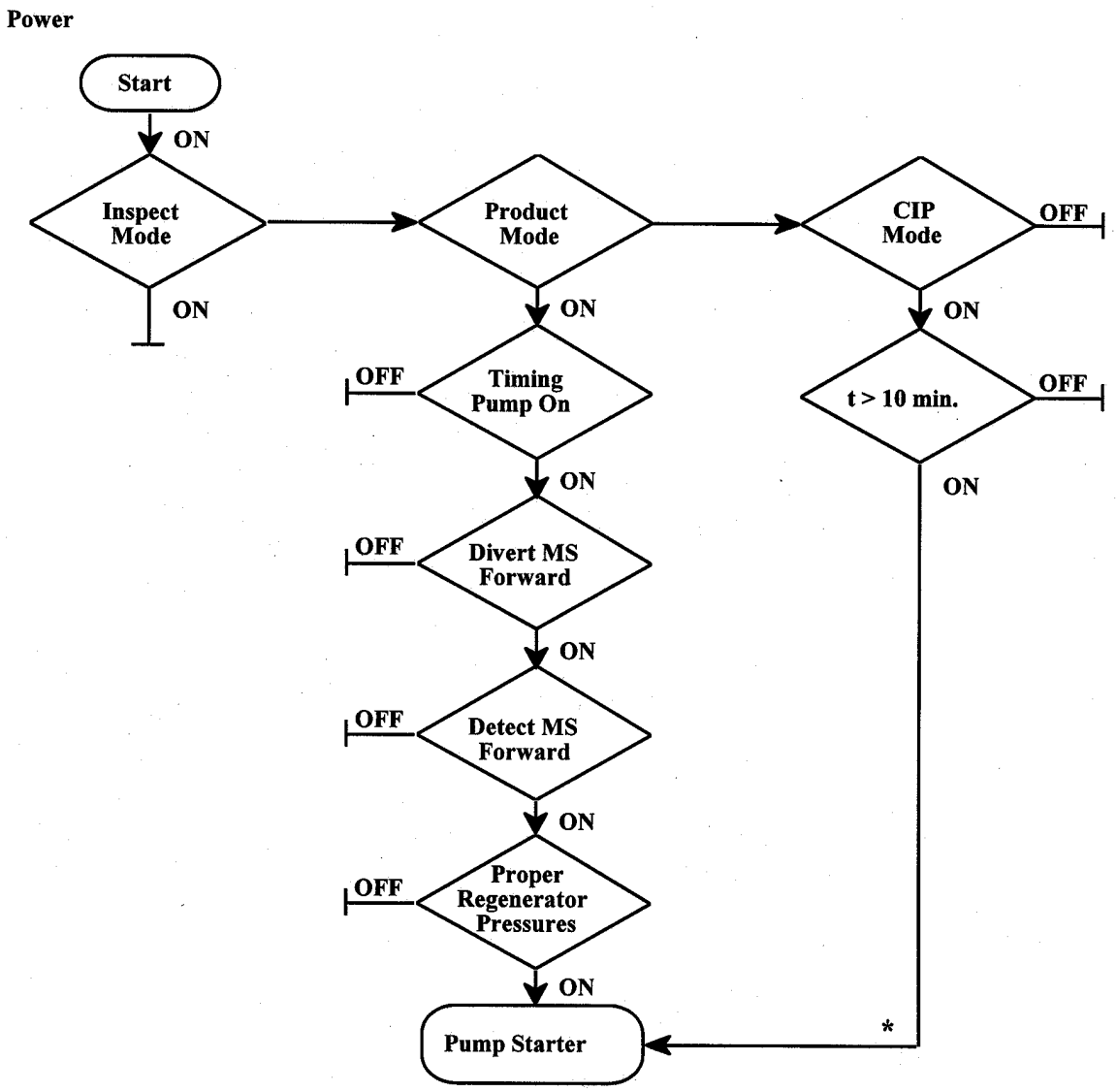

*** If the 10 min. time delay is not used when CIP is initiated, this path must be deleted.**

Figure 44. Logic Diagram, Booster Pump

APPENDIX I. PASTEURIZATION EQUIPMENT AND CONTROLS--TESTS

I. TESTING APPARATUS SPECIFICATIONS

TEST THERMOMETER

Type: Mercury-actuated; readily cleanable; plain front, enameled back; length 305 millimeters (12 inches); immersion point to be etched on stem; mercury to stand in contraction chamber at 0°C (32°F).

Scale Range: At least 7°C (12°F) below and 7°C (12°F) above the pasteurization temperature at which the operating thermometer is used, with extensions of scale on either side permitted; protected against damage at 149°C (300°F).

Temperature Represented by Smallest Scale Division: 0.1°C (0.2°F).

Number of Degrees per 25 Millimeters (Inch) of Scale: Not more than 4 Celsius degrees or not more than 6 Fahrenheit degrees.

Accuracy: Within 0.1°C (0.2°F), plus or minus, throughout specified scale range. The accuracy shall be checked against a thermometer which has been tested by the National Institute of Standards and Technology.

Bulb: Corning normal or equally suitable thermometric glass.

Case: Suitable to provide protection during transit and periods when not in use.

GENERAL PURPOSE THERMOMETER

Type: Pocket type

Scale Range: 1°C (30°F) to 100°C (212°F), with extension on either side permitted. Protected against damage at 105°C (220°F).

Temperature Represented by Smallest Scale Division: 1°C (2°F).

Accuracy: Within 1°C (2°F), plus or minus, throughout the specified scale range. Checked periodically against a known accurate thermometer.

In the case of mercury actuated general purpose thermometers, the following additional specifications shall apply:

Magnification of Mercury Column: To apparent width of not less than 1.6 millimeter (0.0625 of an inch).

Number of Degrees per Inch of Scale: Not more than 29 Celsius degrees or not more than 52 Fahrenheit degrees.

Case: Metal, provided with a fountain pen clip.

Bulb: Corning normal or equally suitable thermometric glass.

ELECTRICAL CONDUCTIVITY MEASURING DEVICES

Type Manual or automatic.

Conductivity: Capable of detecting change produced by the addition of 10 ppm of sodium chloride, in water of 100 ppm of hardness.

Electrodes: Standard.

Automatic Instruments: Electric clock, time divisions not over 0.2 of a second.

STOPWATCH

Type: Open face, indicating fractional seconds.

Accuracy: Accurate to 0.2 of a second.

Hands: Sweep hand (if applicable), one complete turn every 60 seconds or less.

Scale: Divisions of not over 0.2 of a second.

Crown: Depression of crown or push button starts, stops and resets to zero.

II. TEST PROCEDURES

Equipment and field tests to be performed by the regulatory agency are listed and suitably referenced below. The results of tests shall be recorded on suitable forms (See Appendix M) and filed as the regulatory agency shall direct.

TEST 1
INDICATING THERMOMETERS-- TEMPERATURE ACCURACY

Reference: Item 16p(E).

Application: To all indicating thermometers used for measurement of product temperature during pasteurization or aseptic processing, including airspace thermometers.

Frequency: Upon installation and once each 3 months thereafter or whenever the thermometer has been replaced or the regulatory seal on a digital sensor or the digital control box has been broken.

Criteria: Within 0.25^{o} C (0.5^{o} F) for pasteurization and aseptic processing thermometers and 0.5^{o} C (1° F) for airspace thermometers, plus or minus, in a specified scale range. Provided, that on batch pasteurizers used solely for 30-minute pasteurization of products at temperatures above 71° C (160° F), indicating thermometers shall be accurate to within 0.5° C (1° F) plus or minus.

Apparatus:

a. Test thermometer meeting specifications under Appendix I, Part 1.

b. Water or oil bath and agitator.

c. Suitable means of heating water or oil bath.

Method: Both thermometers exposed to a water or oil medium of uniform temperature. Indicating thermometer reading is compared to the reading of the test thermometer.

Procedure:

a. Prepare a quantity of water in a water bath, or a quantity of oil in an oil bath, or a quantity of other suitable heating media, by raising the temperature of the water, oil or other

suitable heating media to within a range of 2°C (3°F) of the appropriate pasteurization or airspace temperature, or aseptic processing temperature.

b. Stabilize the bath temperature and agitate water or oil bath rapidly.

c. Continue agitation. Insert indicating and test thermometers to indicated immersion point during the test.

d. Compare both thermometer readings at the temperature within the test range.

e. Repeat comparison of readings.

f. Record thermometer readings, and thermometer identification or location.

g. Install seals as appropriate on sensors and control boxes of digital thermometers.

Corrective Action: Do not run test if mercury column has been split or capillary tube is broken, as thermometer should be returned to the factory for repair. When the indicating thermometer differs from the test thermometer by more than 0.25°C (0.5°F) and the airspace thermometer by more than 0.5°C (1°F), the indicating thermometer should be adjusted to agree with the test thermometer. Retest the thermometer after adjustment.

TEST 2.
RECORDING THERMOMETERS--TEMPERATURE ACCURACY.

Reference: Item 16p(E).

Application: To all recording and recorder/controller thermometers used to record milk temperatures during pasteurization or aseptic processing.

Frequency: Upon installation, at least once each 3 months and whenever the recording pen-arm setting requires frequent adjustment, when sensing element has been replaced, or when a regulatory seal has been broken.

Criteria: Within 0.5° C (1° F), plus or minus, in specified scale range. Provided, that on batch pasteurizers used solely for 30-minute pasteurization of products at temperatures above 71° C (160° F), recording thermometers shall be accurate to within 1° C (2° F), plus or minus, between 71° C and 77°C (160° F and 170° F).

Apparatus: Pasteurizer or aseptic processor indicating thermometer previously tested against a known accurate thermometer, water baths or suitable vats or containers, agitator, suitable means of heating water baths and ice.

Note: When this test is performed on recorder/controllers, used with HHST pasteurization or aseptic processing systems operation at or above the boiling point of water, an oil bath shall be substituted for the processing (operating) temperature water mentioned in steps 1,4,5,6, and 7 as well as the boiling water mentioned in steps 2, 3 and 5. The temperature of the oil bath which is used in place of the boiling water shall be above the normal operating range but below the highest temperature division on the chart.

Method: The testing of a recording thermometer for temperature accuracy involves the determination of whether or not the temperature pen-arm will return to within 0.5°C (1°F), or 1° C (2° F) as provided above, of its previous setting, after exposure to high heat and melting ice .

Procedure:

a. Adjust the recording pen to read exactly as the previously tested indicating thermometer, in the temperature range for the process being used after a stabilization period of 5 minutes (two minutes for electronic recording thermometers) at a constant temperature. The bath shall be rapidly agitated throughout the stabilization period.

b. Prepare one water bath by heating to the boiling point and maintain temperature. Prepare a second container with melting ice. Place water baths within working distance of the recorder sensing element.

c. Immerse the sensing element of the recorder in boiling water for not less than 5 minutes (two minutes for electronic recording thermometers).

d. Remove the sensing element from the boiling water and immerse in water at a temperature within the testing range for the process being used. Allow a 5-minute (two minutes for electronic recording thermometers) stabilization period for both indicating and recording thermometers. Compare readings of the indicating and recording thermometers. The recorder reading should be within 0.5°C (1°F) or 1° C (2° F) as provided above, plus or minus, of the indicator thermometer reading.

e. Remove sensing element from the bath, at operating temperatures, and immerse in melting ice for not less than 5 minutes (two minutes for electronic recording thermometers).

f. Remove sensing element from the ice water and immerse in water at a temperature, within the testing range, for the process being used. Allow a 5-minute (two minutes for electronic recording thermometers) stabilization period for both indicating and recording thermometers. Compare readings of the indicating and recording thermometers. The recorder reading should be within 0.5°C (1°F), or 1° C (2° F) as provided above, plus or minus, of the indicator thermometer reading.

g. Re-seal regulatory controls as necessary and record the indicator and recording thermometer readings obtained at steps 1, 4, and 6.

Corrective Action: If the pen does not return to 0.5°C (1°F), or 1° C (2 F) as provided above, plus or minus, of indicating thermometer reading at steps 4 and 6, the recording thermometer should be repaired.

TEST 3.
RECORDING THERMOMETERS--
TIME ACCURACY

Reference: Item 16p(E).

Application: To all recording and recorder/controller thermometers used to record time of pasteurization or aseptic processing (including those used t record flow rate in magnetic flow meter based timing systems).

Frequency: Upon installation and at least once each 3 months thereafter, or whenever the seal of a programmable recorder/controller has been broken.

Criteria: The recorded time of pasteurization or aseptic processing shall not exceed the true elapsed time.

Apparatus:

a. A watch, graduated at intervals not to exceed 1 minute, and accurate to within 5 minutes in 24 hours.

b. A pair of dividers, or any other suitable device for measuring short distances.

Method: Comparison of the recorded time over a period of not less than 30 minutes with a watch of known accuracy. For recorders utilizing electric clocks, check the cycle on the face plate of clock with a known cycle; observe that the clock is in operating condition.

Procedure:

a. Determine if chart is appropriate to recorder. Insure that the recording pen is aligned with the time arc of the chart at both the center and the outside edge.

b. Inscribe reference mark at the pen point on the recorder chart and record the time.

c. At the end of 30 minutes by the watch, inscribe a second reference mark at the pen point position on the chart.

d. Determine the distance between the two reference marks and compare the distance with the time-scale divisions on the record chart at the same temperature.

e. For electric clocks, remove face plate, compare cycle specification on face plate with the current cycle utilized.

f. Re-seal regulatory controls as necessary and enter finding on chart and initial and record results.

Corrective Action: If recorded time is incorrect, the clock should be adjusted or repaired.

TEST 4.
RECORDING THERMOMETERS--CHECK AGAINST INDICATING THERMOMETERS

Reference: Item 16p(D).

Application: To all recording and recording/controller thermometers used to record product temperatures during pasteurization or aseptic processing.

Frequency: At least once each 3 months by regulatory agency; daily by plant operator.

Criteria: Recording thermometer shall not read higher than corresponding indicating thermometer.

Apparatus: No supplementary materials required.

Method: This test requires only that the reading of the recording thermometer be compared with that of the indicating thermometer at a time when both are exposed to a stabilized pasteurization or aseptic processing temperature.

Procedure:

a. While the indicating and recording thermometers are stabilized at the same acceptable pasteurization or aseptic processing temperature, read indicating thermometer.

b. Immediately inscribe on the recording thermometer chart a line intersecting the recorded temperature arc at the pen location, record on the chart the indicating thermometer temperature and initial.

c. Record the indicating and thermometer readings.

Corrective Action: If recording thermometer reads higher than indicating thermometer, the pen should be adjusted by the operator.

TEST 5. FLOW-DIVERSION DEVICE-- PROPER ASSEMBLY AND FUNCTION

Reference: Item 16p(E).

Application: Test 5 (parts 1 through 9) does not apply to aseptic processing divert systems, valves or other acceptable controls which may be used in place of a flow-diversion device. Parts 1 to 4 and 6 to 8 apply to all flow-diversion devices used with continuous-flow pasteurizers parts 5 and 9 apply only flow-diversion devices used with HTST pasteurizers.

Frequency: Upon installation and at least once each 3 months thereafter, or when a regulatory seal has been broken.

Criteria: The flow-diversion device shall function correctly in operating situations and shall de-energize the metering pump and all other flow promoting devices capable of causing flow through the holding tube in the event of malfunction or incorrect assembly.

5.1 LEAKAGE PAST VALVE SEAT(S)

Apparatus: For single stem flow-diversion devices, suitable tools for the disassembly of flow-diversion device and sanitary piping. None for dual stem flow-diversion devices.

Method: Observe the valve seat(s) of the flow-diversion device for leakage.

Procedure.—
With the system operating with water, place the flow-diversion device in diverted-flow position:

In the case of single stem flow-diversion devices disconnect the forward flow piping and observe the valve seat for leakage. Check leak escape ports to see if they are open.

In the case of dual stem flow-diversion devices, observe the leak detect line discharge or sight glass for leakage.

Corrective Action: If leakage is noted, device must be dismantled and defective gaskets replaced or other suitable repairs made.

5.2 OPERATION OF VALVE STEM(S)

Apparatus: Suitable tools for tightening the packing nut on the stem(s).

Method: Observe flow-diversion device valve stem(s) for ease of movement.

Procedure.—
When a stem packing nut is used, tighten stem packing nut as much as possible. Operate system at maximum normal operating pressure and place device in forward and diverted flow several times. Note freedom of action of valve stem.

Corrective Action: If valve action is sluggish, suitable adjustment or repair shall be made to permit stem to act freely in

all positions, with packing nut, when used fully tightened.

5.3 DEVICE ASSEMBLY--SINGLE STEM DEVICE

Apparatus: Sanitary fitting wrench.

Method: During diverted flow, by temperature, observe function of metering pump and all other flow promoting devices capable of causing flow through the holding tube when flow-diversion device is improperly assembled.

Procedure:

a. With system in operation below the required process temperature, unscrew by one-half turn, the 13H hex nut which holds the top of the valve to the valve body. This should de-energize the metering pump and all other flow promoting devices capable of causing flow through the holding tube. This test should be run with no piping connected to the forward flow port of the device since there can be sufficient force from the piping to keep the forward flow port tightly clamped even though the hex nut is loosened. Re-tighten the 13H hex nut.

b. With the HTST system in operation below the required process temperature, remove the connecting key located at the base of the valve stem. The metering pump and all other flow promoting devices capable of causing flow through the holding tube should be de-energized.

c. Re-seal regulatory controls as necessary and attempt to restart the metering pump and each flow promoting device capable of causing flow through the holding tube. None of these flow promoting devices should start or operate.

Corrective Action: If any flow promoting device fails to respond as indicated, immediate checks of the device assembly and wiring are required to locate and correct the cause.

5.4 DEVICE ASSEMBLY, DUAL STEM DEVICE

NOTE: The test procedure presented in this section is typical of tests accepted by FDA for various specific types of flow-diversion devices. Testing details which may vary are provided in individual flow-diversion device operators manuals which have been reviewed by FDA and which are specified by part # in FDA identical memorandums. In each of these FDA accepted test methods if the words "metering pump" or "timing Pump" are used they shall be understood to mean "metering pump and all other flow promoting devices capable of causing flow through the holding tube".

Apparatus: None

Method: Observe function of metering pump and all other flow promoting devices capable of causing flow through the holding tube when flow-diversion device is improperly assembled.

Procedure:

a. With the device in diverted-flow, by temperature, when the flow-diversion device is properly assembled.

b. Move the device to the forward-flow position and disconnect stem from actuator.

c. Move the device to the diverted-flow position and turn on the metering pump and all other flow

promoting devices capable of causing flow through the holding tube. The metering pump and each of the other flow promoting devices must be de-energized and must not run. If any pump starts momentarily and then stops, it may indicate improper wiring of the one second time delay as allowed in 16p.B.2.b.10. Separators must be effectively valved out of the system.

d. Reassemble the device by moving it to the forward-flow position and reconnecting the stem to the actuator.

e. Re-seal regulatory controls as necessary and repeat the procedure for the other actuator.

Corrective Action: If any of the flow promoting devices fail to respond as indicated, an immediate check of the device assembly and wiring is required to locate and correct the cause.

5.5 MANUAL DIVERSION (when booster pump is installed in the HTST system)

Apparatus: None.

Method: Observe the response of the system to manual diversion.

Procedure:

a. With the HTST system in operation and the flow-diversion device in the forward-flow position, press the manual diversion button. This should (a) cause the valve to assume the divert position, and (b) de-energize the booster pump. The pressure differential between raw and pasteurized milk in the regenerator should be maintained.

b. Operate the HTST system in forward flow and activate the manual divert button until the raw pressure reaches zero (0) psi. Deactivate the manual divert button and observe the raw milk and pasteurized milk pressures. The pressure differential between raw and pasteurized milk in the regenerator should be maintained. Re-seal regulatory controls as necessary.

Corrective Action: If the above described actions do not occur when procedures a and b are performed, or the necessary pressure differential between raw and pasteurized milk is not maintained, the assembly and wiring of the HTST system must be immediately reviewed and the indicated deficiencies corrected or proper adjustments made.

5.6 RESPONSE TIME

Apparatus: Temperature bath, stopwatch. The stopwatch should be used to determine that the response time interval does not exceed 1 second.

Method: Determine the elapsed time between the instant of the activation of the control mechanism at cut-out temperature on declining temperature and the instant the flow-diversion device takes the fully diverted-flow position.

Procedure:

a. With the water or oil bath at a temperature above cut-out temperature, allow the water or oil to cool gradually. At the moment the cut-out mechanism is activated, start the watch and the moment the flow-diversion device takes the fully-diverted position, stop the watch.

b. Re-seal regulatory controls as necessary and record results.

Corrective Action: Should response time exceed 1 second, immediate corrective action must be taken.

5.7 TIME DELAY INTERLOCK WITH METERING PUMP.

Application: To dual stem flow-diversion devices with a manual forward-flow switch.

Apparatus: None.

Method: Determine that the device does not assume a manually induced forward-flow position, while the metering pump or any other flow promoting device capable of causing flow through the holding tube is running.

Procedure: With the system running in forward flow, move the control switch to the "Inspect" position and observe that the following events automatically occur in sequence:

a. The device immediately moves to the diverted-flow position and the metering pump and all other flow promoting devices capable of causing flow through the holding tube are turned off or in the case of separators, are effectively valved out of the system

b. The device remains in the diverted-flow position while the metering pump and all other flow promoting devices capable of causing flow through the holding tube are running down or in the case of a separator, valving out.

c. After the metering pump stops turning, and all other flow promoting devices capable of causing flow through the holding tube have also stopped, or in the case of separators, have been effectively valved out of the system, the device assumes the forward-flow position.

d. Repeat the above procedure by moving the control switch to the cleaned-in-place (CIP) position.

e. Record test results and seal the control enclosure.

Corrective Action: If the above sequence of events does not occur, either a timer adjustment or wiring change is required.

5.8 CIP TIME DELAY RELAY

Application: To all continuous flow pasteurizer systems in which it is desired to run the timing pump and/or other flow promoting devices during the CIP cycle without the controls required during product processing.

Criteria: When the mode switch on the flow-diversion device is moved from process product to CIP, the flow-diversion device shall move immediately to the diverted position and remain in the diverted position for at least 10 minutes, with all controls and safe guards required in product mode functioning, before starting its normal cycling in the CIP mode. In HTST systems, the booster pump shall be turned off during the 10 minute time delay.

Apparatus: Stopwatch.

Method: Determine that the set point on the time delay relay is equal to or greater than 10 minutes.

.

Procedure:

a. Operate pasteurizer in forward flow, with the mode switch on the flow-diversion device in the process product position, using water above pasteurization temperature. In systems which are equipped with magnetic flow meter based timing systems, operate the system, at a flow rate below the Flow Alarm set point and above the Loss-of-Signal Alarm set point.

b. Move the mode switch on the flow-diversion device to the CIP position. The flow-diversion device should move immediately to the diverted position. Start the stopwatch when the flow-diversion device moves to the diverted position. Check all controls and safeguards which are required to be in operation when the system is in product mode and in diverted flow. For example, in HTST systems, the booster pump must stop running. Separators located between regenerator sections or on the pasteurized side of the system must be effectively valved out and stuffer pumps for such separators must be de-energized.

c. Stop the stopwatch when the CIP timer times out. On most systems this is when the flow-diversion device moves to the forward position for its initial cycle in the CIP mode. At this time the system may be operated without the controls and safe guards normally required during product processing. For example, the booster pump may start at this time.

d. Record results for the office record.

e. Install and seal enclosure over the time delay relay.

Corrective Action: If the flow-diversion device does not remain in the diverted position for at least 10 minutes after the mode switch is moved from process product to CIP, increase the set point on the time delay relay and repeat this test procedure. All safe guards and controls which are required to be in operation when the system is in product mode and in diverted flow must be functional during this 10 minutes. If any of these required safeguards or controls are not functional during this 10 minutes, adjustments or repairs are needed. In HTST systems, if the booster pump runs at any time during the 10 minute delay, the booster pump wiring is in need of repair.

5.9 LEAK DETECT VALVE FLUSH - TIME DELAY

Application: The minimum one second delay applies to HTST continuous flow pasteurizers in which space between the divert and detect valves is not self draining in the diverted flow position.

The maximum of five seconds for this delay is not applicable if:

a. The minimum acceptable holding time in diverted flow can be achieved without the use of a restriction in the divert line, or

b. The timing system is magnetic flow meter based.

Criteria: The leak detect valve will be flushed for at least one second and not more that five seconds after the divert valve moves to the forward flow position and before the detect valve moves to the forward position.

Apparatus: A stop watch.

Method: Observe the movement of the divert and detect valves to the forward flow position and measure the time interval between the movement of the two valves.

Procedure:

a. Move the flow-diversion device from the diverted flow position to the forward flow position either by raising the temperature above the cut in set point or by operating the HTST pasteurizer above the cut in temperature in manual divert mode and releasing the manual divert.

b. When the divert valve begins to move to the forward flow position, start the watch.

c. When the detect valve begins to move to the forward flow position, stop the watch.

d. Record the elapsed time.

e. If the elapsed time is at or above one second and at or below five seconds, seal the time delay.

Corrective Action: If the elapsed time is less than one second or greater than five seconds, appropriate changes to the system or system controls must be made.

TEST 6.
LEAK PROTECTOR VALVE

Reference: Item 16p(E).

Application: To all batch (vat) pasteurizer outlet valves and to all batch (vat) pasteurizer inlet valves which are not disconnected and removed during holding, cooling and emptying periods.

Frequency: Upon installation and at least once each 3 months thereafter.

Criteria: No leakage of milk past the valve seat in any closed position.

Apparatus: No supplementary materials required.

Method: By observing when the piping is disconnected from the valve outlet whether or not leakage past the valve seat occurs when pressure is exerted against the upstream face of the valve.

Procedure:

a. During normal operation, while milk pressure is exerted against the valve inlet, fully close the valve and disconnect the outlet piping.

(Caution: Care must be taken to avoid contamination of the valves or the piping.)

b. Observe whether or not any milk is leaking past the valve seat into the valve outlet.

c. In the case of plug-type valves, turn the valve to the just-closed position, and examine the leakage into the valve outlet.

d. Reconnect the outlet piping.

e. Record identity of the valve, and findings, for the office record.

Corrective Action: If leakage past the valve seat should occur in any closed position, the valve plug should be re-ground, gaskets replaced, springs replaced or other necessary steps be taken to prevent leakage.

TEST 7.
INDICATING THERMOMETERS ON PIPELINES-- THERMOMETRIC RESPONSE

Reference: Item 16p(E).

Application: To all HTST indicating thermometers located on pipelines and used for determination of milk temperatures during pasteurization.

Frequency: Upon installation and once each 3 months thereafter, and whenever the seal on a digital thermometer has been broken.

Criteria: Four seconds under specified conditions.

Apparatus: Stopwatch, water bath, agitator, heat supply and indicating thermometer from pasteurizer.

Method: By measuring the time required for the reading of the thermometer being tested to increase 7°C (12°F) through a specified temperature range (temperature range must include pasteurization temperature). The temperature used in the water bath will depend upon the scale range of the thermometer to be tested.

Procedure:

a. Immerse indicating thermometer in water bath heated to a temperature at least 11°C (19°F) higher than minimum scale reading on the indicating thermometer. Bath temperature should be 4°C (7°F) higher than maximum required pasteurization temperature for which thermometer is used.

b. Immerse indicating thermometer in bucket of cold water for several seconds to cool it.

Note: Continuous agitation of water baths during the performance of steps c, d and e is required. Elapsed time between end of step a and beginning of step c, should not exceed 15 seconds, unless a constant temperature bath is used, so the hot water bath does not cool significantly.

c. Insert indicating thermometer in hot water bath to proper bulb immersion depth.

d. Start stopwatch when indicating thermometer reads 11°C (19°F) below bath temperature.

e. Stop stopwatch when indicating thermometer reads 4°C (7°F) below bath temperature.

f. Record thermometric response time for office record.

Example: For a thermometer used at pasteurization temperature set points of 71.7°C (161°F) and 74.4°C (166°F), a water bath at a temperature of 78.3°C (173°F) could be used. 10.6°C (19°F) lower than 78.3°C (173°F) water bath would be 67.8°C (154°F); 3.9°C (7°F) lower than 78.3°C (173°F) water bath would be 74.4°C (166°F). Hence, after immersing the thermometer which has been previously cooled, in the 78.3°C (173°F) bath, the stopwatch is started when the thermometer reads 67.8°C (154°F) and stopped when it reads 74.3°C (166°F).

NOTE: The test included the pasteurization temperature set points of 71.7°C (161°F) and 74.4°C (166°F). If the pasteurization temperature set points had been 71.7°C (161°F) and 79.4°C (175°F), it would not have been possible to include both set points within a 6.7°C (12°F) span. With these set points the test would have to be done separately for each set point. .

Corrective Action: If the response time should exceed 4 seconds, the thermometer should be replaced or returned for repair.

TEST 8.
RECORDER/CONTROLLER--THERMOMETRIC RESPONSE

Reference: Item 16p(E).

Application: To all continuous-flow pasteurizers, except those in which the flow-diversion device is located at the end of the cooler section.

Frequency: Upon installation and at least once each 3 months thereafter.

Criteria: Five seconds, under specified conditions.

Apparatus: Previously tested indicating thermometer (on pasteurizers), stopwatch, water bath, agitator and heat supply.

Method: Measure the time interval between the instant when the recording thermometer reads 7°C (12°F) below the cut-in temperature and the moment of cut-in by the controller. This measurement is made when the sensing element is immersed in a rapidly agitated water bath maintained at 4°C (7°F) above the cut-in temperature.

Procedure:

a. Check and, if necessary, adjust the pen-arm setting of the recording thermometer in the proper reference to agree with the indicating thermometer reading at pasteurization temperature.

b. Determine the cut-in temperature of controller (Test 10), either while in normal operation or by using a water bath.

c. Remove sensing element and allow to cool to room temperature.

d. Heat water bath to 4°C (7°F) above the cut-in temperature while vigorously agitating bath to insure uniform temperature.

e. Immerse recorder/controller bulb in bath. Continue agitation during steps f. and g. below.

f. Start stopwatch when the recording thermometer reaches a temperature of 7°C (12°F) below the cut-in temperature.

g. Stop stopwatch when the controller cuts in.

h. Re-seal regulatory controls as necessary and record thermometric response time for office record.

Corrective Action: If the response time should exceed 5 seconds, the recorder/controller should be repaired.

TEST 9.
REGENERATOR PRESSURE CONTROLS

Reference: Item 16p(E).

9.1 PRESSURE SWITCHES: - Used to control operation of booster pumps.

Application: To all pressure switches controlling the operations of booster

pumps on HTST pasteurizer systems employing regenerators.

Frequency: Upon installation, each 3 months thereafter, after any change in the booster pump or the switch circuit and/or whenever the pressure switch seal is broken.

Criteria: The booster pump shall not operate unless there is at least a 6.9 kPa (1-pound) pressure differential on the pasteurized milk side of the regenerator.

Apparatus: Sanitary pressure gauge and pneumatic testing device, for checking and adjusting pressure switch settings.

A simple inexpensive pneumatic testing device may be made from a discarded 50 millimeter (2 inch) - 7BX sanitary tee, with two additional 13H nuts, one of which is provided with a 16A cap, drilled and tapped for a 13 millimeters (½ inch) galvanized iron nipple for the air connection. A hose connection is made to a compressed air source in the plant by means of a snap-on fitting. The air pressure can be controlled by an inexpensive pressure reducing valve (range [0-60] psi) followed by a 13 millimeters (½ inch) globe type bleeder valve connected into the side outlet of a 13 millimeters (½ inch) tee installed between the pressure reducing valve and the testing device. The pressure switch to be tested is disconnected from the pasteurizer and connected to another of the outlets of the sanitary tee, and the pressure gauge is connected to the third outlet of the sanitary tee. By careful manipulation of the air pressure reducing valve and the air bleeder valve, the air pressure in the testing device may be regulated slowly and precisely. (In operating the device, care should be taken to avoid exposing the pressure switch and the sanitary pressure gauge to excessive pressure which might damage them. This can be done by first closing off the air pressure regulating valve and opening fully the bleeder valve; these may then be manipulated slowly to bring the air pressure in the testing device within the desired range.) A test light of proper voltage can be placed in series with the pressure switch contact and in parallel with the electrical load (booster pump starter) so the actuation point may be readily determined.

Method: Check and make adjustment of pressure switch so as to prevent the operation of the booster pump unless the pressure of the pasteurized milk side of the regenerator is greater by at least 6.9 kPa (1 psi) than any pressure that may be generated on the raw side.

Procedure:

a. Determine maximum pressure of the booster pump.

(1) Install sanitary pressure gauge in tee at discharge of booster pump.

(2) Operate the pasteurizer with water with the flow-diversion device in forward-flow position, the metering pump operating at minimum speed possible and the booster pump operating at its rated speed. If vacuum equipment is located between the raw outlet from the regenerator and the metering pump, it should be bypassed while this determination is made.

(3) Note maximum pressure indicated by pressure gauge under these conditions.

b. Check and set the pressure switch.

(1) Install a sanitary pressure gauge of known accuracy on the pneumatic testing device to which the pressure switch sensing element should also be connected.

(2) Remove the seal and cover to expose adjustment mechanism on pressure switch.

(3) Operate the testing device and determine the pressure gauge reading at the cut-in point of the pressure switch which will light the test lamp. (If the switch is short circuited, the lamp will be lighted before air pressure is applied.)

(4) The cut-in point should be adjusted, if necessary, so as to occur at a pressure gauge reading at least 6.9 kPa (1 psi) greater than the maximum booster pump operating pressure, as determined under section a. of this method. Where adjustment is necessary, refer to the manufacturer's instructions for adjusting procedures. After adjustment, recheck actuation point and readjust if necessary.

(5) Replace cover, seal the pressure switch and restore sensing element to original location.

(6) Record test the maximum booster pump pressure developed and the pressure switch setting for the office record.

9.2 DIFFERENTIAL PRESSURE CONTROLLER

Application: Part 2.1 applies to all differential pressure controllers used to control the operation of booster pumps on HTST and HHST systems, or used to control the operation of flow-diversion devices on HHST systems and aseptic processing systems, when no vacuum breaker is located downstream from the holding tube.
Part 2.2 Applies only to HTST systems.
Part 2.3 Applies to the testing of HHST systems in which the differential pressure controller is used to control the operation of the flow-diversion device. Test 2.3 also applies to aseptic processing systems in which the differential pressure controller is used to control the flow-diversion device, product divert system, product divert valve or other acceptable control system.

Frequency: Upon installation, each 3 months thereafter and whenever the differential pressure controller is adjusted or repaired.

Criteria: The booster pump shall not operate, or the pasteurizer shall not operate in forward flow, unless the product pressure in the pasteurized side of the regenerator is at least 6.9 kPa (1 psi) greater than the product pressure in the raw side of the regenerator. When the differential pressure controller is used to control the flow-diversion device on HHST or aseptic processing systems, and improper pressure occurs in the regenerator, the flow-diversion device shall move to the diverted-flow position and remain in diverted flow until proper pressures are re-established in the regenerator and all product-contact surfaces between the holding tube and flow-diversion device have been held at or above the required pasteurization or aseptic processing temperature, continuously and simultaneously for at least the required time.

Apparatus: A sanitary pressure gauge and a pneumatic testing device, described under PRESSURE SWITCHES (Test 9.1) above can be used for checking and adjusting the differential pressure switch setting.

Method: The differential pressure switch is checked and adjusted to prevent the operation of the booster pump, or prevent forward flow, unless the product pressure in the pasteurized, or aseptic, side of the regenerator is at least 6.9 kPa (1 psi)

greater than the pressure in the raw side of the regenerator.

9.2.1 CALIBRATION OF DIFFERENTIAL PRESSURE CONTROLLER PROBES

Procedure:

a. Loosen the process connection at both pressure sensors and wait for any liquid to drain through the loose connections. Both pointers, or digital displays, should be within 3.5 kPa (0.5 psi) of .0 kPa (0 psi). If not, adjust pointer(s), or digital display(s), to read 0 kPa (0 pounds psi).

b. Remove both sensors from the processor and mount them in a tee, either at the discharge of the booster pump, or connected to the pneumatic testing device. Note the separation between the two pointers or digital displays. The change in elevations of the sensors will have caused some change in the zero readings.
Turn on the booster pump switch and depress the test push button to operate the booster pump. If the pneumatic testing device is used in lieu of the booster pump, adjust air pressure to the normal operating pressure of the booster pump. Note that the pointer, or digital display reading separation is within 6.9 kPa (1 psi) of that observed before pressure was applied. If not, the instrument requires adjustment or repair.

c. Record the test results for the office record.

9.2.2 HTST-- INTERWIRING OF THE PRESSURE DIFFERENTIAL CONTROLLER WITH THE BOOSTER PUMP

Method: Determine if the booster pump stops when the pressure differential is not properly maintained in the regenerator.

Procedure:

a. Connect the pasteurized pressure sensor to a testing tee with the other end of the tee capped.

(Caution: If there is water in the HTST system, ensure that the recorder/controller probe and the pasteurized sensor ports are capped before the metering pump is turned on.)

b. Turn on the metering pump and the booster pump.

c. Place the recorder/controller probe in hot water which is above the cut-in temperature.

d. Turn up the air supply on tee to provide an adequate pressure differential to start the booster pump.

e. Decrease the air supply to the testing tee until the pressure is less than 14 kPa (2 psi) of the pressure on the raw milk pressure sensor. The booster pump should have stopped. Ensure that the flow-diversion device remains in the forward flow position and the metering pump continues to operate.

f. Reseal regulatory controls as necessary and record test results for the office record.

Corrective Action: If the booster pump fails to stop when the pressure

differential is not maintained, have the plant maintenance personnel determine and correct the cause.

9.2.3 HHST AND ASEPTIC PROCESSING -- INTERWIRING OF THE PRESSURE DIFFERENTIAL CONTROLLER WITH THE FLOW-DIVERSION DEVICE IN AN HHST SYSTEM OR AN ACCEPTABLE ALTERNATIVE DEVICE OR SYSTEM IN ASEPTIC PROCESSING EQUIPMENT

Application:

a. To all differential pressure controllers used to control the operation of flow-diversion devices on HHST systems when no vacuum breaker is located downstream from the holding tube,

and:

b. To all differential pressure controllers used to control the operation of flow-diversion devices, product divert systems, product divert valve(s) or other acceptable control systems used in aseptic processing equipment.

Apparatus: A sanitary pressure gauge and a pneumatic testing device, described under PRESSURE SWITCHES (Test 9.1) above can be used for checking and adjusting the differential pressure switch setting.

Method: The differential pressure switch is checked and adjusted to prevent forward flow, unless the product pressure in the pasteurized side of the regenerator is at least 6.9 kPa (1 psi) greater than the pressure in the raw product side of the regenerator. In the case of product to water to product regenerators protected on the pasteurized or aseptic side, the water side of the regenerator shall be considered to be the "raw product" for purposes of this test.

Procedure:

a. Wire the test lamp in series with the signal from the pressure differential switch to the flow-diversion device.

b. Calibrate the pressure switch and probes (using test 9.2.1).

c. 1. Adjust the pressure on the pressure switch sensors to their normal operating pressures (with the pasteurized, or aseptic pressure at least 14 kPa (2 psi) higher than the raw product pressure.

2. The test lamp should be lit. If the test light is not lit increase the pasteurized, or aseptic pressure (or lower the raw product pressure) until the test light is lit.

3. Gradually lower the pasteurized, or aseptic side (or raise the raw product pressure) until the test light turns off.

4. The test light should turn off when the pasteurized, or aseptic pressure is 14 kPa (2 psi) or more higher than the raw product pressure.

5. Note the differential pressure at the point the light turns off.

6. Gradually raise the pasteurized, or aseptic pressure (or lower the raw product pressure) until the test light turns on.

7. The test light not should turn on until the pasteurized, or aseptic pressure is greater than 14 kPa (2 psi) higher than the raw product pressure. Note the

differential pressure at the point the light turns off.

Note: This test may be completed using a pneumatic testing device capable of producing differential pressures on the probes. This device should be capable of being operated (and be operated) in a manner so as to duplicate the conditions described above.

d. Seal the instrument and record the test results for the office record.

9.3. ADDITIONAL HTST TESTS FOR BOOSTER PUMPS--

Application: To all booster pumps used for HTST systems.

Criteria: The booster pump shall be wired so it cannot operate if the flow-diversion device is in the diverted position or if the metering pump is not in operation.

Apparatus: A sanitary pressure gauge and pneumatic testing device as described in Test 9.1 and water with a heat source.

9.3.1 BOOSTER PUMPS-- INTERWIRED WITH FLOW-DIVERSION DEVICE.

Method: Determine if the booster pump stops by dropping the temperature and causing the flow-diversion device to divert.

Procedure:

a. Connect the pasteurized pressure sensor to a testing tee with the other end of the tee capped.

(Caution: If there is water in the HTST system, ensure that the recorder/controller probe and the pasteurized sensor ports are capped before the metering pump is turned on.)

b. Turn on the metering pump and the booster pump.

c. Place the recorder/controller probe in hot water which is above the cut-in temperature.

d. Turn up the air supply on tee to provide an adequate pressure differential to start the booster pump.

e. Remove the recorder/controller probe from the hot water.

f. When the flow-diversion device moves to the diverted flow position, the booster pump must stop. Ensure that the pressure differential remains adequate and the metering pump continues to operate.

g. Reseal regulatory controls as necessary and record the test results for office records.

Corrective Action: If the booster pump fails to stop when the flow-diversion device is in the diverted flow position, have the plant maintenance personnel check the wiring and correct the cause.

9.3.2 BOOSTER PUMPS-- INTERWIRED WITH THE METERING PUMP

Method: Determine if the booster pump stops when the metering pump is off.

Procedure:

a. Connect the pasteurized pressure sensor to a testing tee with the other end of the tee capped.

(Caution: If there is water in the HTST system, ensure that the recorder/controller probe and the pasteurized sensor ports are capped before the metering pump is turned on.)

b. Turn on the metering pump and the booster pump.
c. Place the recorder/controller probe in hot water which is above the cut-in temperature.
d. Turn up the air supply on tee to provide an adequate pressure differential to start the booster pump.
f. turn off the metering pump. The booster pump must stop. Ensure that the pressure differential remains adequate and the flow-diversion device remains in the forward flow position.
g. Reseal regulatory controls as necessary and record the test results for the office record.

Corrective Action: If the booster pump fails to stop when the metering pump has been turned off, have the plant maintenance personnel determine and correct the cause.

TEST 10.
MILK-FLOW CONTROLS--
MILK TEMPERATURE AT
CUT-IN AND CUT-OUT

References: Item 16p(B), 16p(E).
Milk-flow controls shall be tested for milk temperature at cut-in and cut-out by one of the following applicable tests at the frequency prescribed:

10.1 HTST PASTEURIZERS

Application: All recorder/controllers used in connection with HTST pasteurizers except those in which the flow-diversion device is located at the end of the cooler section.

Frequency: Upon installation and at least once each three months thereafter by the regulatory agency; daily by the plant operator, or when a regulatory seal has been broken.

Criteria: No forward flow until pasteurization temperature has been reached. Flow diverted before temperature drops below minimum pasteurization temperature.

Apparatus: No supplemental materials needed.

Method: By observing the actual temperature of the indicating thermometer at the instant forward flow starts (cut-in) and stops (cut-out).

Procedure:

a. Cut-in temperature.

(1) While milk or water is completely flooding the sensing element of the recorder/controller and the indicating thermometer, increase the heat gradually so as to raise the temperature of the water or milk at a rate not exceeding 0.5^{o}C (1°F) every 30 seconds. If a water bath is used in place of water or milk flowing through the system, the water bath shall be adequately agitated during this test.

(2) Observe the indicating thermometer reading at the moment the forward flow starts (i.e., flow-diversion device moves). Observe that the frequency pen reading is synchronized with the recording pen on the same reference arc.

(3) Record the indicating thermometer reading on the recorder chart and initial. The regulatory agency shall record test findings.

b. Cut-out temperature.

(1) After the cut-in temperature has been determined, and while the milk or water is above the cut-in temperature, allow the water to cool slowly at a rate not exceeding (0.5°C) 1°F per 30 seconds. Observe the indicating thermometer reading at the instant forward flow stops.

(2) Re-seal regulatory controls as necessary and record the indicating thermometer reading on the recorder chart and initial.

Corrective Action: Should the reading be below the minimum pasteurization temperature, the cut-in and cut-out mechanism and/or the differential temperature mechanism should be adjusted to obtain proper cut-in and cut-out temperatures by repeated tests. When compliance is achieved, seal the controller mechanism.

10.2 HHST PASTEURIZERS AND ASEPTIC PROCESSING SYSTEMS USING INDIRECT HEATING

Application: All HHST pasteurizers and aseptic processing systems using indirect heating. When testing aseptic processing systems, the "product divert system"or "product divert valve" or "acceptable control system" may be substituted for the "flow-diversion device" when it is referenced in this test.

Frequency: Upon installation, and every 3 months thereafter; whenever the thermal controller seal is broken.

Criteria: The pasteurizer or aseptic processor shall not operate in forward flow unless pasteurization or aseptic processing temperature has been achieved. The product flow shall be diverted at a temperature no lower than the chosen pasteurization or aseptic processing standard.

Apparatus: No supplemental materials needed.

Method: The cut-in and cut-out temperatures are determined by observing the actual temperature in the constant temperature bath at which the two sensing elements signal for forward flow (cut-in) and diverted flow (cut-out).

Procedure:

a. Wire the test lamp in series with the control contacts of the sensing element (holding tube). Immerse this sensing element in the constant temperature bath. Raise the bath temperature at a rate not exceeding 0.5°C (1°F) every 30 seconds. Observe the temperature reading at the cut-in temperature. Record the temperature for the office record.

b. After the cut-in temperature has been determined and while the bath is above the cut-in temperature, allow the bath to cool slowly at a rate not exceeding 0.5°C (1°F) per 30 seconds. Observe the temperature reading on the controller when the test lamp goes out (cut-out temperature). Determine that the cut-out temperature on the thermal limit controller is equivalent to or greater than the chosen pasteurization or aseptic processing standard. Where adjustment is necessary, refer to the manufacturer's instructions. After adjustment, repeat the procedure above, and when the results are satisfactory, record the results for the office records.

c. Repeat the procedure for the other sensing element, (flow-diversion device). When proper cut-

out temperature has been verified for both sensing elements, seal the controller system.

10.3 HHST PASTEURIZERS AND ASEPTIC PROCESSING SYSTEMS USING DIRECT HEATING

Application: All HHST pasteurizers and aseptic processing systems using direct heating. When testing aseptic processing systems, the "product divert system" or "product divert valve" or "acceptable control system" may be substituted for the "flow-diversion device" when it is referenced in this test.

Frequency: Upon installation, every 3 months thereafter and whenever the thermal limit controller seal is broken.

Criteria: The pasteurizer or aseptic processor shall not operate in forward flow unless pasteurization or aseptic processing temperature has been achieved. The product flow shall be diverted at a temperature no lower than the chosen pasteurization or aseptic processing standard.

Apparatus: No supplemental materials needed.

Method: The cut-in and cut-out temperatures are determined by observing the actual temperature in the constant temperature bath at which each of the three sensing elements signals for forward flow (cut-in) and diverted flow (cut-out).

Procedure:

a. Wire the test lamp in series with the control contacts of the sensing element (the holding tube). Immerse this sensing element in the constant temperature bath. Raise the bath temperature at a rate not exceeding 0.5°C (1°F) every 30 seconds. Observe the temperature reading on the controller when the test lamp lights (cut-in temperature). Record the temperature for the office record.

b. After the cut-in temperature has been determined, and while the bath is above the cut-in temperature, allow the bath to cool slowly at a rate not exceeding 0.5°C (1°F) per 30 seconds. Observe the temperature reading on the controller when the test lamp goes out (cut-out temperature). Determine that the cut-out temperature, on the thermal limit controller, is equivalent to or greater than the chose pasteurization or aseptic processing standard. Where adjustment is necessary, refer to the manufacturer's instructions. After adjustment, repeat the procedure above and when the results are satisfactory, record the results for the office record.

c. Repeat the procedure for the other two sensing elements, i.e., the vacuum chamber and flow-diversion device. Rewire the test lamp in series with the control contacts from each sensing element, respectively. When proper cut-out temperatures have been verified for all three sensing elements, seal the controller system.

TEST 11. CONTINUOUS FLOW HOLDERS-- HOLDING TIME

Reference: Item 16p(B).

Continuous flow holders shall be tested for holding times by one of the applicable tests.

11.1 HTST PASTEURIZERS (except for magnetic flow meter systems)

Application: To all HTST pasteurizers employing a holding time of 15 seconds or longer.

Frequency: Upon installation, semiannually thereafter; whenever the seal on the speed setting is broken; any alteration is made affecting the holding time, the velocity of the flow (such as, replacement of pump, motor, belt, drive or driven pulleys, or decrease in number of HTST plates or the capacity of holding tube), or whenever a check of the capacity indicates a speedup.

Criteria: Every particle of milk shall be held for at least 15 seconds in both the forward- and diverted-flow positions.

Apparatus: Electrical conductivity measuring device, capable of detecting change in conductivity, equipped with standard electrodes; table salt (sodium chloride); 50 ml. syringe; stopwatch; and suitable container for salt solution.

Method: The holding time is determined by timing the interval for an added trace substance to pass through the holder. Although the time interval of the fastest particle of milk is desired, the conductivity test is made with water. The results found with water are converted to the milk flow time, by formulation, since a pump may not deliver the same amount of milk as it does water.

Procedure:

a. Examine the entire system to insure that all flow promoting equipment is operating at maximum capacity and all flow impeding equipment is so adjusted or bypassed as to provide the minimum of resistance to the flow. There shall be no leakage on the suction side of the timing pump.

b. Adjust variable speed pump to its maximum capacity (preferably with a new belt and full size impellers). Check homogenizers for seals, and/or gears or pulley identification. Check A. C. variable speed timing pump control boxes for seals.

c. Install one electrode at the inlet to the holder and the other electrode in the holder outlet. Close the circuit to the electrode located at the inlet to the holder.

d. Operate the pasteurizer, using water at pasteurization temperature, with the flow-diversion device in the forward-flow position.

e. Quickly inject 50 ml. of saturated sodium chloride solution into the holder inlet.

f. Start the stopwatch with the first movement of the indicator of a change in conductivity. Open the circuit to the inlet electrode and close the circuit to the electrode at the outlet of the holder.

g. Stop the stopwatch with the first movement of the indicator of a change in conductivity.

h. Record results.

i. Repeat the test six or more times, until six successive results are within 0.5 seconds of each other. The average of these six tests is the holding time for water in forward flow. When consistent readings cannot be obtained, purge the equipment, check instruments and connections and check for air leakage on the suction side. Repeat tests. Should consistent readings not be obtained, use the fastest time as the holding time for water.

j. Repeat steps d. through i. for the testing time on water in diverted flow.

k. With the pump at the same speed and equipment adjusted as in a. above, time the filling of a 38 liter (10-gallon) can with a measured weight of water, using the discharge outlet with the same head pressure as in normal operation. Average the time of several trials. (Since flow rates of the large capacity units make it very difficult to check by filling a 38 liter (10-gallon) can, it is suggested, that a calibrated tank of considerable size be used.)

l. For all gear type timing pumps, repeat procedure 'k' using milk.

For those homogenizers used as timing pumps repeat procedure 'k' using milk when the measured holding time for water is less than 120% of the legal holding time.

m. Compute the holding time for milk from one of the following formulas either by volume or by weight. Compute separately for forward flow and diverted flow. Re-seal regulatory controls as necessary.

BY VOLUME

The holding time for milk is equal to the holding time for water times quotient of the time it takes to deliver a volume of milk divided by the time it takes to deliver the same volume of water.

Tm = Tw(Vm/Vw)

In which: Tm = Adjusted product holding time for milk.

Tw = Holding time for water (the salt test results).

Vw = Time (usually in seconds) that it takes to pump a volume of water.

Vm = Time (usually in seconds) that it takes to pump the same volume of milk.

or

BY WEIGHT (Using specific gravity)

The holding time for milk is equal to the specific gravity of milk times the holding time for water times quotient of the time it takes to deliver a measured weight of milk divided by the time it takes to deliver the same weight of water.

Tm = 1.032xTw(Wm/Ww)

In which: 1.032 = the specific gravity of milk

Tm = Adjusted product holding time for milk.

Tw = Holding time for water (the salt test results).

Wm = Time (usually in seconds) that it takes to pump he a measured weight of milk.

Ww =Time (usually in seconds) that it takes to pump the same measured weight of water.

n. Record results for the office record.

Corrective Action: When the computed holding time for milk is less than that required, either in forward flow or diverted flow, the speed of the timing pump shall be reduced or an adjustment made in the holding tube and the timing test repeated until satisfactory holding time is achieved. Should an orifice be used, to correct the holding time in diverted flow, there should be no excessive pressure exerted on the underside of the valve seat of the flow-diversion device. Governors shall be sealed

on motors that do not provide a constant speed as provided in Item 16p(B)5b.

Application: To all high-temperature short-time pasteurizers with a Magnetic Flow Meter System, used in lieu of a metering pump.

Frequency: Upon installation, semiannually thereafter, whenever a seal on the Flow Alarm is broken, any alteration is made affecting the holding time, the velocity of the flow or the capacity of holding tube or whenever a check of the capacity indicates a speed up.

Criteria: Every particle of milk shall be held for at least a minimum holding time in both the forward and diverted flow positions.

Apparatus: Electrical conductivity measuring device, capable of detecting change in conductivity, equipped with standard electrodes, table salt (sodium chloride), 50-ml syringe, stopwatch and a suitable container for salt solution.

Method: The holding time is determined by timing the interval for an added trace substance to pass through the holder.

Procedure:

a. Examine the entire system to insure that all flow promoting equipment is operating at maximum capacity and all flow impeding equipment is so adjusted or bypassed as to provide the minimum resistance to the flow.

b. Adjust the set point on the Flow Alarm to its highest possible setting.

c. Adjust the set point on the Flow Controller to a flow rate estimated to yield an acceptable holding time.

d. Install one electrode at the inlet to the holder and the other electrode to the holder outlet. Close the circuit to the electrode located at the inlet to the holder.

e. Operate the pasteurizer, using water, above the pasteurization temperature, with the flow-diversion device in the forward flow position.

f. Quickly inject 50-ml of saturated sodium chloride solution into the holder inlet.

g. Start the stopwatch with the first movement of the indicator of a change in conductivity. Open the circuit to the inlet electrode and close the circuit to the electrode at the outlet of the holder.

h. Stop the stopwatch with the first movement of the indicator of a change in conductivity.

i. Record results.

j. Repeat the test six or more times, until six successive results are within 0.5 seconds of each other. The average of these six tests is the holding time for water in forward flow. When consistent readings cannot be obtained, purge the equipment, check instruments and connections and check for air leakage on the suction side of the pump, located at the raw product supply tank. Repeat tests. If six consecutive readings cannot be achieved within 0.5 seconds, in forward and diverted flow, the pasteurizing system is in need of repair.

k. With the Flow Controller at the same set point as in c. above, time the filling of a 38 liter (10-gallon) can with a measured volume of water using the discharge outlet, with the same head pressure as in normal operation. Average the time

of several trials. (Since flow rates of the large capacity units make it very difficult to check by filling a 38 liter (10-gallon) can, it is suggested that a calibrated tank of considerable size be used.)

l. Re-seal regulatory controls as necessary and record this result for the office record.

Corrective Action: When the computed holding time for milk is less than that required, either in forward flow or diverted flow, the set point on the Flow Controller shall be decreased, or adjustment made in the holding tube and the timing test repeated until a satisfactory holding time is achieved. Should an orifice be used to correct the holding time in diverted flow, there should be no excessive pressure exerted on the underside of the valve seat of the flow-diversion device.

11.2B CONTINUOUS FLOW HOLDERS--FLOW ALARM

Application: To all continuous flow pasteurization and aseptic processing systems using a Magnetic Flow Meter System to replace a metering pump. When testing aseptic processing systems, the "product divert system"or "product divert valve" or "acceptable control system" may be substituted for the "flow-diversion device" when it is referenced in this test.

Frequency: Upon installation, semiannually thereafter, whenever the seal on the Flow Alarm is broken, any alteration is made affecting the holding time, the velocity of the flow or the capacity of holding tube or whenever a check of the capacity indicates a speedup.

Criteria: When flow rate equals or exceeds the value at which the holding time was measured, the Flow Alarm shall cause the flow-diversion device to assume the diverted position, even though the temperature of the milk in the holding tube is above pasteurization or aseptic processing temperature.

Apparatus: None.

Method: Adjust the set point of the Flow Alarm so that flow is diverted when the flow rate equals or exceeds the value at which the holding time was measured or calculated (see parts 3 or 4 of this test).

Procedure:

a. Operate the pasteurizer or aseptic processing equipment in forward flow, at the flow rate at which holding time was measured, using water above the pasteurization or aseptic processing temperature.

b. Adjust set point on the Flow Alarm slowly downward until the frequency pen on the Recorder indicates that flow has been diverted. NOTE: when performing this test on systems which operate above the boiling point of water, be sure that the system is cooling is engaged to avoid the possibility of serious burns.

c. Observe that the flow-diversion device moved to the diverted position, while water passing through the holding tube remained above pasteurization or aseptic processing temperature.

d. Re-seal regulatory controls as necessary and record the set point of the Flow Alarm, the occurrence of flow-diversion and the temperature of the water in the holding tube, for the office record.

Corrective Action: If the flow-diversion device does not move to the

diverted position, when the frequency pen of the recorder indicates a diversion, a modification or repair of the control wiring is required.

11.2C CONTINUOUS FLOW HOLDERS--LOW FLOW/LOSS-OF-SIGNAL ALARM

Application: To all continuous flow pasteurization and aseptic processing systems using a Magnetic Flow Meter System to replace a metering pump. When testing aseptic processing systems, the "product divert system"or "product divert valve" or "acceptable control system" may be substituted for the "flow-diversion device" when it is referenced in this test.

Frequency: Upon installation, semiannually thereafter, whenever the seal on the Flow Alarm is broken, or any alteration is made affecting the holding time.

Criteria: Forward flow occurs only when flow rates are above the Loss-of-Signal Alarm set point.

Apparatus: None.

Method: By observing the actions of the frequency pens on the recorder and the position of the flow-diversion devise.

Procedure:

a. Operate the pasteurizer or aseptic processing equipment in forward flow, at a flow rate below the Flow Alarm set point and above the loss-of-signal alarm set point, using water.

b. Disrupt power to the magnetic flow meter or decrease the flow through the flow meter below the low flow alarm set point. Observe that the flow-diversion devise and both the safety thermal limit recorder frequency pen and the flow rate frequency pen assume the diverted flow position.

c. Re-seal regulatory controls as necessary and record results for the office record.

Corrective Action: If the valve does not divert or the pens do not move. Adjustment of low flow alarm or modification or repair of control wiring is required.

11.2D CONTINUOUS FLOW HOLDERS--FLOW OUT-IN AND CUT-OUT

Application: To all high-temperature short-time pasteurizers using a Magnetic Flow Meter System to replace a metering pump.

Frequency: Upon installation, semiannually thereafter, whenever the seal on the Flow Alarm is broken, any alteration is made affecting the holding time, the velocity of the flow or the capacity of holding tube, or whenever a check of the capacity indicates a speedup.

Criteria: Forward flow occurs only when flow rates are below the Flow Alarm set point and above the Loss-of-Signal Alarm set point.

Apparatus: None.

Method: By observing the recorder readings along with the action of the frequency pen on the recorder.

Procedure:

a. Operate the pasteurizer in forward flow, at a flow rate below the Flow Alarm set point and above the Loss-of-Signal Alarm set point, using water above pasteurization temperature.

b. Using the Flow Controller, increase flow rate slowly until the frequency pen on the recorder indicates a flow-diversion (flow cut-out point). The flow-diversion device will also assume the diverted position. Observe the reading of flow rate from the recorder, the instant flow cut-out occurs, as indicated by the frequency pen.

c. With the pasteurizer operating on water, above the pasteurization temperature, and with the flow-diversion device diverted because of excessive flow rate, slowly decrease flow rate until the frequency pen on the Flow Recorder indicates the start of a forward flow movement (flow cut-in point). Because of the time delay relay described in Test E, the flow-diversion device will not move immediately to the forward flow position. Observe the reading from the recorder, the instant flow cut-in occurs, as indicated by the frequency pen.

d. Re-seal regulatory controls as necessary and record results for the office record.

Corrective Action: If the cut-in or cut-out point occurs at a flow rate equal to or greater than the value at which holding time was measured, adjust the Flow Alarm to a lower set point and repeat the test.

11.2E CONTINUOUS FLOW HOLDERS--TIME DELAY RELAY

Application: To all high-temperature short-time pasteurizers using a Magnetic Flow Meter System to replace a metering pump.

Frequency: Upon installation, semiannually thereafter, whenever the seal on the Flow Alarm is broken, any alteration is made affecting the holding time, the velocity of the flow or the capacity of the holding tube, or whenever a check of the capacity indicates a speedup.

Criteria: Following the flow cut-in, as described in the test for flow cut-in and cut-out, forward flow shall not occur until all product in the holding tube has been held at or above pasteurization temperature for at least the minimum holding time.

Apparatus: Stopwatch.

Method: Set time delay equal to or greater than the minimum holding time.

Procedure:

a. Operate the pasteurizer in forward flow, at a flow rate below the Flow Alarm set point and above the Loss-of Signal Alarm set point, using water above pasteurization temperature.

b. Using the Flow Controller, increase flow rate slowly until the frequency pen on the Flow Recorder indicates a diversion movement and the flow-diversion device moves to the diverted position. There shall be no time delay between the movements of the frequency pen and the flow-diversion device.

c. With the pasteurizer operating on water, above the pasteurization temperature, with the flow-diversion device diverted because of excessive flow rate, slowly decrease flow rate.

d. Start the stopwatch the instant the frequency pen on the Flow Recorder indicates the start of a forward flow movement.

e. Stop the stopwatch the instant the flow-diversion device starts to move to the forward flow position.

f. Record results for the office record.

g. Install and seal enclosure over the time delay relay.

Corrective Action: If the time delay is less than the minimum holding time, increase the time setting on the time delay and repeat this test procedure.

11.3 CALCULATED HOLD FOR INDIRECT HEATING

Application: To all HHST pasteurizers using indirect heating.

Frequency: When installed, semiannually thereafter, whenever the seal on speed setting is broken, whenever any alteration is made affecting the holding time, the velocity of the flow, e.g., replacement of pump, motor, belt, driver or driven pulley, decrease in number of heat-exchange plates or the capacity of holding tube and whenever a check of the capacity indicates a speedup.

Criteria: Every particle of product shall be held for the minimum holding time in both the forward and diverted-flow positions.

Apparatus: No supplemental materials needed.

Method: Fully developed laminar flow is assumed and holding tube length is calculated. An experimental determination of pumping rate is required; this is accomplished by determining the time required for the pasteurizer to fill a vessel of known volume, converting these data by division to obtain flow rate in gallons per second and multiplying this value by the proper number in Table 12. of this paragraph to obtain the required length of the holding tube. Holding tube lengths for HHST pasteurizers with indirect heating for a pumping rate of 1 gallon/second are:

Table 13. Holding Tube Length--HHST Pasteurizers--Indirect Heating

Holding Time (sec.)	Tubing Size (inches)				
	1	1-1/2	2	2-1/2	3
	Holding Tube Length (inches)				
1.0	723.0	300.0	168.0	105.0	71.4
0.5	362.0	150.0	84.0	52.4	35.7
0.1	72.3	30.0	16.8	10.5	7.14
0.05	36.2	15.0	8.4	5.24	3.57
0.01	7.23	3.0	1.68	1.05	.714

Procedure:

a. Examine the entire system to ensure that all flow promoting equipment is operating at maximum capacity and all flow impeding equipment is so adjusted or bypassed to provide the minimum of resistance to the flow. This means that in-line filters must be removed, booster pumps must be in operation and vacuum equipment in the system must be operating at a maximum vacuum. Also, before the tests are begun, the pasteurizer should be operated at maximum flow for a sufficient time to purge air from the system (about 15 minutes) and pipe connections on the suction side of the metering pump should be made tight enough to exclude the entrance of air. With the pasteurizer operating with water, adjust the metering pump

to its maximum capacity, preferably with a new belt and full-size impellers.

b. Determine that no flow exists in the diverted line, and measure the time required to deliver a known volume of water at the forward-flow discharge line. Repeat the test at least once to determine that the measurements are consistent.

c. Repeat the steps in paragraphs a. and b. of this procedure in diverted flow by collecting the effluent at the discharge of the divert line.

d. Select the greatest flow rate (shortest delivery time for the known volume) and calculate the flow rate in gallons per second by dividing the known volume by the time required to collect he known volume. Multiply this value with the appropriate value in Table 13. to determine the required holding tube length.

e. Determine the number and type of fittings in the holding tube and convert these to equivalent lengths of straight pipe with the use of Table 14. of this paragraph. Determine the total length of the holding tube by adding the equivalent lengths of the fittings to the measured straight lengths of pipe. Record the number and type of fittings, the number and length of straight pipe and the holding tube configuration for the office record. If the temperature sensor is located at the beginning of the holding tube, the holding tube shall be protected against heat loss by material that is impervious to water. Re-seal regulatory controls as necessary.

Table 14. Centerline Distances of 3-A Fittings

3-A (inches) designation	Fitting size				
	1	1-1/2	2	2-1/2	3
	Centerline distance (inches)				
2C 90° bend	3.4	4.8	6.2	8.0	9.7
2CG 90° bend	3.1	4.5	5.8	7.6	9.3
2F 90° bend	3.4	4.8	6.2	8.0	9.7
2FG 90° bend	3.1	4.5	5.8	7.6	9.3
2E 90° bend	3.4	4.8	6.2	8.0	9.7
2EG 90° bend	3.2	4.6	6.0	7.7	9.4

Alternate procedure: For pasteurizers of large capacity, the method of measuring flow rate at the discharge of the pasteurizer is inconvenient, the following alternate test procedure may be used. Remove the divert line from the raw-product supply tank and turn off the product pump feeding the raw-product supply tank. Suspend a sanitary dip stick in the raw-product supply tank and operate the pasteurizer at maximum capacity. Record the time required for the water level to move between two graduations on the dip stick. The volume of water is calculated from the dimensions of the raw-product supply tank and the drop in water level. Flow rate is determined as follows: Divide the volume of

water removed from the raw-product supply tank by the time required to remove it.

Corrective Action: If the length of the holding tube is shorter than the calculated length, reseal the metering pump at a slower maximum speed, or lengthen the holding tube, or both, and repeat the above determination.

11.4 CALCULATED HOLD FOR DIRECT HEATING

Application: To all HHST pasteurizers using direct contact heating.

Frequency: When installed, semiannually thereafter, whenever the seal on the speed setting is broken, whenever any alteration is made affecting the holding time, the velocity of the flow, e.g., replacement of pump, motor, belt, driver or driven pulley, or decrease in the number of heat exchange plates, or the capacity of the holding tube and whenever a check of the capacity indicates a speedup.

Apparatus: No supplemental materials needed.

Criteria: Every particle of product shall be held for the minimum holding time in both forward- and diverted-flow positions.

Method: Fully developed laminar flow and a temperature increase by steam injection of 67°C (120°F) are assumed, the temperature-time standard is chosen by the processor and the required holding tube length is calculated from an experimental determination of pumping rate.

Procedure.—

a. Examine the entire system to ensure that all flow promoting equipment is operating at a maximum capacity and all flow impeding equipment is so adjusted or bypassed as to provide the minimum resistance to the flow. Remove in-line filters, make certain booster pumps are operating and that vacuum equipment in the system is operating at maximum vacuum. Also, before the tests are begun, operate the pasteurizer at maximum flow for a sufficient time to purge the air from the system (about 15 minutes) and tighten pipe connections on the suction side of the metering pump to exclude entrance of air. With the pasteurizer operating on water, adjust the metering pump to its maximum capacity. Determine that no flow exists in the diverted line, and measure the time required to deliver a known volume of water at the discharge of the pasteurizer in forward flow. Repeat the test at least twice to determine that the measurements are consistent.

b. Repeat the last step (a. above) in diverted flow by collecting the effluent at the discharge of the divert line. Select the greatest flow rate, the shortest delivery time for the known volume and calculate the flow rate in gallons per second, by dividing the tube lengths for direct contact heating pasteurizers with a pumping rate of 1 gallon/second are:

Table 15. Holding Tube Length, HHST Pasteurizers, Direct Heating

Holding time (sec.)	Tubing Size (inches)				
	1	1-1/2	2	2-1/2	3
	Holding tube length (inches)				
1	810.0	336.0	188.0	118.0	80.0
0.5	405.0	168.0	94.0	59.0	40.0
0.1	81.0	33.6	18.8	11.8	8.0
0.05	40.5	16.8	9.40	5.90	4.0
0.01	8.10	3.36	1.88	1.18	0.8

c. Determine the number and type of fittings in the holding tube, and convert these to equivalent lengths of straight pipe with the use of Table 14. Determine the total length of the holding tube by adding the equivalent lengths of the fittings to the measured lengths of straight pipe. If the actual holding tube length is equivalent to or greater than the required holding tube length, record the number and type of fittings, the number and length of straight pipes and the holding tube configuration, for the office record. Make sure that the holding tube slopes upward at least 6.35 millimeters (0.25 inch) per foot. The holding tube shall also be protected against heat loss with insulation that is impervious to water if the temperature sensor is located at the beginning of the holding tube. Reseal regulatory controls as necessary.

Alternate procedure: For pasteurizers of large capacity, the method of measuring flow rate at the discharge of the pasteurizer is inconvenient and the following alternate test procedure may be used. Remove the divert line from the raw product supply tank and turn off the product pump feeding the raw-product supply tank. Suspend a sanitary dip stick in the raw-product supply tank and operate the pasteurizer at maximum capacity. Record the time required for the water level to move between two graduations on the dip stick. Calculate the volume of water from the dimensions of the raw-product supply tank and the drop in water level. Determine flow rate as follows: Divide the volume of water, in gallons, removed from the raw-product supply tank by the time, in seconds, required to remove it. Then use Table 15. to calculate the required holding tube length.

Corrective Action: If the length of the holding tube is shorter than the calculated length, reseal the metering pump at a slower maximum speed, or lengthen the holding tube, or both, and repeat the procedure.

11.5 HOLDING TIME-- STEAM INFUSERS WITH STEAM POP OFF VALVE AND VACUUM CHAMBER ORIFICE USED IN PLACE OF A TIMING PUMP--

Application: To all HHST pasteurizers using direct steam infusion heating and using a steam pop off valve and a vacuum chamber orifice in place of a timing pump.

Frequency: Upon installation, and every 3 months thereafter, or when a regulatory seal has been broken.

Apparatus: No supplemental materials needed.

Criteria: Every particle of product shall be held for the minimum holding time in both forward- and diverted-flow positions.

The following controls are required:

a. The steam infuser shell or feed line shall be equipped with a pressure relief pop-off valve. This pressure relief valve shall be located and sized so that the total pressure inside the infuser can never exceed the set point on this pressure relief valve.

b An orifice or restriction, permanently installed in a noticeable fitting, shall be placed in the holding tube just prior to the vacuum chamber. The opening in the orifice or restriction, shall be sized to insure a minimum product residence time at least as long as that specified in the chosen HHST standard.

c. The size of the opening in the orifice or restriction and the setting of the steam pressure relief valve shall be determined by trial and error. Once an appropriate maximum flow rate has been determined and a legal minimum holding time has been calculated, both the restriction or orifice and the steam pressure setting on the pressure relief valve shall be sealed so that neither can be changed.

d. The state regulatory authority shall keep records of the orifice or restriction size. They shall also keep records of the location, size, setting and manufacturer of the pressure relief valve.

Procedure:

a. Examine the entire system to ensure that all flow promoting equipment is operating at a maximum capacity and all flow impeding equipment is so adjusted or bypassed as to provide the minimum resistance to the flow.

b. The steam pressure in the infuser shall be raised to a level just below the pressure relief point on the pop off valve.

c. Any back-pressure valves or other variable restrictions in the holding tube shall be normally placed into the fully open position.

d. All air bleeds to the vacuum chamber shall be closed so that the chamber will be operating under maximum vacuum.

e. Before the tests are begun, operate the pasteurizer at maximum flow for a sufficient time to purge the air from the system (about 15 minutes) and tighten pipe connections on the suction side of the metering pump to exclude entrance of air.

f. Determine that no flow exists in the diverted line, and measure the time required to deliver a known volume of water at the discharge of the pasteurizer in forward flow.

g. Repeat the test at least twice to determine that the measurements are consistent.

h. Repeat the last step (a. through e. above) in diverted flow by collecting the effluent at the discharge of the divert line.

i. Select the greatest flow rate, the shortest delivery time for the known volume and calculate the flow rate in gallons per second, by dividing the known volume by the time required to collect the known volume.

j. Multiply this value, gallons per second, with the appropriate value in Table 15, to determine the required holding tube length.

k. Holding tube lengths for direct contact heating pasteurizers with a pumping rate of 1 gallon/second are specified in Table 13.

l. Determine the number and type of fittings in the holding tube, and convert these to equivalent lengths of straight pipe with the use of Table 14. Determine the total length of the holding tube by adding the equivalent lengths of the fittings to the measured lengths of straight pipe.

m. Make sure that the holding tube slopes upward at least 6.35 millimeters (0.25 inch) per foot.

n. The holding tube shall also be protected against heat loss with insulation that is impervious to water if the temperature sensor is located at the beginning of the holding tube.

o. If the actual holding tube length is equivalent to or greater than the required holding tube length, record the number and type of fittings, the number and length of straight pipes and the holding tube configuration, for the office record. Re-seal regulatory controls as necessary.

Corrective Action: If the length of the holding tube is shorter than the calculated length, lengthen the holding tube and repeat the above determination.

TEST 12.
THERMAL LIMIT CONTROLLER FOR CONTROL-SEQUENCE LOGIC

References: Items 16p(B), 16p(E).

Thermal limit controllers used with HHST and aseptic processing systems that have the flow-diversion device located downstream from the regenerator and/or cooler shall be tested by one of the following applicable tests at the frequency specified.

12.1 HHST PASTEURIZATION AND ASEPTIC PROCESSING-- INDIRECT HEATING

Application: To all HHST pasteurizers and aseptic processing systems using indirect heating. When testing aseptic processing systems, the "product divert system"or "product divert valve" or "acceptable control system" may be substituted for the "flow-diversion device" when it is referenced in this test.

Frequency: Upon installation, and every 3 months thereafter, or when a regulatory seal has been broken.

Criteria: The pasteurizer, or aseptic processing equipment, shall not operate in forward flow until the product surfaces downstream from the holding tube have been sanitized, or in the case of aseptic processing equipment, sterilized. On start up, surfaces shall be exposed to fluid at pasteurization, or in the case of aseptic processing equipment, sterilizing temperature for at least the required pasteurization or sterilization time. If the product temperature falls below the pasteurization or sterilization standard in the holding tube, forward flow shall not be re-achieved until the product surfaces downstream from the holding tube have been re-sanitized, or in the case of aseptic processing equipment, re-sterilized.

Apparatus: A constant temperature bath of water, or oil, and the test lamp from the pneumatic testing device described in Test 9.1 can be used to check the control-sequence logic of the thermal limit controller.

Method: The control-sequence logic of the thermal limit controller is determined by monitoring the electric signal from the thermal limit controller during a series of immersions and removals of the two sensing elements from a bath heated above the cut-in temperature.

Procedure:

a. Heat a constant temperature water or oil bath a few degrees above the cut-in temperature on the thermal limit controller. Wire the test lamp in series with the signal from the thermal limit controller to the flow-diversion device. If some processors have time delays built into their control logic, in excess of that required for public health reasons, by pass these timers or account for their effect in delaying forward flow.

b. Immerse the sensing element of the flow-diversion device in the bath, which is above the cut-in temperature. The test lamp should remain unlighted, i.e., diverted flow. Leave the sensing element in the bath.

c. Immerse the sensing element from the holding tube in the bath. The test lamp should light up, i.e., forward flow after a minimum time delay of 1 second for continuous flow pasteurization systems. For aseptic processing systems no delay is required if the filed process includes a documented sterilization period.

d. Remove the sensing element of the flow-diversion device from the bath. The test lamp should remain lighted, i.e., forward flow.

e. Remove the holding tube sensing element from the bath. The test lamp should go out immediately, i.e., diverted flow.

f. Re-immerse the sensing element of the holding tube in the bath. The test lamp should remain unlighted, i.e., diverted flow. Re-seal regulatory controls as necessary.

Corrective Action: If the control-sequence logic of the thermal limit controller does not follow this pattern, the instrument shall be rewired to conform to this logic.

12.2 HHST PASTEURIZATION AND ASEPTIC PROCESSING-- DIRECT HEATING

Application: To all HHST pasteurizers and aseptic processing systems using direct contact heating. When testing aseptic processing systems, the "product divert system"or "product divert valve" or "acceptable control system" may be substituted for the "flow-diversion device" when it is referenced in this test.

Frequency: Upon installation and every 3 months thereafter, or when a regulatory seal has been broken.

Criteria: The pasteurizer, or aseptic processing equipment, shall not operate in forward flow until the product surfaces downstream from the holding tube have been sanitized, or in the case of aseptic processing equipment, sterilized. On start up, surfaces shall be exposed to fluid at pasteurization, or in the case of aseptic processing equipment, sterilizing

temperature for at least the required pasteurization or sterilization time. If the product temperature falls below the pasteurization or sterilization standard in the holding tube, forward flow shall not be re-achieved until the product surfaces downstream from the holding tube have been re-sanitized, or in the case of aseptic processing equipment, re-sterilized.

Apparatus: A constant temperature bath of water, or oil, and the test lamp from the pneumatic testing device described in Test 9.1 can be used to check the control-sequence logic of the thermal limit controller.

Method: The control-sequence logic of the thermal limit controller is determined by monitoring the electric signal from the thermal limit controller during a series of immersions and removals of the three sensing elements from a bath heated above the cut-in temperature.

Procedure:

a. Heat a water or oil bath to a constant temperature, a few degrees above the cut-in temperature on the thermal limit controller. Wire the test lamp in series with the signal from the thermal limit controller to the flow-diversion device. If some processors have time delays built into their control logic, in excess of that required for public health reasons, bypass these timers or account for their effect in delaying forward flow. Before performing this test, make sure the pressure switches, which must be closed to achieve forward flow, have also been bypassed.

b. Immerse the sensing element from the flow-diversion device in the bath which is above the cut-in temperature. The test lamp should remain unlighted, i.e., diverted flow. Remove this sensing element from the bath.

c. Immerse the sensing element, from the vacuum chamber, in the bath. The test lamp should remain unlighted, i.e., diverted flow. Remove the sensing element from the bath.

d. Immerse two sensing elements, from the vacuum chamber and flow-diversion device, in the bath. The test lamp should remain unlighted, i.e., diverted flow. Leave the two sensing elements in the bath.

e. Immerse the third sensing element, from the holding tube, in the bath. The test lamp should light up, i.e., forward flow, after a minimum time delay of 1 second for continuous flow pasteurization systems. For aseptic processing systems no delay is required if the filed process includes a documented sterilization period.

f. Remove one sensing element, the flow-diversion device, from the bath. The test lamp should remain lighted, i.e., forward flow.

g. Remove another sensing element, the vacuum chamber, from the bath. The test lamp should remain lighted, i.e., forward flow.

h. Remove the last sensing element, the holding tube, from the bath. The test lamp should go out, i.e., diverted flow, immediately.

i. Re-immerse the sensing element, holding tube, in the bath. The test lamp should remain unlighted, i.e., diverted flow. Re-seal regulatory controls as necessary.

Corrective Action: If the control-sequence logic of the thermal limit con-

troller does not follow the pattern set out in the procedure section, the instrument shall be rewired to conform to this logic.

TEST 13.
SETTING OF CONTROL SWITCHES FOR PRODUCT PRESSURE IN THE HOLDING TUBE

Reference: Item 16p(B).

Application: To all HHST pasteurizers and aseptic processing systems which are capable of operating with product in forward flow mode, with less than 518 kPa (75 psig) pressure in the holding tube. When testing aseptic processing systems, the "product divert system"or "product divert valve" or "acceptable control system" may be substituted for the "flow-diversion device" when it is referenced in this test.

Frequency: Upon installation, every 3 months thereafter, whenever the pressure switch seal is broken and whenever the operating temperature is changed.

Criteria: The pasteurizer or aseptic processor shall not operate in forward flow unless the product pressure in the holding tube is at least 69 kPa (10 psi) above the boiling pressure of the product.

Apparatus: A sanitary pressure gauge and a pneumatic testing device described in Test 9.1 can be used for checking and adjusting the pressure switch setting.

Method: The pressure switch is checked and adjusted so as to prevent forward flow unless the product pressure in the holding tube is at least 69 kPa (10 psi) above the boiling pressure of the product.

Procedure:

a. From Figure 45 determine the pressure switch setting necessary for the operating temperature (not the diversion temperature) being used in the process.

Install the sanitary pressure gauge, of known accuracy, and the pressure switch sensing element on the pneumatic testing device.

b. Remove the seal and cover to expose the adjustment mechanism on the pressure switch. Place the test lamp in series with the pressure switch contacts or use some other method to monitor the cut-in signal.

c. Apply air pressure to the sensing element and determine the pressure gauge reading at the cut-in point of the switch which sill light the test lamp. If the switch is short circuited, the lamp will be lit before air pressure is applied.

d. Determine that the cut-in pressure on the switch is equivalent to or greater than the required pressure from Figure 45. Where adjustment is necessary, refer to the manufacturer's instructions.

e. After adjustment, repeat the procedure.

f. When the results are satisfactory, seal the pressure switch setting and record the results for the office record.

For each operating temperature on HHST pasteurizers or aseptic processing systems using direct contact heating, the product pressure switch setting is as follows:

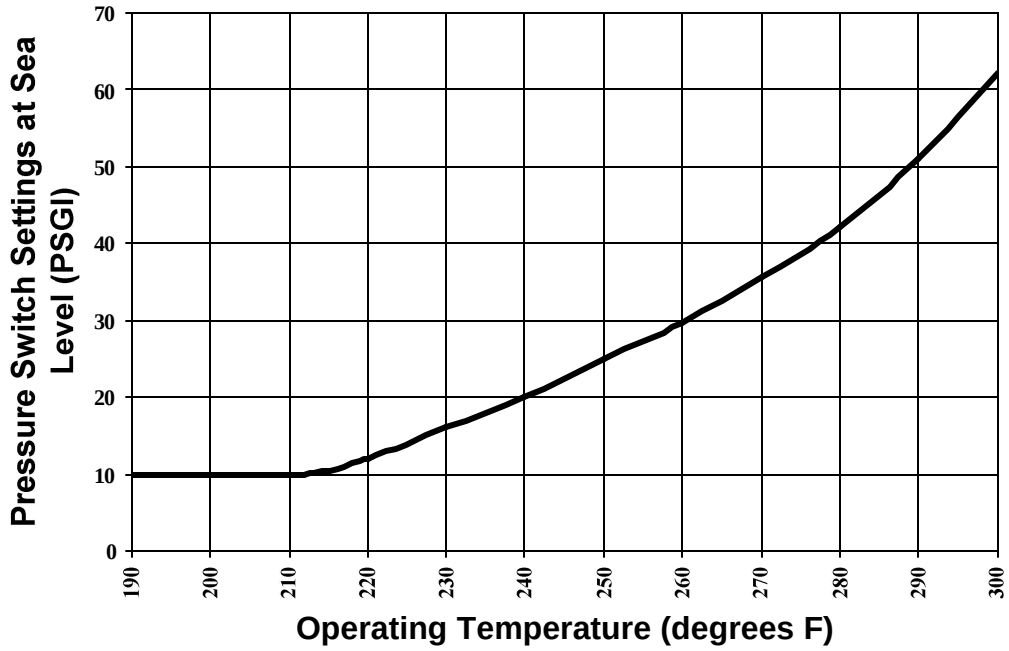

This pressure setting shall be adjusted upward by the difference between local normal atmospheric pressure and sea level.

Figure 45. Pressure Switch Setting

TEST 14. SETTING OF CONTROL SWITCHES FOR DIFFERENTIAL PRESSURE ACROSS THE INJECTOR

Application: To all HHST pasteurizers and aseptic processing systems using direct contact heating. When testing aseptic processing systems, the "product divert system"or "product divert valve" or "acceptable control system" may be substituted for the "flow-diversion device" when it is referenced in this test.

Frequency: Upon installation, every 3 months thereafter and whenever the differential pressure controller seal is broken.

Criteria: The pasteurizer or aseptic processor shall not operate in forward flow unless the product pressure drop across the injector is at least 69 kPa (10 psi).

Apparatus: A sanitary pressure gauge and a pneumatic testing device described in Test 9.1 can be used for checking and adjusting the differential pressure controller.

Method: Check the differential pressure switch and adjust it so as to prevent forward flow, unless the differential pressure across the injector is at least 69 kPa (10 psi).

Procedure:

a. Remove both pressure sensing elements from their original locations on the pasteurizer, or

aseptic processor. Install a sanitary pressure gauge of known accuracy and the pressure sensing element, that is installed prior to the steam injection, on the pneumatic testing device.

b. Leave the other pressure sensing element open to the atmosphere, but at the same height as the sensing element connected to the pneumatic testing device.

c. Wire the test lamp in series with the microswitch of the differential pressure controller or use the method provided by the instrument manufacturer to monitor the cut-in signal.

d. Apply air pressure to the sensing element and determine the pressure gauge reading at the cut-in point of the differential pressure switch that will light the test lamp.

e. Determine that the differential pressure cut-in on the controller is at least 69 kPa (10 psi).

f. After adjustment, repeat the procedure.

g. When the results are satisfactory, seal the instrument and record the results for the office record.

APPENDIX J. STANDARDS FOR THE FABRICATION OF SINGLE-SERVICE CONTAINERS AND CLOSURES FOR MILK AND MILK PRODUCTS

PREFACE

Single-service containers and closures have been used in the dairy industry for many years. Industry applied quality assurance controls for manufacturing and handling of the materials have made it possible for these products to reach the point of use in a sanitary condition free from toxic materials which may migrate into milk or milk products.

Within recent years, single-service container manufacturers have introduced new materials, equipment, and design concepts for these containers and closures. Evaluation of the industry's basic manufacturing and handling techniques and establishment of sanitation criteria assure that single-service containers and closures and the materials from which they are formed are safe and in compliance with bacteriological standards of Item 12p of the Grade "A" Pasteurized Milk Ordinance -- 1978 Recommendations of the United States Public Health Service / Food and Drug Administration (1999 Revision).

STANDARDS FOR THE FABRICATION OF SINGLE-SERVICE CONTAINERS AND CLOSURES FOR MILK AND MILK PRODUCTS

A. PURPOSE AND SCOPE

The use of these standards will insure the production of sanitary containers and closures for milk and milk products, as defined in the *Grade "A" Pasteurized Milk Ordinance*.

These standards shall apply to all blank fabricators, converters, printers, closure manufacturers, plastic laminators, sheet formers, blow molders, vacuum formers, plastic extruders, injection molders, preformers, manufacturers of valves, tubes, dispensing devices, sample containers and similar plants. These also apply to the installation, operation, cleaning, sanitization and maintenance of equipment used in compounding materials for the fabrication, production, handling and storage of single-service containers and closures.

Milk and food plants manufacturing and/or selling containers to other milk or milk products plants as defined in the *Grade "A" Pasteurized Milk Ordinance* shall meet all the requirements of these standards. These requirements shall not apply to paper mills or resin manufacturing plants.

Grade “A” milk and milk product plants as defined in the *Grade "A" Pasteurized Milk Ordinance* shall use single-service containers and closures from plants certified in the latest quarterly publication of the *Sanitation Compliance and Enforcement Ratings of Interstate Milk Shippers* (IMS List).

B. DEFINITIONS

The following definitions shall be employed in the application of these sanitation standards.

1. "Single-service container" shall mean any container having a milk or milk product-contact surface and used in the packaging,

handling or storage of Grade “A” milk and milk products which is intended for one use only.

2. "Closure" shall mean a cap, lid, seal, tube, valve, lidding material or other device in or on a container used for the purpose of enclosing or dispensing the contents.

3. "Paper stock" means any paper made from the following materials:

a. Paper and paperboard manufactured from clean, sanitary virgin chemical or mechanical pulp or from "broke and trim" of such paper and paperboard, provided they have been handled, treated and stored in a clean, sanitary manner, or reclaimed fiber using acceptable or approved protocol in compliance with Title 21 Code of Federal Regulation (CFR) 176.260.

b. Components meeting the requirements of the *Federal Food, Drug, and Cosmetic Act* as amended.

4. "Broke and trim" means paper and paperboard that have been discarded anywhere in the process of manufacture, such as on paper-making machines in the form of trim. This may also include unprinted trim from the converting process provided the trim has been handled, treated and transported in a clean, sanitary manner.

5. "Plastic molding, forming, extrusion, and laminating resins" means:

a. Resins or an intimate admixture of resins with other ingredients which meet the requirements of the *Federal Food, Drug, and Cosmetic Act* as amended and;

b. Plastic composed solely of clean cuttings or regrind, provided they have been handled and maintained in a sanitary manner.

This definition shall not preclude the use of recycled plastic material when it complies with a protocol which has been reviewed and accepted by the Food and Drug Administration.

6. "Regrind" means that clean plastic material which is trimmed from the container or closure, and imperfectly formed containers or closures which result from the manufacture of single-service containers and closures, provided it is handled in a clean, sanitary manner. This may be in its trimmed or molded form and ground in a suitable grinder within the plant. It shall not include any material, container or closure which comes from an unapproved source or whose source, chemical content and treatment is unknown, or which may have poisonous or deleterious material retained in the plastic which migrates to the food at levels exceeding regulatory levels. Regrind, when transported from one approved plant to another, will be shipped in suitable, clean, sealed, properly labeled containers. This definition shall not preclude the use of regrind plastic material when it complies with a protocol which has been reviewed and accepted by the FDA.

7. "Production scrap" means that material which remains from the manufacture of single-service containers or closures which has been handled or treated in such a manner that it does not comply with the definition for "broke and trim" or "regrind", but may be collected for recycling. It may contain material such as containers or trim that have fallen on the floor.

8. "Coatings" means any layer or covering which is applied to the product-contact surface.

9. "Product-contact surface" means those surfaces of the container or closure with which the product comes in contact.

10. "Nontoxic materials" means those materials which are free of substances which may render the milk injurious to health or which may adversely affect the flavor, odor, composition or bacteriological quality of the product and which meet the requirements of the *Federal Food, Drug, and Cosmetic Act* as amended.

11. "Metals" means those metals which are nontoxic, nonabsorbent and corrosion-resistant under conditions of intended use.

12. "Sanitization" is the application of any effective method or substance to a clean surface for the destruction of pathogens and of other microorganisms as far as is practicable. Such treatment shall not adversely affect the equipment, the milk or milk product, or the health of consumers. Chemical sanitizers shall meet the requirements contained in Part I of Appendix F of the *Grade "A" Pasteurized Milk Ordinance*.

13. "Single-service articles" means those articles which are constructed wholly, in part, or in combination from paper, paperboard, molded pulp, plastic, metals, coatings or similar materials which are intended by the manufacturer for one usage only.

14. "Preformed container" means a container in completed form ready for filling.

15. "Manufacturer" means any person or company in the business of manufacturing a single-service container or closure product which is capable for use by a milk plant for the packaging of a finished Grade “A” milk product.

16. "Component part" shall mean any item that by itself, does not perform any function, but when assembled with one or more component parts or closures, becomes a part of the single-service container or closure. These may include, but are not limited to blanks, sheeting, filling valve parts, tubes, dispensing devices and sampling containers. All material used for fabrication of a component part must meet the requirements of the *Federal Food, Drug, and Cosmetic Act* as amended .

17. “Sample set” means: for the rinse test, a minimum of four containers shall be tested. For the swab test a minimum of four 50 square centimeters areas of surface from separate containers shall be tested. In the case of containers or closures with a product-contact surface area smaller than 50 square centimeters, more than 4 containers or closures to equal at least 50 square centimeters times 4 will be required to be swabbed.

18. “Manufacturing Line” means a manufacturing process such as extrusion, blow-mould, etc.

C. BACTERIAL STANDARDS AND EXAMINATION OF SINGLE-SERVICE CONTAINERS AND CLOSURES

1. Paper stock shall meet the bacteriological standard of not more than 250 colonies per gram as determined by the disintegration test. The supplier of the paper stock shall certify that his/her paper stock was manufactured in compliance with this standard. This applies only to the paper stock prior to lamination.

2. Where a rinse test can be used, the residual microbial count shall not exceed 50

per container, except that in containers less than 100 ml, the count shall not exceed 10, or not over 50 colonies per 8 square inches (1 per square centimeter) of product-contact surface when the swab test is used, in 3 out of 4 samples taken at random on a given day. All single-service containers and closures shall be free of coliform organisms.

3. During any consecutive six months, at least four sample sets shall be collected in at least four separate months, except when three months show a month containing two sampling dates separated by at least 20 days, and analyzed at an official laboratory, commercial laboratory or industry laboratory approved by the state milk laboratory certifying agency specifically for the examinations required under these standards. See item 12p of the *Grade "A" Pasteurized Milk Ordinance* for sampling of containers and closures in pasteurization plants.

4. When a single-service container or closure is made from one or more component parts as defined in this document, only those final assembled products which may have product-contact surface(s)must be sampled and tested for compliance with Section "C".

Procedures for obtaining samples and for the laboratory examination of these products are contained in the latest edition of *Standard Methods for the Examination of Dairy Products* and shall be in substantial compliance with these methods. Such procedures and examinations shall be evaluated in accordance with the current revision of *The Evaluation of Milk Laboratories, 1985 Recommendations of the United States Public Health / Food and Drug Administration.* A list of approved laboratories may be found in *Sanitation Compliance and Enforcement Ratings of Interstate Milk Shippers* which is published quarterly by the Food and Drug Administration.

D. FABRICATION PLANT STANDARDS

Note: To be used in conjunction with form FD 2359c, "Manufacturing Plant Inspection Report -- Single-Service Containers".

1. FLOORS

a. The floor shall be smooth, impervious, and maintained in a state of good repair.

b. The joints between the walls and floor shall be tight, impervious and shall have coved or sealed joints.

c. Where floor drains are provided, they shall be properly trapped and floors sloped to drain.

2. WALLS AND CEILINGS

a. Walls and ceilings of fabricating areas shall have a smooth, cleanable, light-colored surface.

b. Walls and ceilings in fabricating and storage areas shall be kept in good repair.

3. DOORS AND WINDOWS

a. All outside openings shall be effectively protected against entry of insects, dust and airborne contamination.

b. All outer doors shall be tight and self-closing.

4. LIGHTING AND VENTILATION

a. All rooms shall be adequately lighted by either natural light, artificial light, or both. A minimum of 20 foot-candles should be maintained in fabricating areas and 5 foot-candles in storage areas. Packaging, sealing, wrapping, labeling and similar procedures are considered part of the fabricating area.

b. Ventilation shall be sufficient to prevent excessive odors and the formation of excessive water condensation.

c. The intake of all pressure ventilation systems in fabricating areas, whether they are positive or exhaust, shall be properly filtered.

5. SEPARATE ROOMS

a. All fabricating areas shall be separate from non-fabricating areas to protect against contamination. Provided, that if the entire plant meets all sanitation requirements and no source of cross contamination exists, separation between areas is not required.

b. All regrinding of plastic and the shredding, packaging or baling of paper trim shall be conducted in rooms separate from the fabricating room except that they may be conducted within a designated area of the fabricating room provided such operations are kept clean and free of dust.

6. TOILET FACILITIES - SEWAGE DISPOSAL

a. Disposal of sewage and other wastes shall be in a public sewage system or in a manner in compliance with state and local regulations.

b. All plumbing shall comply with the state and local plumbing regulations.

c. Toilet rooms shall have solid, self-closing doors and shall not open directly into fabricating areas.

d. The toilet room and fixtures shall be maintained in a clean and sanitary condition and in good repair.

e. Each toilet room shall be well lighted and adequately ventilated. Air ventilation ducts from toilet facilities shall vent to the outside.

f. Proper hand washing facilities shall be provided in toilet rooms.

g. All windows shall be effectively screened when open.

h. Signs shall be posted in all toilet rooms reminding employees to wash hands before returning to work.

i. Eating and/or storage of food is prohibited in toilet rooms.

7. WATER SUPPLY

a. The water supply, if from a public system, shall be approved as safe by the state agency responsible for water quality, and in the case of individual water systems, comply with at least the specifications outlined in Appendix D of the *Grade "A" Pasteurized Milk Ordinance*.

b. There shall be no cross-connection between a safe water supply and any unsafe or questionable water supply or any source of pollution through which the safe water supply might become contaminated.

c. Samples for bacteriological testing of individual water supplies are taken upon the initial approval of the physical structure, each 12 months thereafter, and when any repair or alteration of the water supply system has been made. The examination of the sample shall be conducted in an officially designated laboratory.

8. HAND-WASHING FACILITIES

a. Hot and cold and/or warm running water, soap, air dryers or individual sanitary towels shall be convenient to all fabricating areas. Provided, that solvent or soft soap dispensers containing sanitizers may be used if water is not available. When individual sanitary towels are used, covered trash containers shall be provided.

b. Hand-washing facilities shall be kept clean.

9. PLANT CLEANLINESS

a. The floors, walls, ceilings, overhead beams, fixtures, pipes and ducts of production, storage, regrind, baling and compacting rooms shall be clean.

b. All production areas, warehouse, toilet, lunch and locker rooms shall be free of evidence of insects, rodents, and birds.

c. Machines and appurtenances shall be kept clean. Provided, that minor accumulations of paper, plastic or metal dust and other production soils incidental to normal fabricating operations do not violate this requirement.

10. LOCKER AND LUNCH ROOMS

a. Locker and lunch rooms shall be separate from plant operations and be equipped with self-closing doors.

b. Eating and/or storage of food is prohibited in fabricating and storage areas.

c. Locker and lunch rooms shall be kept in a clean and sanitary condition.

d. Cleanable refuse containers, properly labeled, shall be provided which are covered, impervious, leak-proof and readily accessible.

e. Proper hand washing facilities shall be convenient to locker rooms and lunchrooms.

f. Signs shall be posted reminding employees to wash their hands before returning to work.

11. DISPOSAL OF WASTES

a. All refuse and garbage shall be stored in covered, impervious and leak-proof containers. This requirement does not pertain to production scrap.

b. All waste containers shall be clearly labeled for their intended purpose and contents.

c. Where possible, garbage and assorted rubbish should be stored outside the building in covered, impervious, cleanable containers. If stored inside the building, it must be contained in similar receptacles, but in an area separate from fabricating areas.

12. PERSONAL CLEANLINESS

a. Hands shall be thoroughly washed before commencing plant functions and as often as may be required to remove soil and contamination, and before returning to work after visiting the toilet room or lunchroom.

b. All personnel shall wear clean outer garments and shall wear effective hair restraints, hair nets or caps.

c. No person affected with any disease in a communicable form, or while a carrier of such disease, and no person with an infected cut or lesion shall work in any processing area in any capacity where there is a likelihood of such person contaminating product or product-contact surfaces with pathogenic organisms.

d. The use of tobacco products is prohibited in fabricating, regrind and storage areas.

13. PROTECTION FROM CONTAMINATION

a. Upright, open formed containers and closures shall be protected from contamination by the use of overhead shields.

b. Whenever air under pressure is directed at resin or a product-contact surface, it shall be free of oil, dust, rust, excessive moisture, extraneous materials and odor and shall otherwise comply with the applicable requirements of Appendix H of the *Grade "A" Pasteurized Milk Ordinance.*

c. Air that is directed at product or product-contact surfaces by fans or blowers shall be filtered and shall otherwise comply with the applicable requirements of Appendix H of the *Grade "A" Pasteurized Milk Ordinance*.

d. Only pesticides approved for use in food plants and registered with the U.S. Environmental Protection Agency shall be used for insect and rodent control.

e. Pesticides shall be used in accordance with the manufacturer's directions and used so as to preclude the contamination of containers or closures.

14. STORAGE OF FINISHED PRODUCT AND MATERIAL IN PROCESS

a. Blanks, roll stock and all other single-service containers, closures and articles shall be stored in a manner to provide protection from contamination by use of pallets, slip sheets or other methods and away from any wall a sufficient distance to facilitate inspection, cleaning and pest control activities. Any roll stock having dirty or soiled outer turns and/or edges shall have sufficient turns discarded prior to use and edges trimmed to provide protection from contamination.

b. Single-service articles in process shall be protected from contamination by use of a single-service cover sheet or other protective device. This includes chip board, dividers, separators, bags and other items that can become contact surfaces.

c. Appropriate clean, dry storage facilities shall be provided for single-service containers, closures, paper for wrapping, adhesives, blanks and other production material to provide protection from splash, insects, dust, and other contamination.

d. Where containers and closures are pre-formed in plants other than the original fabricating facility:

1. Containers, blanks and closures shall be stored in the original cartons and sealed until used.

2. Partially used cartons of containers, blanks and closures shall be resealed until used.

e. Containers used for storage of resin, regrind, broke and trim, intended for reuse, shall be covered, clean, impervious and properly identified. Reuse of storage containers, such as gaylords, is permitted provided plastic liners are used.

f. In-process storage bins that touch the product-contact surface of containers or closures shall be constructed of cleanable, nonabsorbent material and kept clean.

15. FABRICATING, PROCESSING AND PACKAGING EQUIPMENT

The requirements of this section pertain to all equipment and processes used in the fabrication of containers and closures irrespective of the materials used and whether or not mentioned herein. Some of this equipment includes grinders, rollers, reamers and cutters, molders and fittings, extruders, silos, resin bins and hoppers, printing equipment, blanking equipment and sealing equipment.

a. Rolls, dies, belts, tables, mandrels, transfer tubing and all other contact surfaces shall be kept clean, sanitary and reasonably free of accumulation of paper, plastic or metal dust and other production soils. Equipment designed for milk plant use which is utilized for preforming containers shall be clean and sanitized prior to operation.

b. All materials in process for containers and closures shall be protected from contamination by condensate or drippage from overhead pipes or equipment components.

c. Makeshift devices such as tape, rope, twine, paperboards, etc., shall not be used. All fasteners, guides, hangers, supports and baffles shall be constructed of impervious, cleanable materials and kept in good repair.

d. Take-off tables and other container contact surfaces shall be constructed of cleanable material, kept clean and in good repair.

e. Waxing shall be performed so as to assure that containers or closures are completely coated and the wax shall be kept at a temperature of 140°F (60°C) or higher.

f. All grinders, shredders and similar equipment used for regrinding shall be installed above the floor or installed in such a manner that they are protected, so that floor sweepings and other contaminants cannot enter the grinder or shredder.

g. Storage tanks, silos, gaylords or bins used for plastic resins shall be so constructed to protect the resin from contamination. All air vents shall be filtered to prevent the entrance of dust or dirt. Air tubes used to conduct resin shall be supported above ground to prevent their becoming submerged in water. Air tubes used to convey resin shall have end caps, attached by chain or cable, that prevent contamination. This section also applies to all raw materials handled in like manner.

16. EQUIPMENT AND MATERIALS FOR CONSTRUCTION OF CONTAINERS AND CLOSURES

a. Single-service containers and closures for milk and milk products shall not be fabricated on equipment used for the manufacture of products made of non-food-grade materials unless such equipment has been thoroughly cleaned and/or purged of all non-food-grade material by a process that will not contaminate the food-grade material.

b. Only plastic sheeting and extrusions, plastic laminated paper, metal and paperboard blanks, or combinations thereof, from a manufacturing and/or fabricating plant conforming with these standards shall be used. Fabricating plants listed in the current IMS publication of "Certified Manufacturers of Single-service Containers and Closures for Milk and Milk Products" shall be considered in compliance with this item.

c. Only sanitary, nontoxic lubricants shall be used on container-closure contact surfaces. Excess lubricant shall be removed from surfaces close to shafts, rollers, bearing sleeves and mandrels. These lubricants shall be handled and stored in a manner that will prevent cross contamination with non-food-grade lubricants. Such storage areas shall be clean and adequately ventilated.

d. The manufacture of single-service containers and closures for milk and milk products shall be carried on in such a manner that there will be no cross contamination of raw material or regrind with non-food-grade materials.

e. Containers, resin and flashing on the floor and floor sweepings of production materials are prohibited from being reused. This shall not preclude the use of these materials when it cmplies with a protocol which has been reviewed and accepted by the FDA.

17. WAXES, ADHESIVES, SEALANTS AND INKS

a. Waxes, adhesives, sealants and inks used for containers and closures shall be handled and stored in a manner that will prevent cross contamination with similar non-food-grade materials. Such storage areas shall be clean and adequately ventilated.

b. Unused materials shall be covered and properly stored.

c. Waxes, adhesives, sealants and inks shall not impart odor or taste to the milk or milk products and shall not contaminate the product with microorganisms or toxic or injurious substances. All materials that are applied to the product-contact surface shall comply with the requirements of Parts 175 through 178 of Title 21 of the Code of Federal Regulations.

d. Transfer containers shall be kept clean and shall be properly identified and covered.

18. HANDLING OF CONTAINERS AND EQUIPMENT

Handling of fabricated containers, and container and closure-contact surfaces shall be kept to a minimum. Handlers shall sanitize their hands frequently or wear clean, single-use gloves.

19. WRAPPING AND SHIPPING

a. Blanks, closures, halves, nested or preformed containers and parts such as valves, hoses, tubes and other fittings shall

be properly packaged or containerized prior to shipping.

b. The outer package or containerized units shall protect the contents from dust and other contamination.

c. Transportation vehicles used to ship finished materials from the single-service container or closure plant or within the plant shall be clean and in good repair and shall not have been used for the transportation of garbage, waste or toxic materials.

d. Paperboard containers, wrappers, and dividers that contact the surface of the container or closure shall not be reused for this purpose.

e. All packaging materials that contact the product-contact surface of the container or closure shall comply with the requirements of Parts 175 through 178 of Title 21 of the *Code of Federal Regulations* and the bacteriological standards of Section "C" of this document, but the material does not have to be manufactured at a listed single-service plant.

20. IDENTIFICATION AND RECORDS

a. Outer wrappings shall be identified with the name and city of the plant where the contents are fabricated, except those manufactured in, and which are only for use in the same facility. In the cases where several plants are operated by one firm, the common firm name may be utilized, provided that the location of the plant at which the contents were fabricated is also shown either directly or by the FIPS numerical code on the outer wrapper.

b. Records of all required bacteriological tests of containers and closures shall be maintained at the plant of manufacture for two years and results shall be in compliance with Section C of these Standards.

c. The fabricating plant shall have on file information from suppliers of raw material, waxes, adhesives, sealants and inks indicating that the material complies with the requirements of Parts 175 through 178 of Title 21 of the *Code of Federal Regulation*.

d. The fabricating plant shall have on file information from the suppliers of packaging materials specified in Section 19e of these Standards indicating that the material complies with the requirements of Parts 175 through 178 of Title 21 of the *Code of Federal Regulation* and the bacteriological standards of Section "C" of this document.

e. Multi-plant corporations may have all required information at a central location as long as it can be transmitted to the site upon request.

21. SURROUNDINGS

a. Exterior surroundings shall be neat and clean and free from conditions which might attract or harbor flies, other insects and rodents.

b. Driveways, lanes and areas serving the plant vehicular traffic are graded, drained and free from pools of standing water.

Department of Health and Human Services **Public Health Service** **Food and Drug Administration**	**MANUFACTURING PLANT INSPECTION REPORT** ***(Single-Service Milk Containers)***	*Form Approved*
		Inspecting Agency

Name and Location of Plant:

1. BUILDINGS AND ROOMS:
Fabricating rooms separate from non-production areas.....(a)_____
Regrinding conducted in separate Room(s).....(b) _____

2. FLOORS:
Smooth; impervious; in good repair; free of litter.....(a) _____
Joints between walls and floors tight(b) _____
Floor drains properly trapped..... (c) _____

3. WALLS AND CEILINGS:
In production areas- smooth, clean light, colored.....(a) _____
Overhead beams, fixtures, pipes, and ducts clean.....(b) _____

4. DOORS AND WINDOWS:
No openings into living quarters ...(a) _____
All outside openings protected against Entrance of insects, dust, and airborne contamination.....(b) _____

5. LIGHTING AND VENTILATION:
Adequate light in all rooms-20 foot candles in Production areas and 5 foot candles in storage areas .....(a) _____
Ventilation sufficient to prevent excessive \odors and condensation.....(b) _____

6. TOILET FACILITIES:
All plumbing complies with State and local plumbing codes .....(a) _____
Self-closing doors on toilet rooms. (b) _____
Clean; in good repair ..... (c) _____
Adequate light and ventilation..... (d) _____

7. WATER SUPPLY:
Safe: Sanitary quality; complies with bacteriological and construction Requirements.....(a) _____
No direct or indirect connection between safe and unsafe water.....(b) _____

8. HAND-WASHING FACILITIES:
Hot and cold or warm running water; soap; individual towels or air dryers provided.....(a) _____
Clean; convenient to fabricating areas and toilet facilities .....(b) _____

9. STORAGE OF MATERIALS AND FINISHED PRODUCTS:
Elevated off the floor and away from wall.....(a) _____
Stored in clean, dry place, protected from splash, insects, and dust .....(b) _____
Where containers and closures are formed in other than original converting facility, blanks stored in original cartons and sealed until used; partially used cartons resealed during storage ..... (c) _____
Containers for reuse materials to be covered, clean and identified.....(d) _____

10. LOCKER AND LUNCHROOMS:
Separated from plant operations; clean; self-closing doors .....(a) _____
Covered, impervious trash containers provided.....(b) _____

11. DISPOSAL OF WASTES:
In public sewer or in sanitary manner; in compliance with State and local regulations.....(a) _____
Refuse properly stored in covered Containers.....(b) _____
Refuse containers properly identified..... (c) _____

12. INSECT AND RODENT CONTROL:
Plant interior free of evidence of insects and rodents .....(a) _____
Surroundings free of harborages and breeding areas .....(b) _____
Approved pesticides; safely used. (c) _____

13. AIR UNDER PRESSURE:
Air under pressure in compliance. (a) _____

14. PERSONNEL CLEANLINESS:
Clean hands .....(a) _____
Clean outer garments; hair restraints.....(b) _____
No person with inadequately treated wounds or lesions working in processing areas(c) _____

15. FABRICATING PROCESSING AND PACKAGING EQUIPMENT:
Contact surfaces clean.....(a) _____
Materials in process protected from contamination; overhead shields used(b) _____
Fasteners, guides, hangers, supports and baffles properly constructed; makeshift devices not Used..... (c) _____
Container contact surfaces properly constructed; in good repair.....(d) _____
Wax coating covers properly; proper wax temperature maintained.....(e) _____
Grinders, shredders and similar equipment properly installed; protected from contaminants..... (f) _____
Resin storage facilities properly constructed; air vents properly filtered; air tubes covered..... (g) _____

16. EQUIPMENT AND MATERIALS FOR CONSTRUCTION OF CONTAINERS AND CLOSURES :
Equipment thoroughly cleaned after use of non-food-grade materials..... (a) _____
Plastic sheeting, laminated paper, metal, and paperboard blanks from approved source..... (b) _____
Sanitary lubricants used on contact Surface.....(c) _____
Proper separation of raw and non-food-grade Materials..... (d) _____

17. WAXES, ADHESIVES, AND INKS :
Properly stored in covered containers(a) _____
Unused materials properly stored (b) _____
Nontoxic; impart no flavor or odor to Product.....(c)_____

18. HANDLING OF CONTAINERS AND EQUIPMENT :
Handling of product-contact surfaces Minimal..... (a) _____

19. WRAPPING AND SHIPPING :
Blanks, closures, halves, nested or preformed containers protected from contamination prior to use or shipping..... (a) _____
Packaged contents properly protected ..... (b) _____
Transportation vehicles clean; in good Repair .....(c) _____
Paper board containers, wrappers and dividers not reused..... (d) _____

20. IDENTIFICATION AND RECORDS :
Individual containers or outer wrappings Identified..... (a) _____
Required bacteriological and chemical Tests on file ..... (b) _____
All materials and components from approved source and records on file .....(c) _____

21. SURROUNDINGS:
Surroundings neat and clean; free from insect or rodent harborages ..... (a) _____
Driveways and lanes graded, drained, free from standing water ..... (b) _____

Remarks:

Date:	Sanitarian:

Note: This form has been developed to use with the *Grade "A" Pasteurized Milk Ordinance*, 1999 Recommendations of the U.S. Public Health Service/Food and Drug Administration

Form FDA 1359c

APPENDIX K. RESERVED FOR FUTURE USE.

APPENDIX L. STANDARDS OF IDENTITY FOR MILK AND MILK PRODUCTS AND *FEDERAL FOOD, DRUG, AND COSMETIC ACT*

The following definitions and standards of identity are contained in the *Code of Federal Regulations, Title 21* unless otherwise noted.

21 CFR 131.3 Cream.
21 CFR 131.110 Milk.
21 CFR 131.111 Acidified Milk.
21 CFR 131.112 Cultured Milk.
21 CFR 131.150 Heavy Cream.
21 CFR 131.155 Light Cream.
21 CFR 131.157 Light Whipping Cream.
21 CFR 131.160 Sour Cream.
21 CFR 131.162 Acidified Sour Cream.
21 CFR 131.170 Eggnog.
21 CFR 131.180 Half-and-Half.
21 CFR 131.200 Yogurt.
21 CFR 131.203 Lowfat Yogurt.
21 CFR 131.206 Nonfat Yogurt.
21 CFR 133.128 Cottage Cheese.
21 CFR 133.129 Dry Curd Cottage Cheese.

21 CFR 130.10
Requirements for Foods Named by Use of a Nutrient Content Claim and a Standardized Term.

Federal Food, Drug, and Cosmetic Act, as amended Sec. 402[342] Adulterated Food

Federal Food, Drug, and Cosmetic Act, as amended Sec. 403[343] Misbranded Food

1 CFR PART 110 - Current Good Manufacturing Practice in Manufacturing, Packing, or Holding Human Food

21 CFR PART 113 - Thermally Processed Foods Packaged In Hermetically Sealed Containers.

21 CFR 113.5
Current Good Manufacturing Practice.

21 CFR 113.10 Personnel.

21 CFR 113.40
Equipment and Procedures.

21 CFR 113.60 Containers.

21 CFR 113.83
Establishing Scheduled Processes.

21 CFR 113.89
Deviations in Processing, Venting, or Control of Critical Factors.

21 CFR 113.100
Processing and Production Records.

21 CFR 173.310
Boiler Water Additives.

21 CFR 101
Food Labeling

APPENDIX M. REPORTS AND RECORDS

The following field reports and office records have been developed for use with the current edition of the *Pasteurized Milk Ordinance.*

Department of Health and Human Services Public Health Service Food and Drug Administration	**MILK PLANT INSPECTION REPORT** (Includes Receiving Stations, Transfer Stations, and Bulk Tank Cleaning Facilities)	Inspecting Agency

Name and Location of Plant:

POUNDS SOLD DAILY : Milk_____
Other Milk Products_____
Total_____
Permit No._____

Inspection of your plant today showed violations existing in the items checked below. You are further notified that this inspection sheet serves as notification of the intent to suspend your permit if the violations noted are not in compliance at the time of the next inspection. (See sections 3 and 5 of the *Grade "A" Pasteurized Milk Ordinance*.)

1. FLOORS:
Smooth; impervious; no pools; good repair; trapped drains.....(a)_____
2. WALLS AND CEILINGS:
Smooth; washable; light-colored; good repair.....(a)_____
3. DOORS AND WINDOWS: All outer openings effectively protected against entry of flies and rodents.....(a)_____
Outer doors self-closing; screen doors open Outward.....(b)_____
4. LIGHTING AND VENTILATION:
Adequate in all rooms.....(a)_____
Well ventilated to preclude odors and condensation; filtered air with pressure systems.....(b)_____
5. SEPARATE ROOMS:
Separate rooms as required; adequate size.....(a)_____
No direct opening to barn or living quarters.....(b)_____
Storage tanks properly vented.....(c)_____
6. TOILET FACILITIES: Complies with local ordinances..(a)_____
No direct opening to processing rooms; self-closing doors.....(b)_____
Clean; well-lighted and ventilated; proper facilities.....(c)_____
Sewage and other liquid wastes disposed of in sanitary Manner.....(d)_____
7. WATER SUPPLY:
Constructed and operated in accordance with Ordinance.....(a)_____
No direct or indirect connection between safe and unsafe Water.....(b)_____
Condensing water and vacuum water in compliance with Ordinance requirements.....(c)_____
Complies with bacteriological Standards.....(d)_____
8. HAND-WASHING FACILITIES:
Located and equipped as required; clean and in good repair; improper facilities not used.....(a)_____
9. MILK PLANT CLEANLINESS: Neat; clean; no evidence of insects or rodents; trash properly handled.....(a)_____
No unnecessary equipment.....(b)_____
10. SANITARY PIPING: Smooth; impervious, corrosion-resistant, non-toxic, easily cleanable materials; good repair; accessible for inspection.....(a)_____
Mechanically cleaned lines meet Ordinance specs.....(b)_____
Pasteurized products conducted in sanitary piping, except as permitted by Ordinance.....(c)_____
11. CONSTRUCTION AND REPAIR OF CONTAINERS AND EQUIPMENT:
Smooth, impervious, corrosion-resistant, non-toxic, easily cleanable materials; good repair; accessible for Inspection.....(a)_____
Self-draining; strainers of approved design.....(b)_____
Approved single-service articles; not reused.....(c)_____
12. CLEANING AND SANITIZING OF CONTAINERS/ EQUIPMENT:
Containers, utensils, and equipment effectively cleaned.....(a)_____
Mechanical cleaning requirements of Ordinance in Compliance; records complete.....(b)_____
Approved sanitization process applied prior to use of product-contact surfaces.....(c)____
Required efficiency tests in compliance.....(d)_____
Multi-use plastic containers in compliance.....(e) ____
Aseptic system sterilized.....(f) ____
13. STORAGE OF CLEANED CONTAINERS AND EQUIPMENT: Stored to assure drainage and protected from contamination.....(a)____
14. STORAGE OF SINGLE-SERVICE ARTICLES:
Received, stored and handled in a sanitary manner; paperboard containers not reused except as permitted by the Ordinance....(a)____
15a. PROTECTION FROM CONTAMINATION: Operations conducted and located so as to preclude contamination of milk, milk products, ingredients, containers, equipment, and utensils.....(a) ____
Air and steam used to process products in compliance with Ordinance.....(b) ____
Approved pesticides, safely used.....(c) ____
15b. CROSS CONNECTIONS: No direct connections between pasteurized and raw milk or milk products.....(a) ____
Overflow, spilled and leaked products or ingredients discarded.....(b) ____
No direct connections between milk or milk products and cleaning and/or sanitizing solutions.....(c)_____
16a. PASTEURIZATION-BATCH:
(1) INDICATING AND RECORDING THERMOMETERS:
Comply with Ordinance Specifications.....(a) ____
(2) TIME AND TEMPERATURE CONTROLS :
Adequate agitation throughout holding; agitator sufficiently submerged.....(a) ____
Each pasteurizer equipped with indicating and recording thermometer; bulb submerged.....(b) ____
Recording thermometer reads no higher than indicating thermometer.....(c) ____
Product held minimum pasteurization temperature continuously for 30 minutes, plus filling time if product preheated before entering vat, plus emptying time, if cooling is begun after opening outlet.....(d) ____
No product added after holding begun.....(e) ____
Airspace above product maintained at not less than 5.0 F higher than minimum required pasteurization temperature during holding.(f) ____
Approved airspace thermometer; bulb not less than 1 inch above product level.....(g)____
Inlet and outlet valves and connections in compliance with Ordinance.....(h) ____
16b. PASTEURIZATION-HIGH TEMPERATURE:
(1) INDICATING AND RECORDING THERMOMETERS:
Comply with Ordinance specifications.....(a) ____
(2) TIME AND TEMPERATURE CONTROLS:
Flow-diversion device complies with Ordinance requirements (a) ____
Recorder controller complies with Ordinance requirements.....(b)____
Holding tube complies with Ordinance requirements.....(c) ____
Flow promoting devices comply with Ordinance requirements.....(d) ____
(3) ADULTERATION CONTROLS: Satisfactory means to prevent adulteration with added water.....(a) ____
16c. ASEPTIC PROCESSING:
(1) INDICATING AND RECORDING THERMOMETERS:
Comply with Ordinance Specifications.....(a) _____
(2) TIME AND TEMPERATURE CONTROLS:
Flow-diversion device complies with Ordinance requirements.(a) _____
Recorder controller complies with Ordinance Requirements....(b) _____
Holding tube complies with Ordinance requirements.....(c) _____
Flow promoting devices comply with Ordinance requirements.....(d) _____
(3) ADULTERATION CONTROLS:
Satisfactory means to prevent adulteration with added water....(a) _____
16d. REGENERATIVE HEATING: Pasteurized or aseptic product in regenerator automatically under greater pressure than raw product in regenerator at all times.....(a) _____
Accurate pressure gauges installed as required; booster pump properly identified and installed.....(b) _____
Regenerator pressures meet Ordinance Requirements.....(c) _____
16e. RECORDING CHARTS:
Batch pasteurizer charts comply with applicable Ordinance Requirements.....(a) _____
HTST & HTST pasteurizer charts comply with applicable Ordinance Requirements.....(b) _____
Aseptic charts comply with applicable Ordinance Requirements.....(c) _____
17. COOLING OF MILK: Raw milk maintained at 45 F or less until processed.....(a)_____
Pasteurized milk and milk products, except those to be cultured, cooled immediately to 45 F or less in approved equipment; all milk and milk products stored thereat until delivered.....(b) ____
Approved thermometer properly located in all refrigeration rooms and storage tanks.....(c) _____
Recirculated cooling water from safe source and properly protected; complies with bacteriological standards.....(d) _____
18. BOTTLING AND PACKAGING: Performed in a plant where contents finally pasteurized.....(a) _____
Performed in a sanitary manner by approved mechanical equipment.....(b) ___
Aseptic filling in compliance.....(c) _____
19. CAPPING: Capping and/or closing performed in sanitary manner by approved mechanical Equipment.....(a) _____
Imperfectly capped/closed products properly handled.....(b) _____
Caps and/or closures comply with Ordinance.....(c) _____
20. PERSONNEL CLEANLINESS: Hands washed clean before performing plant functions; rewashed when contaminated.....(a) _____
Clean outer garments and hair covering worn.....(b) _____
No use of tobacco in processing areas.....(c) _____
21. VEHICLES: Vehicles clean; constructed to protect milk...(a) _____
No contaminating substances transported.....(b) _____
22. SURROUNDINGS: Neat and clean; free of pooled water, harborages, and breeding areas.....(a) _____
Tank unloading areas properly constructed.....(b) _____
Approved pesticides, used properly.....(c) _____

Remarks:

Date: Sanitarian:

1. A receiving station shall comply with Items 1 to 15, inclusive, and 17, 20, and 22. Separation requirements of item 5 do not apply.
2. A transfer station shall comply with Items 1, 4, 6, 7, 8, 9, 10, 11, 12, 13, 14, 15, 20, 22 and as climatic and operating conditions require, applicable provisions of Items 2 and 3. In every case, overhead protection shall be required.
3. Facilities for the cleaning and sanitizing of bulk transport tanks shall comply with the same requirements for transfer stations.

NOTE – Item numbers correspond to required sanitation items for Grade "A" pasteurized milk in the *Grade "A" Pasteurized Milk Ordinance*.

Department of Health and Human Services Public Health Service Food and Drug Administration	DAIRY FARM INSPECTION REPORT	Inspecting Agency

NAME AND LOCATION OF DAIRY FARM

POUNDS SOLD DAILY:
PLANT:
PERMIT #:

Inspection of your farm today showed violations existing in the items checked below. You are further notified that this inspection sheet serves as notification of the intent to suspend your permit if the violations noted are not in compliance at the time of the next inspection. (See Sections 3 and 5 of the *Grade "A" Pasteurized Milk Ordinance.*

COWS

1. **Abnormal Milk** :
Cows secreting abnormal milk milked last or in separate equipment.....(a) _____
Abnormal milk properly handled and disposed of .....(b) _____
Proper care of abnormal milk handling Equipment .....(c) _____

MILKING BARN, STABLE, OR PARLOR

2. **Construction** :
Floors, gutters, and feed troughs of concrete or equally impervious materials; in good repair .....(a) _____
Walls and ceilings smooth, painted or finished adequately; in good repair; ceiling dust-tight .....(b) _____
Separate stalls or pens for horses, calves, and bulls no overcrowding.....(c) _____
Adequate natural and/or artificial light; well distributed.....(d) _____
Properly ventilated; .....(e) _____

3. **Cleanliness** :
Clean and free of litter .....(a) _____
No swine or fowl .....(b) _____

4. **Cowyard** :
Graded to drain; no pooled water or wastes ..(a) _____
Cowyard clean; cattle housing areas & manure packs properly maintained.....(b) _____
No swine.....(c) _____
Manure stored inaccessible to cows .....(d) _____

MILKHOUSE OR ROOM

5. **Construction and Facilities** :

Floors
Smooth; concrete or other impervious material; in good repair .....(a) _____
Graded to drain .....(b) _____
Drains trapped, if connected to sanitary system.....(c) _____

Walls and Ceilings
Approved material and finish .....(a) _____
Good repair (windows, doors, and hoseport included) .....(b) _____

Lighting and Ventilation
Adequate natural and/or artificial light; properly distributed.....(a) _____
Adequate ventilation .....(b) _____
Doors and windows closed during dusty weather .....(c) _____
Vents and lighting fixtures properly installed(d) _____

Miscellaneous Requirements
Used for milkhouse operations only; sufficient size .....(a) _____
No direct opening into living quarters or barn, except as permitted by Ordinance ..... (b) _____
Liquid wastes properly disposed of..... (c) _____
Proper hoseport where required..... (d) _____
Acceptable surface under hoseport ..... (e) _____
Suitable shelter for transport truck as required by this Ordinance ..... (f) ____

Cleaning Facilities
Two-compartment wash and rinse vat of adequate size..... (a) _____
Suitable water heating facilities..... (b) _____
Water under pressure piped to milkhouse..... (c) _____

6. **Cleanliness :**
Floors, walls, windows, tables, and similar non-product-contact surfaces clean ..... (a) _____
No trash, unnecessary articles, animals or fowl..... (b) _____

TOILET AND WATER SUPPLY

7. **Toilet :**
Provided; conveniently located..... (a) _____
Constructed and operated according to *Ordinance* ..... (b) _____
No evidence of human wastes about premises(c) _____
Toilet room in compliance with *Ordinance* .. (d) _____

8. **Water Supply :**
Constructed and operated according to *Ordinance* ..... (a) _____
Complies with bacteriological standards..... (b) _____
No connection between safe and unsafe supplies; no improper submerged inlets;..... (c) _____

UTENSILS AND EQUIPMENT

9. **Construction :**
Smooth, impervious, nonabsorbent, safe materials; easily cleanable; ..... (a) _____
In good repair; accessible for inspection ..... (b) _____
Approved single-service articles; not reused. (c) _____
Utensils and equipment of proper design ..... (d) _____
Approved mechanically cleaned milk pipeline system..... (e) _____

10. **Cleaning :**
Utensils and equipment clean ..... (a) _____

11. **Sanitization :**
All multi-use containers and equipment subjected to approved sanitization process (See *Ordinance*)(a) _____

12. **Storage :**
All multi-use containers and equipment properly stored..... (a) _____
Stored to assure complete drainage, where applicable ..... (b) _____
Single-service articles properly stored..... (c) _____

MILKING

13. **Flanks, Udders, and Teats :**
Milking done in barn, stable, or parlor..... (a) _____
Brushing completed before milking begun.... (b) _____
Flanks, bellies, udders, and tails of cows clean at time of milking; clipped when required..... (c) _____
Teats cleaned, treated with sanitizing solution and dry, prior to milking..... (d) _____
No wet hand milking..... (e) _____

TRANSFER AND PROTECTION OF MILK

14. **Protection From Contamination :**
No overcrowding.....(a) _____
Product and CIP circuits separated.....(b) _____
Improperly handled milk discarded .....(c) _____
Immediate removal of milk.....(d) _____
Milk and equipment properly protected.....(e) _____
Sanitized milk surfaces not exposed to Contamination .....(f) _____
Air under pressure of proper quality .....(g) _____

15. Drug and Chemical Control
Cleaners and sanitizers properly identified.....(a) _____
Drug administration equipment properly handled and stored .....(b) _____
Drugs properly labeled (name and address) and Stored.....(c) _____
Drugs properly labeled (directions for use, Cautionary statements, active ingredient).....(d) _____
Drugs properly used and stored to preclude Contamination of milk .....(e) _____

PERSONNEL

16. **Hand-Washing Facilities :**
Proper hand-washing facilities convenient to milking operations .....(a) _____
Wash and rinse vats not used as hand-washing facilities.....(b) _____

17. **Personnel Cleanliness :**
Hands washed clean and dried before milking, or performing milk house functions; rewashed when contaminated .....(a) _____
Clean outer garments worn .....(b) _____

COOLING

18. **Cooling :**
Milk cooled to 45 F or less within 2 hours after milking, except as permitted by *Ordinance*.....(a) _____
Recirculated cooling water from safe source and properly protected; complies with bacteriological standards..... (b) _____

PEST CONTROL

19. **Insect and Rodent Control :**
Fly breeding minimized by approved manure disposal methods (See *Ordinance*)..... (a) _____
Manure packs properly maintained .....(b) _____
All milkhouse openings effectively screened or otherwise protected; doors tight and self-closing; screen doors open outward .....(c) _____
Milkhouse free of insects and rodents .....(d) _____
Approved pesticides; used properly .....(e) _____
Equipment and utensils not exposed to Pesticide contamination.....(f) _____
Surroundings neat and clean; free of harborages and breeding areas.....(g) _____
Feed storage not attraction for birds, Rodents or insects .....(h) _____

Remarks:

Date:	Sanitarian:

Note: Item numbers correspond to required sanitation items for Grade "A" raw milk for pasteurization in the *Grade "A" Pasteurized Milk Ordinance*.

FORM FDA 2359a

Department of Health and Human Services Public Health Service / Food and Drug Administration				MILK PLANT EQUIPMENT TEST REPORT	
TEST NO.	TEST		TEST FREQUENCY	TESTED (X or NA)	RESULTS OF TEST (SEE REVERSE FOR WORKING NOTES)
1.	Indicating thermometers (including air space): Temperature accuracy		3 months		
2.	Recording thermometers: Temperature accuracy		3 months		
3.	Recording thermometers: Time accuracy		3 months		
4.	Recording thermometers: Checked against indicating thermometer		3 months		Daily by operator
5.	Flow-diversion device: Proper assembly and function (HTST and HHST)				
	5.1	Leakage past valve seat(s)	3 months		
	5.2	Operation of valve stem(s)	3 months		
	5.3	Device assembly (micro-switch) single stem	3 months		
	5.4	Device assembly (micro-switches) dual stem	3 months		
	5.5	Manual diversion - Parts (A,B, and C) (HTST only)	3 months		
	5.6	Response Time	3 months		
	5.7	Time delay interlock (dual stem devices) (Inspect)	3 months		
	5.8	Time delay interlock (dual stem devices) (CIP)	3 months		
	5.9	Leak Detect flush time delay (HTST only as applicable)	3 months		
6.	Leak-protect valves: Leakage (Vats only)		3 months		
7.	Indicating thermometers in pipelines: Thermometric response (HTST only)		3 months		
8.	Recorder-Controller: Thermometric response (HTST only)		3 months		
9.	Regenerator Pressure Controls				
	9.1	Pressure Switches (HTST only)	3 months		
	9.2	Differential pressure controllers			
	9.2.1	Calibration	3 months		
	9.2.2	Interwiring Booster Pump (HTST only)	3 months		
	9.2.3	Interwiring FDD (HHST and Aseptic)	3 months		
	9.3	Additional Booster Pump interwiring (HTST only)			
	9.3.1	With FDD	3 months		
	9.3.2	With Metering Pump	3 months		
10.	Milk-flow controls: Cut-in and cut-out temperatures (10.1, 10.2, or 10.3)		3 months		Daily by operator (HTST)
11.	Timing System Controls				
	11.1	Holding time (HTST except magnetic flow meters)	6 months		Adjusted holding time if applicable
	11.2.a	Magnetic Flow Meters (HTST only)	6 months		
	11.2.b	Flow alarm (HTST, HHST, and Aseptic)	6 months		
	11.2.c	Loss of signal alarm (HTST, HHST, and Aseptic)	6 months		
	11.2.d	Flow cut-in/cut-out (HTST only)	6 months		
	11.2.e	Time delay (After divert) (HTST only)	6 months		
	11.3	HHST Indirect heating	6 months		
	11.4	HHST Direct Injection Heating	6 months		
	11.5	HHST Direct Infusion heating	6 months		
12.	Controller: Sequence logic (HHST and Aseptic) (12.1 or 12.2)		3 months		
13.	Product pressure-control switch setting (HHST and Aseptic)		3 months		
14.	Injector differential pressure (HHST and Aseptic) (Injection heating)		3 months		
Remarks					

PLANT	IDENTITY OF EQUIPMENT	LOCATION	DATE	SANITARIAN

NOTE: This form is a supplement to the Milk Plant Inspection Report FDA 2359, and these tests are in addition to the equipment requirements for which compliance is determined by inspection. See Appendix I, *Grade "A" Pasteurized Milk Ordinance*.

FORM FDA 2359b

APPENDIX N. DRUG RESIDUE TESTING AND FARM SURVEILLANCE

I. INDUSTRY RESPONSIBILITIES

A. Monitoring and Surveillance.

Industry shall screen all bulk milk pickup tankers for beta lactam drug residues. Additionally, other drug residues shall be screened for by employing a random sampling program on bulk milk pickup tankers. The random bulk milk pickup tanker sampling program shall represent and include, during any consecutive six months, at least four (4) samples collected in at least four (4) separate months, except when three months show a month containing two sampling dates separated by at least 20 days. Samples collected under this random sampling program shall be analyzed as specified by FDA. (See M-a-75).

Bulk milk pickup tanker testing shall be completed prior to processing the milk. Industry samplers shall be evaluated according to the requirements specified in Section 6: The Examination of Milk and Milk Products. Bulk milk pickup tanker samples found to be positive for drug residues shall be retained as determined necessary by the regulatory agency. Industry shall also record all sample results and retain such records for a period of six months.

B. Reporting and Farm Traceback.

When a bulk milk pickup tanker is found to be positive for drug residues, the regulatory agency shall be immediately notified of the results and the ultimate disposition of the raw milk.

The producer samples from the bulk milk pickup tanker, found to be positive for drug residues, shall be individually tested to determine the farm of origin. The samples shall be tested as directed by the regulatory agency.

Further pickups of the violative individual producer shall be immediately discontinued, until such time, that subsequent tests are no longer positive for drug residues.

II. REGULATORY AGENCY RESPONSIBILITIES

A. Monitoring and Surveillance.

State regulatory agencies shall monitor industry surveillance activities by making unannounced, on-site inspections to collect samples from bulk milk pickup tankers and to review industry records of the random sampling program. A review shall include, but not be limited to, the following:

1. Is the program an appropriate routine monitoring program for the detection of drug residues? Is the program utilizing appropriate test methods?
2. Is each producer's milk represented in a testing program for drug residues and tested at the frequency prescribed in I. A. above for drug residues?
3. Is the program assuring timely notification to the appropriate regulatory agency of positive results, the ultimate disposition of the bulk milk pickup tanker milk and of the trace back to the farm of origin? Is farm pickup suspended until subsequent testing establishes the milk is no longer positive for drug residues?

The regulatory agency shall also perform routine sampling and testing for drug residues determined to be necessary as outlined in Section 6 and M-a-75.

B. Enforcement.

If testing reveals milk positive for drug residues, the milk shall be disposed of in a manner that removes it from the human or animal food chain, except where acceptably reconditioned under FDA compliance policy guidelines. The regulatory agency shall determine the producer responsible for the violation.

Suspension. – Any time milk is found to test positive for a drug residue, the regulatory agency shall immediately suspend the producer's Grade "A" permit or equally effective measures shall be taken to prevent the sale of milk containing drug residues.

Penalties.—Future pick-ups are prohibited until subsequent testing reveals the milk is free of drug residue. The penalty shall be for the value of all milk on the contaminated load plus any costs associated with the disposition of the contaminated load. The State Regulatory Authority may accept certification from the violative producer's milk marketing cooperative or purchaser of milk as satisfying the penalty requirements.

Reinstatement.—The Grade "A' producer permit may be reinstated, or other action taken, to allow sale of milk for human food, when a representative sample taken from the producer's milk, prior to commingling with any other milk, is no longer positive for drug residue.

Follow-Up.—Whenever a drug residue test is positive an investigation shall be made to determine the cause:

Farm inspection is completed by the regulatory agency or its agent to determine the cause of the residue and actions taken to prevent future violations including:

(a) On farm changes in procedures necessary to prevent future occurrences as recommended by the state regulatory agency.
(b) Discussion and education on the Drug Residue Avoidance Control measures outlined in Appendix C.

Permit Revocation: After a third violation in a 12 month period the regulatory agency shall initiate administrative procedures pursuant to revocation of the producer's Grade "A" permit under the authority of "Section 3, Permits", due to repeated violations.

Reinstatement: The producer permit may be reinstated, or other such similar action taken, to allow sale of milk for human food, when a representative sample taken from the producer's milk, prior to commingling with any other milk, is no longer positive for drug residue.

III. ESTABLISHED TOLERANCES AND/OR SAFE LEVELS OF DRUG RESIDUES

"Safe levels" are used by FDA as guides for prosecutorial discretion. They do not legalize residues found in milk that are below the safe level. In short, FDA uses the "safe levels" as prosecutional guidelines and in full consistency with CNI v. Young stating, in direct and unequivocal language, that the "safe levels" are not binding -- that they do not dictate any result, that they do not limit the agency's discretion in any way, and

that they do not protect milk producers (or milk) from court enforcement action.

"Safe levels" are not and cannot be transformed into tolerances that are established for animal drugs under section 512 (b) of the *Federal Food, Drug, and Cosmetic Act* as amended . "Safe levels" do not (1) bind the courts, the public (including milk producers), or the agency (including individual FDA employees), and (2) do not have the "force of law" of tolerances (or of binding rules).

Notification, changes or additions of "safe levels" will be transmitted via Memoranda of Information (M-I's).

IV. Approved Methods

AOAC First Action and AOAC Final Action methods are accepted in accordance with Section 6. Drug residue detection methods shall be evaluated at the safe level or tolerance. Regulatory action based on each test kit method may be delayed until the evaluation is completed and the method is found to be acceptable to FDA and complies with the provisions of Section 6.

One year after test(s) have been evaluated by FDA and accepted by the NCIMS for a particular drug or drug family, other unevaluated tests are not acceptable for screening milk. The acceptance of evaluated tests does not mandate any additional screening by industry with the evaluated method.

APPENDIX O. VITAMIN FORTIFICATION OF FLUID MILK PRODUCTS

PROCESS/METHODS OF VITAMIN ADDITION

Vitamin fortification can be accomplished by the addition of vitamins at many different points in the processing system, preferably after separation, including the pasteurizing vat (for vat pasteurization), to the HTST balance tank, or on a continuous basis into the pipeline after standardization and prior to pasteurization in accordance with the manufacturer's recommendations. Both batch addition and addition with metering pumps can be used. The batch procedure requires accurate measurement of the volume of milk to be fortified, accurate measurement of the vitamin concentrate, and proper mixing. When a vitamin metering pump(s) is used with an HTST unit or an HHST unit the pump(s) must be installed so as to be activated only when the unit is sending product forward. The addition of vitamins must be accomplished prior to pasteurization in accordance with the manufacturer's recommendations.

The problem of under fortification is often related to the point in the system where fortification takes place. Vitamins A and D are fat soluble and will gradually become more concentrated in the milk fat portion of the milk. Both oil and water base vitamins are susceptible to this migration problem.

If vitamins are added in the proper amount before separation and standardization, and the product is separated and standardized, then the low fat product will tend to be under fortified and the high fat product over fortified. Water soluble vitamin concentrates can minimize this problem if vitamins are added before separation. Processors who use this procedure should perform confirmatory assays to ensure proper fortification levels of each product.

Many HTST systems are now being used with in-line fat standardization which also makes possible switching without stopping from products being fortified with Vitamin D to those being fortified with both A and D. These systems require metered injection of the proper vitamins at a point after standardization and before pasteurization. Sanitary positive displacement pumps are available for this purpose.

There are two types available, one is a piston type positive displacement metering pump without valves. It is equipped with a micrometer, which allows accurate and reproducible amounts of vitamins to be added based on the rate of product flow through the system.

The other type metering pump also is a positive displacement or peristaltic pump which offers precise control. This is because volume can be controlled by the size of tubing used and pump speed. This is easy to clean because only the tube is in contact with the vitamin concentrates. These pumps also have a history of reproducibility and reliability. All metering pumps should be designed specifically to conform with this Ordinance as recommended by equipment employed in sanitary applications.

The recommended point for metered injection of vitamin concentrate is after separation and prior to homogenization. This allows the homogenization process to distribute the vitamins throughout the milk. A positive displacement metering pump and a check valve for in-line injection are recommended. The check valve will prevent contamination of the vitamin concentrate with milk.

When vitamin A, A & D or D concentrates are injected by metering pumps,

separate positive pressure pumps with separate delivery tubing and check valves are recommended. (See Figure 46 for an example of such an arrangement.) Pumps should be calibrated based on the product flow rate of the continuous pasteurization system. If flow rates change for different milk products, additional vitamin pumps may be needed. Adjusting calibration of vitamin metering pumps is not recommended without verifying the adjusted calibration is accurate. Calibration checks of vitamin metering pumps should be done on a routine basis.

Essential to proper results are the following:

(1) Management must be committed to proper fortification and concerned with both over and under levels.

(2) Design the system correctly for proper addition in which concentrate is added after standardization and before pasteurization.

(3) Written procedures and training should be provided to all employees responsible for vitamin fortification for each product to be fortified. These procedures should focus on product start up and product change over.

(4) Keep accurate records of vitamins used and products produced, checked daily against theoretical use. Care should be taken that adequate fortification of small run products like skim milk is not masked by much larger volumes of 2% or other partly skimmed milk products.

METERING PUMPS

(5) Use an accurate, sanitary, positive displacement metering pump with a scheduled cleaning procedure after use. For batch addition, use only accurate, calibrated measuring devices, such as plastic graduated cylinders, or pipettes. Measuring devices should be sized to the amount of concentrate added, i.e. if 8 ml. is added, a 10 ml. graduated cylinder would be appropriate. Measuring devices should be rinsed with the product being fortified to insure no residual concentrate is left.

(6) Use a check valve on the injection line to prevent milk from being pushed back into the line. This depends on pump displacement.

(7) Check meter calibration regularly including both the pump and the tubing by determining delivery rate accuracy. Use only properly calibrated tubing for peristaltic pump systems and replace tubing regularly.

(8) Storage vessels used for supplying vitamin concentrate to metering pumps should be emptied on a regular basis. A regular systematic cleaning and sanitizing schedule must be maintained for these vessels, pumps and tubing.

(9) Vitamin concentrates should be stored and held in accordance with the manufacturer's recommendations for maximum shelf life.

(10) Vitamin metering pumps should be interwired with the flow divert and recycle valves to prevent operation during divert and/or recycle flows.

(11) Check finished products regularly. Results should be reported in International Units (I.U.)/Quart. Because of the sensitivity and difficulty in performing these tests, it is necessary to procure the services of a competent laboratory, one that is familiar with the handling and testing of vitamin fortified dairy products.

(12) Care must be taken when reprocessing reclaimed product so vitamin A and/or D levels do not exceed the label claims by more than 150%.

GOOD MANUFACTURING PRACTICES

Good manufacturing practices require that the vitamin A & D levels not be less than 2000 International Units per quart of vitamin A and 400 International Units of vitamin D. Fluid dairy products are allowed not less than 100% and not more than 150% of required values or label claims to be in compliance with good manufacturing practices.

TESTING METHODS

Test methods used for the detection of vitamins A and/or D[3] shall be those acceptable the Food and Drug Administration or other official methodologies which give statistically equivalent results to the FDA methods. Vitamin analysis shall be conducted in a laboratory accredited by the Food and Drug Administration and acceptable to the regulatory agency.

TYPE OF CONCENTRATES AVAILABLE

A number of different types of concentrates are available. All contain vitamin D and/or vitamin A palmitate with a carrier consisting of any of the following: butter oil, corn oil, evaporated milk, non-fat dry milk, polysorbate 80, propylene glycol and glycerol monooleate. It is best to store all concentrates under refrigeration unless manufacturer directions indicate otherwise. To achieve adequate dispersion viscous concentrates should be brought to room temperature before addition.

NEED FOR ADDITION

Vitamin A is fat soluble, that is it will dissolve when mixed with fat and will not dissolve in water. For this reason Vitamin A is found in whole milk and to a lesser degree in low fat and absent in non-fat milk, unless these products are fortified.

Vitamin D is the major regulator of calcium absorption in the intestine. Fortification of fresh milk with Vitamin D, is acknowledged to have virtually eliminated rickets in milk drinking children. Since normal levels of Vitamin D are necessary for optimal calcium absorption in children, it is also known that these levels are required as one increases in age. It has been associated with reducing the incidence of osteoporosis in premenopausal women.

Vitamin A performs many functions. One is to enable the retina of the eye to respond to dim light. Deficiency of Vitamin A produces night blindness. Vitamin A is also involved in the ability of the eye to discern color.

Vitamin A and D can be a potential threat to public health if consumed at excessive levels. Over fortification with levels of Vitamin A over 6,000, and Vitamin D over 800 should be considered harmful; therefore it is necessary to accurately control the proper level of fortification.

PROBLEMS INVOLVED WITH FORTIFICATION

Milk and milk products which contain a large proportion of fat are relatively good dietary sources of Vitamin A, but as is the case with other natural foods, the Vitamin D content of unfortified milk is quite low. As with other milk components, Vitamin A & D levels are affected by breed, season, diet,

lactation and in the case of Vitamin D animal exposure to sunlight.

In general when lactating animals are transferred from pasture to winter rations in the fall, a decline in the Vitamin A & D levels can be expected in the raw milk. This occurs slowly through the winter season until the animals are once more on pasture in the spring. With proper selection of feed and diet concentrates this effect can be kept to a minimum. Natural levels of Vitamin A range from 400 I.U. in winter to 1200 I.U. in summer, and Vitamin D, 5 I.U. in winter to 40 I.U. in summer. These are approximate ranges to indicate possible seasonal variations. Because of seasonal and other variations in natural vitamin levels it is necessary to monitor the level of fortification to assure that levels are within good manufacturing practices.

Vitamin concentrate potency degrades with time. Concentrates should be stored in accordance with manufacturer's recommendation to maintain label potency. Vitamin concentrate potency should be verified by the vitamin supplier.

Vitamin D is very stable in homogenized whole milk and is not affected by pasteurization or other processing procedures. Vitamin D in fortified homogenized whole milk will remain constant with little or no loss of vitamin potency during long periods of proper storage. No loss of vitamin D will be experienced under normal shelf life periods.

Vitamin A and D fortified skim milk products are subject to decreases in vitamin A, because the vitamin is no longer protected by fat as it is in whole milk. In fluid skim or low fat milk, added vitamin A deteriorates gradually during normal storage of the milk at 4.4°C (40°F.) in the dark but is destroyed rapidly when the milk is exposed to sunlight in transparent glass bottles or translucent plastic containers. The photo destruction of added vitamin A is dependent on the intensity and wave length of light and milk source. The use of amber or brown glass bottles, pigmented plastic containers formulated with specific light barriers and colored paper cartons retard this destruction. Vitamin A losses in 2% milk from five dairy plants ranged from 8% to 31% when they were exposed to 200 foot candles of fluorescent light for 24 hours in opaque plastic containers. Use of pigmented containers or gold shields over fluorescent tubes practically eliminated these losses.

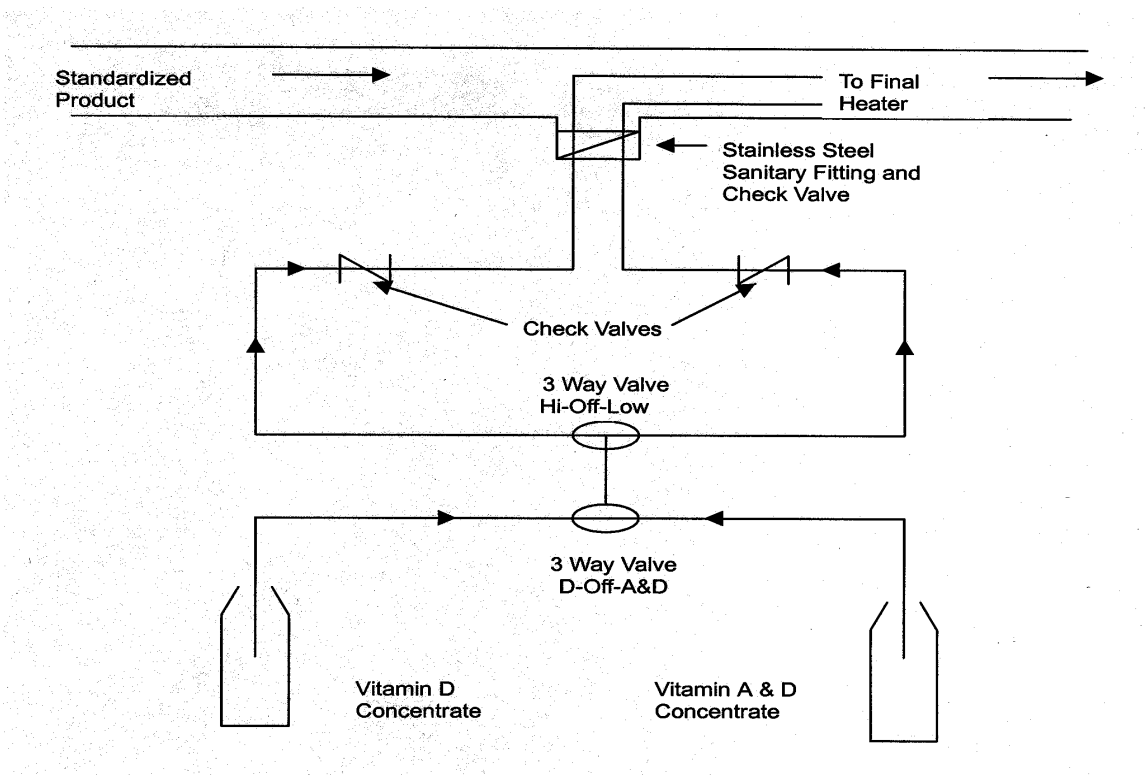

Figure 46. Vitamin Fortification

Problems associated with natural levels, loss of vitamin A during storage and the problems with the mechanical addition discussed in the following section of this guideline indicate the difficulty in providing a product that will have proper potency levels.

NOTE: Figure 46 details a two speed vitamin fortification installation using two pumps and two vitamin concentrate sources. This enables changing from different vitamin concentrates and different speed pumps via the adjustment of three-way valves.

Recommendations:

1. Use sanitary check valve(s) to separate milklines from vitamin concentrates.
2. Keep all milk contact surfaces of sanitary design that are easily cleanable and available for inspection.

APPENDIX P. PERFORMANCE-BASED DAIRY FARM INSPECTION SYSTEM

I. Preface

A performance-based inspection system is an option to traditional routine inspection frequency (at least once every 6 months) on Grade "A" dairy farms. This option provides states with a choice. For some states, inspecting every farm routinely twice a year may provide effective regulatory oversight and make efficient use of inspection resources. In other states, however, an optional system which determines routine farm inspection frequency based on producer milk quality and inspection performance may be more desirable, equally effective, and make the most efficient use of limited inspection resources. The overall inspection effort devoted to a performance-based farm inspection system may be more or less than the traditional inspection system which requires a routine inspection at least once every 6 months per farm.

II. Inspection Interval and Criteria

Dairy farms will be categorized at least every 3 months using the immediately previous 12 months farm inspection and milk quality data. The following criteria will be used to categorize farms into 4 inspection intervals as defined below.

<u>Minimum 1 year inspection interval (1 inspection each 12 months)</u>
(All criteria below must have been met for the previous 12 months).

1. All SPC $\leq$ 25,000
2. All SCC $\leq$ 500,000
3. No temperature violations
4. No drug residue violations
5. No "critical control point" violations observed during farm inspections

Dairy Farm inspection report items numbered:

- 10, 11-Cleaning and sanitizing of milk contact surfaces
- 15(c), (d) and (e)-Significant drug violations
- 18-Significant cooling violations

6. No violation which creates a substantial risk of adulteration or imminent health hazard
7. No more than 5 violations documented on any inspection sheet
8. No consecutive inspection violations on any inspection item.
9. No record of suspended permit, certification or license due to inspection, milk quality or drug residue deficiencies.
10. Bacteriologically safe water supply at time of categorization

NOTE: Farms in this category who are recategorized to a 6 month inspection interval for a single violation of one milk quality parameter (SPC > 25,000, SCC > 500,000 or temperature violation) may be recategorized to the 1 year inspection interval if all 10 criteria listed above are met for the next 6 months.

<u>Minimum 6 month inspection interval (1 inspection each 6 months)</u>
(All criteria below must have been met for the previous 12 months).

1. May have 1 or more SPC > 25,000
2. May have 1 or more SCC > 500,000
3. No more than 1 warning letter issued due to non-compliance of 2 out of 4 previous official sample results for SPC and SCC
4. No temperature violations
5. No drug residue violations
6. No "critical control point" violations observed during farm inspections

Dairy Farm inspection report items numbered:

- 10, 11-Cleaning and sanitizing of milk contact surfaces
- 15(c), (d) and (e)-Significant drug violations
- 18-Significant cooling violations

7. No violation which creates a substantial risk of adulteration or imminent health hazard
8. No more than 5 violations documented on any inspection sheet
9. No consecutive inspection violations on any inspection item.
10. No record of suspended permit, certification or license due to inspection, milk quality or drug residue deficiencies.
11. Bacteriologically safe water supply at time of categorization

NOTE: Farms meeting the criteria for 1 year or 6 month inspection intervals but with less than 12 months of farm inspection and milk quality history (i.e. new farms) will be assigned to 6 month inspection intervals.

<u>Minimum 4 month inspection interval (1 inspection each 4 months)</u>
(Any criteria below results in farm being placed into this inspection interval for 12 months from the next recategorization).

1. More than 1 warning letter issued due to non-compliance of 2 out of 4 previous official sample results for SPC and SCC
2. Farm conditions which caused the regulatory agency to take official regulatory action (i.e., warning letter, intent to suspend, reinspection etc.)
3. 1 drug residue violation
4. "Critical control point" violations observed during farm inspections

Dairy Farm inspection report items numbered:

- 10, 11-Cleaning and sanitizing of milk contact surfaces
- 15(c), (d) and (e)-Significant drug violations
- 18-Significant cooling violations

5. Violation which creates a substantial risk of adulteration or imminent health hazard
6. More than 5 violations on any inspection
7. Unsafe water supply at the time of categorization

<u>Minimum 3 month inspection interval (1 inspection each 3 months)</u>
(Any criteria below results in farm being placed into this inspection interval for 12 months from the next recategorization).

1. More than 1 drug residue violation
2. Any farm suspended from the market by the regulatory agency during the evaluation period (previous 12 months) for any reason other than drug residue violations.
3. More than 1 incident where violative farm conditions or milk quality parameters caused the regulatory agency to take official regulatory action (i.e., warning letter, intent to suspend, reinspection, etc.)

NOTE: The above guidelines for Grade "A" farm inspection intervals are not intended to prevent farm inspections at more frequent intervals if in the judgement of the inspection staff more frequent intervals are necessary.

INDEX

Page

3-A Sanitary Standards 31, 50, 102, 231
Abnormal milk 17, 20, 95, 162
Abnormal milking equipment
  equipment and utensils 20
Accredited areas (tuberculosis) 86
Acidified milk, definition 255
Acidified sour cream, definition 255
Adulterated food 255
Adulterated milk and milk products
  examination of 15, 261
  impounding 5
  insecticides 20
  prevention of, by added water (HTST) 70
  sale of 1
Agitation (vat pasteurization) 61
Agitation, air 34, 35, 56
Agitation, sampling 98
Air under pressure 35, 56, 178, 247
Airspace heating 62, 184
Airspace thermometers 77, 204
American Association of Medical Milk Commissions Inc 88
Animal disease 86
Animal disease control 86, 95
Animal drug labeling 35
Animals other than cows in dairy barn 22, 23
Appendix N
  Drug Residue Testing 261–63
Aseptically processed
  controlling added water 72
  cooling 81
  examination of 14, 15
  imminent hazard 10, 12, 15
  labeling 7, 8
  resterilized after contamination 50
Automatic flow controls 64, 171, 178
Bacteria, deactivation or removal 18
Bacterial counts
  3-out-of-5 compliance 16, 161
  Commingled milk 19
  containers 52, 243
  cultured products 19
  enforcement procedures 15, 16
  frequency 15
  laboratory techniques 16
  sampling 15, 17
Bacterial Counts 14–18
Bacterial tests
  milk and milk products 15, 19
  raw milk for pasteurization 19
Bactericidal efficiency 139
Batch pasteurization 4, 60, 61, 77, 185

Boiler Feed Water Additives
21CFR 173.310 183
Booster pump
determining maximum pressures 216
general 75–76, 171, 178, 215–21
impeller identification 75
pressure switches to control 75–76, 171, 215–21
time delay relays to control 75–76, 215–21
wiring 75
Bored wells 137
Bottled milk storage 88
Bottles and cans, sanitizing 51, 52
Bottling and packaging 82
Brucellosis 86
Bulk holding/cooling tanks, farm 26, 31
Bulk milk dispensers 88
Bulk milk hauler/sampler 97
qualifications 98
training 97
Bulk milk hauler/sampler, definition 1
Bulk milk pickup tanker
documentation requirements 8
drug residue screening 261
evaluation 97–108
inspection 9
inspection form 106
permit 6
permit reciprocity 101
permitting and inspection 100
standards 101
Bulk milk pickup tanker, definition 1
Bulk milk sampling 14–18, 97–108
Bulk milk storage tank, plant 50
Bulk milk storage, milk plant 50
Bulk milk storage, plant 81
Bulk milk tank truck driver
evaluation 97–108
Capping machines 82, 83
Caps and closures 54
storage 54
Cattle diseases 20, 23, 37, 59, 93–96
Ceilings
milk plant 41
milkhouse 24
milking barn or parlor 21
Certified
brucellosis free area 86
copies of ordinance ..... vii, 93
industry inspection 12
pasteurized milk 88
Single Service Containers or Closures manufacturers 241
State milk Sanitation Rating Officer 89
thermometers 98
Certified industry inspector
training 12
Certified laboratory 12

Charts
cleaning....51
flow rate recording....77
pasteurization....64, 68, 77
recording thermometer....37, 50, 64–70, 68, 77, 187
Chemical examinations, milk....9, 19, 20, 165
Chemical sanitizers....31–32, 50, 163, 243
Chemical standards, milk....19
Chemical toilets....108–26
Chlorine
hypochlorite....135
Clean clothng....85
Cleaning
facilities....24, 50, 97–108
flanks, udders and teats....33–34
mechanical....26, 30, 55, 123, 190
milk tank trucks....9
storage tanks....31–32, 50
utensils and equipment....31–32, 50, 97–108
Cleaning solution sensor....190
Cleanliness
clothing....37, 85
cowyard....23
equipment....31, 50
hands....36, 37, 85
milk plant....46
milk stools....22
milking barn....22
milking barn floors....22
milking barn gutters....22
milking barn walls and ceilings....22
milking parlor....22
personnel....37, 85
surcingles....22
surroundings....39, 85–86
toilet....28
toilets....44
vehicles....85, 97–108
Close-coupled valves....63
Clothing, clean....37
Code of Federal Regulations....7, 183, 255
Single Service reclaimed fiber....242
Cold Storage
lighting....42
Cold Storage Room....42
Coliform Counts
containers....52
milk and milk products....19
water supply....165
Computer
cleaning records....50
inspection records....14
logic diagrams....191–201
Computer controllers....193
Computer pasteurization control criteria....191
Computer terms defined....191

Concentrated milk products, definition....1
Concentrated milk, definition....1
Condensing water....45, 69, 141
Construction
cleaning solution lines....30, 34, 47
mechanically cleaned pipelines....30, 34, 47
milk pipelines....30, 34, 47
milking barn, stable or parlor....21, 97–108
milkroom....24
separation of products and solution lines....57
wash vats....26
water system....45, 126–56
Containers
aseptic, unsterile....15
bacterial counts....52
cleaning....31, 50
construction of multi-use....30, 50
delivery....88
efficiency of sanitization....50, 163
multi-use plastic....53
protected from contamination....34
protection from contamination....32, 54
sanitizing....31–32, 50, 163
single-service....30, 48, 54
single-service, bacterial counts....52
storage....32, 53
Convalescent pens....21
Convalescent Pens....117
Conveyer shields....82, 247
Coolers
refrigerants....37, 81
Cooling milk....37, 81
Cooling tanks
bulk farm....30, 97–108
Cooling temperatures
retail outlets....88
Cooling water....37, 81, 165
Cottage Cheese....3, 43, 45, 47, 82, 84, 255
Cottage Cheese, dry curd
packaging....82
Court action....5, 93
Cow water....70, 140
Cows
diseases....20, 86
flanks, udders and teats....33–34
health....20, 86, 93–96
housing....21
milking....24, 33–34
Cowyard....23
Cream
bacterial count....19
definiton....255
Cross connection
water supply....28, 45–46
Culinary steam....64–70, 74, 140, 141, 163, 176, 183, 184
Cultured products....19, 81, 255

Custom bottling and packaging, labeling 7
Dairy farm
  certified industry inspection 12
  construction and operation 21–27
  inspection form 257
  plans for future construction 90
  toilets 28
  water supply 126–56
Dairy farm, definition 1
Dairy plant
  plans for future construction 48
Date of effect of *Ordinance* 93
Definitions 1, 241, 255
Defoamers 58, 83
Delivery containers 88
Devices, flow diversion 64–70, 169–201
Dieases
  notification of 90
  personnel 90
Direct Microscopic Somatic Cell Count 17
Diseases
  cattle 86, 93–96
  notificaiton of 91
  notification of 86
  personnel 86, 91
Disinfection
  water supplies 135
Dispensers, bulk milk 88
Dispensing, milk and cream 88
Distant sources, Milk
  from distant sources 89
Distant sources, milk and milk products from 89
Distant sources, Recriprocity for milk and milk products 89
Distributor, milk, definition 2
Divert flow
  holding time testing 69
Divert line, restrictions 65
Doors
  feed storage 22
  milkhouse 21
  milkhouse, open outward 39
  milkroom 24
  screening 24
  single service manufatrurers 244
  toilet 28, 44
  truck unloading areas 56
  vehicle 35
  vestibule 24
Drainage
  cowyard 23
  leak protection valves 63
  milk plant floors 40
  milkhouse floor 26
  milking barn floor 21
  milking equipment 32
  plant milk and cleaning lines 47

Drilled well 126–56
Drip deflectors 35
Drug residue
acceptable test results 19
Appendix N monitoring 261–63
avoidance, control measures 35, 125
detection 167
individual producer, testing frequency 15
investigation 15
permit suspension 7
regulatory action 17
sampling 56
standards for Performance Based Farm Inspections 271–72
testing methods 17
violative producer penalties 262
Drug residues
penalties 6
Drugs, use, storage, labeling 35
Dry Curd Cottage Cheese, definition 255
Dry storage 85
single service articles 247
Dry Storage
lighting 42
Dug well 131, 136, 145
Electric screen panels 42
Emergency
farm milk pick-up 31
pasteurization equipment sealing 78
sale of pasteurized milk 8, 88
suspension of permit 11
Enforcement 93
examples of 3-out-of-5 compliance procedures 161
positive drug residues 262
Enforcement procedure 11, 12, 16
Enforcement rating 89
Engines, prohibited in milk house 124
Environmental Protection Agency 20, 40, 57, 86, 135, 142, 247
Equipment
cleaning 24, 31
construction and repair 30, 47
protection from contamination 34, 55
sanitizing 32, 50
storage 32, 53
tests 203–41
Equipment Test Form 80
Evaporators
condensing water for 140
Evaporators, condensing water for 70, 141
Examination
containers 52–53
cows 33–34, 86, 93–96
medical 90
milk and milk products 165
milk haulers/samplers 98
Fans 42, 247
Farm bulk tank thermometers 38

Farm pick -up, bulk milk....97–108
Farm storage tanks
recording thermometer....38
Farm transportation tanks....24
Federal Food, Drug and Cosmetic Act....1, 7, 53, 242, 255, 263
Feed storage....22
doors....22
Feed storage in milking barn....22
Feed troughs in milking barn....21
Filling and emptying time, pasteurization vats....62
Filters....43, 139, 178, 230
Flanks....33
Flavored milk
sampling....14
Flies....28, 39, 41, 44, 81, 85
Floor construction
milk house....24
milk plant....40
milking barn....21
Floors
milk plant, construction....40
milking barn....21
milking parlor, cleanliness....22
Flow alarm....212
Flow controls
automatic....64–76
Flow controls, automatic....169–201
Flow diversion device....64–70, 169–201
aseptic systems....78
requirements....169
requirements....64, 76
testing....203
testing....169
Flow promoting devices....178, 195–201, 203–41, 208
wiring....66, 71, 208
Flush toilet....28, 36, 44
Foam heating....58, 61, 184
Form
equipment test....80
Forms
bulk milk pickup tanker inspection....106
inspection....14, 257
ledger....14
milk sample collector....107
Freezing point depressants....82
Future dairy farms and milk plants....90
Gauges, pressure testing....75, 215
Glass pipelines....48
Goat
diseases....86
Goat milk
definition....2
labeling....7
somatic cell levels....17, 19
Grade A
labeling requirement....7

products, mandatory retail sale of....88
Grade A raw milk for pasteurization....18, 19, 20
Gutters, gravity flow....23, 114–17
Hand capping....84
Handling
abnormal milking equipment....20
discards and returns, separate room....43
single service containers....249
Hands
cleanliness....37, 85, 99
handwash signs....245, 246
washing facilities....36
Health of personnel....90
Hearings....6
Hermetically sealed containers....16, 70, 81, 83, 255
HHST
controls....66
holding time....65, 67, 230
tests....80
Higher heat, short time pasteurization (HHST)....65
High-termperature, short time pasteurization (HTST)....64
Holding time
batch pasteurization....61
Holding tube....65
requirements....66, 72
seals....66
Homogenizer timing pump....68
Hose port, milkhouse....26
Hot water
handwashing facilities....36
milkhouse....24
sanitization....32, 163
HTST
computer controls....192
holding time....223
mag flow meter based timing systems....173
reactivated phosphatase....166
system operation....169
tests....80, 203–41
Identity labeling....7
Impounding milk and milk products....5
Indicating thermom XE "Pipelines:indicating thermometer" eter
aseptic system....71
Indicating thermometer
airspace....60, 62, 77, 186, 204
batch pasteurization....60
digital....186
HTST pipeline....64, 67, 185
refrigerated room....81, 190
specifications....185
storage tank....189
stroage tank....81
testing....204
vat....185
Industry
aseptic processing records....10

certified farm inspection....12
laboratory....12
records for aseptically packaged products....16
records, drug residue testing....261
records, vitamin use....266
Industry laboratory....4
Infection, procedure when suspected....91
Ingredients
protection from contamination....55
storage and handling....56
Inlet valves....213
Insect control....39, 125
Insecticides....20, 39, 40, 57, 86, 247
Inspection
beyond the limits of routine....89
Inspection Reports....14
Interstate shipment of milk and milk products....89
Iodine componds....142
Labeling
animal drugs....35
emergency supplies....5, 8, 88
identity....7
misleading....9
premium....9
requirements....7, 8
shipping statement....8
Laboratory
industry....12
official, definition....3
sample, chain of custody....105
techniques and tests....16
vitamin analysis....16, 267
water analysis....29
Laboratory, officially designated....4
Leak escape port....65
Leak escape ports....208
Leak protect valve....213
Leak protect valves....63
Lighting
cold storage....42
dry storage....42
production areas....42
utensil cleaning....42
Lubricants....83, 249
Magnetic flow alarm....77, 174, 212
Magnetic flow meter based timing system....173, 178, 226
Manual of Individual Water Supply Systems....135, 142
Manure disposal....21, 23, 39, 114
Mastitis control....20, 95, 124
Mastitis Council, National....95, 124
Medical examination....91
Medical Milk Commissions, American Association of....88
Metering pump
pasteurizer....68, 71, 208, 209
vitamin....265
Milk

abnormal....1
adulterated....1, 5, 20, 167, 255
bacterial counts....15, 16, 19
cans....7, 31, 89
certified pasteurized....88
standards....19
concentrated....82
concentrated milk products, definition....1
concentrated, definition....1
condensed....2, 3
contamination....26
cooling....37, 81, 102
cultured....2, 255
definitions from the Code of Federal Regulations....1
dipping or ladling....88
dispensers....88
dispensing....88
drug residue detection....261
emergency sale of....5, 8, 88
examination of....9, 14–18, 20, 261
flavored....14
goat, definition....2
grade A for pasteurization....18
grade A pasteurized....18, 40
lowfat....3
lowfat, (see 21 CFR 130.10)....255
lowfat, sampling requirement....14
misbranded....5, 255
products defined by 21 CFR 130.10....3
protected from contamination....10, 32, 34, 50, 55
protected from other products....58
rating....89, 90
reconstituted or recombined....4, 7, 58
reduced fat (see 21 CFR 130.10)....3, 255
spilled, overflowed or leaked....35, 58
standards of identity....255
straining....30
transfer station requirements....40
transfer station, definition....5
transferring....26, 34, 35, 102
transportation....34
ungraded, sale of....5, 8, 88
vitamins in....16, 168, 265
Milk distributor, definition....2
Milk flow controls....64, 169, 221
Milk hauler training....97
Milk Hauler, definition....1
Milk Hauler/Sampler, inspection requirement....9
Milk Producer, definition....2
Milk products, definition....2
Milk sample collector evaluation form....107
Milk sanitaiton ratings....89
Milk storage tanks, cleaning frequency....50
Milk tank truck cleaning facility, definition....3
Milk tank truck cleaning facility, inspection requirement....9
Milk tank truck driver,definition....3, 97

Milk tank truck inspection requirement 9
Milk transfer station 40
Milk transport tank, definition 3
Milk transportation tank, used for cooling/storage on farm 24
Milkers hands 35
Milking stools 22
National Mastitis Council 95, 124
Notification of Disease 90
Nutrient Content Claim 3, 255
Nutrition 7
Official laboratory,definition 3
Officially designated laboratory, definition 4
Optional ingredients 3
Outlet valve 60, 62
Outlet valve, vat pasteurizer 64
Overcrowding, dairy barn 22, 34
Overcrowding,, milk plant 55
Overflow milk and milk products 35
Overflow, condensing water 45
Overflow, milk and milk products 55
Overflow, milk tank truck 25
Overflow, pasteurizer constant level tank 58, 74
Overflow, toilet 109
Overhead feed storage 22
Overhead piping 58, 248
Packaging machines 82
Packaging rooms 43
Packaging, aseptic 15
Packaging, aseptic processing 50
Packaging, single service articles 30
Partitioning
  milking barn 22
  receiving stations 40
Pasteurization
  definition 4, 59
  equipment tests 80, 203–41
  higher-heat, shorter time (HHST) 70–74
  high-temperature, short time (HTST) 64–70
  recording records 77
  steam injection 69
  systems with regenerators 74
  vat 61
Penalties 93
  drug residue 262
  immenent health hazard 11
  monetary 6
Performance-Based Dairy Farm Inspection System 271–72
Permits
  hearings 5
  issuance of 5
  milk distributor 5
  milk plant oporater 5
  milk producer 5
  milk tank truck 5, 100
  milk transportation company 5, 100
  reinstatement of 5, 262

requirements for....5
revocation of....5, 262
suspension of....5, 262
Personnel
cleanliness....85
Personnel health....90
Personnel, cleanliness....37
Pesticides....20, 39, 56, 86, 126, 166, 247
Phosphatase reactivation....166
Phosphatase tests....15, 17, 19, 61, 161, 165
Pipelines
capacities, table of....124
indicating thermometer....60, 61, 64, 67, 71, 77, 185, 204
mechanically cleaned....30, 34, 47
welded....30, 47
Piping
sanitary....30, 31, 47
water into milkhouse....24
water, separation between milk lines....57
Pits, water supply....132
Plans
dairy farm construction and re-construction....90
milkhouse....27
milking barn....118
pipeline systems....31, 48
sewage disposal....114
Plastic containers
multi-use....30, 48, 49, 53
Plastic materials....242
Posting inspection report....12
Pressure differential controller....75, 195, 217, 239
Pressure gauges....75, 216, 238
Pressure sensors....76
Pressure testing gauges....75
Pressure, relative, in regenerator....74, 169–201
Private water supplies....165
Privies on dairy farms....28, 110
Processing other products....58
Producer, milk, definition....2
Product contact surfaces....27, 53, 66
Programmable controller....192
Protected form contamination....25
Protected from contamination....10, 32, 34, 50, 53, 83, 85, 247
Public health hazard....5, 12, 44
Public health value of pasteurization....59
Pump and well diagrams....143–56
Pumps
booster pump wiring....220
centrifugal....173
maximum booster pump pressure....217
milk....33, 64, 66, 68, 71, 75, 102, 169, 171, 173, 175, 178, 196, 208, 215, 217, 220
milk overflow protection....27
milk pump placement....178
milk, computer controlled....196
milk, pressure switches....215
milk, time delays....175

pressure switches 171
regenerator bypass 169
water....29, 131
Raw milk, Grade A, for pasteurization....18, 19, 20
Receiving and dump vats 56
Receiving station
definition 4
inspection frequency requirement 9
permit required 6
sanitation requirements 40, 56
Recirculated water and refrigerants 38, 82, 165
Reclaimed water 140
Reconstituted milk or milk products 2, 4, 7, 58
Reconstituted or recombined milk and milk products 3
Recorder/controllers 64, 68, 71, 75, 169, 188, 193, 205, 215
Recording thermometer....38, 60, 187, 189, 205, 206, 207
aseptic system....71
aseptic system, chart reviewed by management 78
batch pasteurizer....60, 187
chart requirements 77
farm cooling 38
farm storage tanks 38
HTST pipeline 64, 67
mechaincal cleaning system....190
quarterly regulatory initials 77
storage tank....189
testing 205
Recording thermometer charts 37, 38, 64, 77
Records
aseptic processing 10, 77
batch pasteurization 60, 77
certified inspector 13
cleaning, electronic storage....51
equipment cleaning/sanitizing 50
farm bulk tank....38
farm inspection....14
flow rate recorder....78
hearing 6
HTST 64
pasteurization 77
producer....12
water testing....30, 46
Records, access to industry 60
Recycled plastic materials 242
Regenerator pressure differential controler gauges 75
Regenerators
milk-to-milk 74, 170
milk-to-water-to-milk....76
Regulatory agency, definition 4
Reinstatement of permits 5, 12, 262
Relative pressures in regenerator....67, 71, 74, 169–201, 215, 217
Relays, time delay 65, 75, 174, 210, 211, 212, 229
Report forms 106, 251, 257
Requirements for Foods Named by Use of a Nutrient Content Claim....3, 255
Returned product areas 43
Returned products, repasteurized....55

Revocation of permit 262
Rodent control 39, 57, 86, 125, 126, 247
Rodenticides 39, 40, 57, 86, 247
Rubber and rubber-like material 30, 31, 48
Safe levels, drug residues 263
Sale of grade a pasteurized milk and milk products 88
Sale of adulterated milk and milk products 1, 5
Sale of ungraded milk and milk products 5, 8, 88
Sampler, definition 1
Samples
  drug residues 56, 261
  milk for pesticides 167
  multi-use containers 52
  single service containers 53, 244
  universal sampling system 99
  vitamin 16, 168
Samples, milk and milk products 9
  application and frequency 7, 14–18
Samples, water
  application and frequency 29, 45–46, 246
  examination 45–46
  recirculated or reclaimed water 140
Sampling 97–108
  accelerated 7
Sanitary piping 30, 31, 47
Sanitation requirements
  grade A pasteurized milk and milk products 12, 40–86
  grade A raw milk for pasteurization 12, 18–40
Sanitization
  plant containers and equipment 50
  utensils and equipment 31–32
Sanitizers
  single-service 243
  storage 35, 55
  test kit 98
Sanitizers, test for strenght of 52
Sanitizing
  assembled equipment 50, 52
  chemical 163
  containers, utensils and equipment 50
  efficiency of 52
  extended runs between 50
  general requirements 163
  hot water 163
  measuring the strength of solutions 40–86
  record storage and availability 50
  steam 51, 163
  transport tanks 50, 97–108, 52
  udders and teats 34, 142
Screening
  milk plant 41
  milkhouse 24, 39
Screening tests for milk 17, 95
Seal
  bulk milk pickup tanker 8, 104
  bulk milk pickup tankers 104

Seals
buried well 30
computer controls 191
differential pressure controller 75
dispensing devices 89
emergency pasteurization equipment, by industry 78
flow controls, time delays 174
flow promoting devices, controllers 175
indicating thermometers 186
loss of signal 174
milk tank truck 25
milk transport tanks 8
organic contaminant detector, multi-use bottles 53
pasteurization controls, flow promoters, during testing 203–41
temperature recorder/controller 71
thermal limit controller 66
well 131
Sensor
cleaning solution temperature 190
pressure 76
temperature 65, 66, 67, 70, 190
Separate rooms
milk plant 42–44
single service fabricating 245
Sewage disposal 120
Sewage disposal facilities 28, 44, 245
Sewers, distance from water supply 128
Shields
conveyer 83, 247
open-surface coolers 81
packaging machines 83
Shipping statement 8, 104
Short-time high temperature pasteurization 64–70, 77, 223
Sight glass,pasteurizer leak detect line 65
Silo tanks 50
Single Service Containers
bacterial counts 52
sampling requirements 52
Single Service Plant report form 251
Single-service articles 30, 52
Solids-not-fat 1, 2
Solution lines, mechanical cleaning 30, 47, 190
Springs, disinfection of 138
Springs, water supply 133
Stainless steel 30, 47, 49, 64
Standard Methods for the Examination of Dairy Products 15, 16, 17, 19, 97, 98, 165, 244
Standard Methods for the Examination of Water and Wastewater 136, 141
Standardization of milk and milk products 56
Standards
3-A sanitary 31, 50, 102
bulk milk pick-up tanker 101
chemical and bacteriological tests for water and milk 165
culinary steam quality 183
milk and milk products 18
of identity 255
OSHA 101

performance-based dairy farm inspection system 271
single service articles, bacteriological 243
table of chemical, bacteriological and temperature standards 19
water 38, 45, 82, 126–56
water supply 29
Standards for the Examination of Dairy Products 100
Steam
controls for injection pasteurizers 176
culinary 56, 70, 76, 140, 141, 163, 255
direct injection, differential pressure 67, 73
infusion, holding time 233
injection 69
non-condensable gasses 69
quality standards 56, 183
sanitizing 51
sanitizing with 163
volume control 67
Stools, milk 22
Storage
aseptically processed milk 16
bulk milk storage tanks 43
drugs and chemcials 35
dry products 41
feed 22
in milk transportation tank on farm 24
labeling milk containers in 7
milk in final container 88
milk tanks, cleaning 50
multi-use containers, utensils and equipment 25, 30, 32, 53
on farm, partial pick-up 32
returned products 43
sanitizers 55
single service articles 54
single service closures 84
temperatures 81
toxic materials 55, 56
Storage tank
farm 29, 31, 38
milk plant 43, 81
Storage tank thermometers 38, 50
Strainers 31, 33, 35, 49, 56
Straining milk in barn 34
Submerged inlets, water supply 29, 142
Surcingles 22
Surface coolers 81
Surface water supplies 130, 134
Surroundings
dairy farm 39
milk plant 85–86
single service plant 250
Sweeteners 4, 60, 77
Switches, automatic, manual 66, 71, 192, 193
Tamper proof closure 83
Tanks
bulk holding/coolingtanks, farm 30
bulk storage, milk plants 43, 48–50

farm, cleaning 31–32
storage and transportation, protection 8
Storage and transportation, protection during 25
transportation 30
Teats, cleaning and sanitizing 33–34
Temperature
aseptic milk storage 12
charts 37, 38, 51, 64, 68, 77
cooling 37
delivery/retail 89
heat treated milk or cream 18
milk during separation 18
milk storage requirements 81
pasteurization 4, 10
raw milk for pasteurization 37, 38
recording device 24, 38, 50
sample 98
sensors 65, 66, 67, 70, 190
standards 19
Tests
airspace thermometer 62, 77, 80, 204
aseptic processing equipment 77
aseptically packaged milk and milk products 15
booster pump 80, 210, 215, 218, 220
coliform 16
control logic 80
control switches, regenerator pressure 80, 215
cut-in, cut-out temperatures 66, 77, 80, 215, 221
drug residue 15, 17, 167, 168
equipment 66, 78, 80, 260
flow diversion device opertion 203–41
flow-diversion device operation 80
frequency, individual producer, raw milk 15
frequency, pasteurized milk products 14
HHST holding time, calculated from pumping rate 67
holding time 80
holding time, divert flow 69
holding time, HTST 69
HTST recorder/controller 80
indicating thermometers 80
laboratory techniques 16
leak protector valves 80
mastitis screening 17
pasteurization holding time 72
pesticide residues 15, 20
phosphatase 15, 17
pressure gauges 80
recirculated cooling water 38
recorder/controller 80
recording thermometers 80
recording thermometers, check against indicating 80
regulatory access to 10
sanitizer strength 52
single service articles, bacteriological 53
vacuum systems, HHST 80
vitamins 16, 17

water supplies, frequency 30
Thermal limit controller....66, 68, 71, 75, 205, 223, 235
Thermometer
airspace 60, 62, 77, 186, 204
aseptic system 71
batch pasteurization 60
batch pasteurizer, recorder 187
daily comparison of indicaitng and recording 66
digital 186
farm bulk milk tanks 38
farm tank compared with hauler/sampler 99
hauler/sampler, calibrated 98
HTST pipeline 64, 67
recording, mechanical cleaning system 190
recording, storage tank 189
refrigerated room 81, 190
specifications 185
storage tank 81
storage tank, indicating 189
test, specifications 203
Thermometric response test 186, 214
Time delay relays 65, 75, 174, 195, 210, 211, 212, 229
Tobacco products,use prohibited 85
Toilet
chemical 113
dairy farm 36
doors 44
milk plant 44
single service manufacturers 245
Toxic materials 21, 30, 47, 49, 55, 82, 166, 178, 249
Transfer stateion, definition 5
Transfer station, sanitation requirements 40, 56
Transferring milk 14, 88
Transportation tanks
cleaning and sanitizing 25
construction requirements 30
cooling of milk in 81
cooling of milk on farm in 24
suitable shelter 26
unloading 56, 86
Trash storage 86, 124
Tube, holding 66, 72
Tuberculosis 34, 86, 87, 95
Udder 20, 23, 33–34
Unconstitutionality clause 93
Ungraded milk and milk products 5, 8, 88
United States Department of Agriculture 86, 95
Universal samples 99
Utensils
cleaning 31, 50
construction 30, 48–50
handling after sanitizing 34, 53
handling after sanitzing 55
protected from contamination 55
sanitizing 20, 31–32, 50
storage 53

Vacuum breaker 68
Vacuum condenser water feed line controls 70
Vacuum equipment 45, 69, 74
Vacuum hoses, milking machine 33
Vacuum, flow promoting device 64
Vacuum, steam volume control 67
Vacuum, water used to produce 45
Validity of Ordinance 93
Valve design 48
Valve design and installation 63
Valve, block and bleed 57
Valve, close-coupled 62
Valve, inlet and outlet 60
Valve, inspection 48
Valve, protection 56
Valves, divert 65
Valves, inlet and outlet 62
Valves, protected from contamination 35
Vat pasteurizer outlet valve 64
Vats
  covers 49
  farm wash 24, 26, 37
  pasteurizing 61
  plant equipment wash ..... *See*
  plant utensil wash 51
Vehicles
  doors 85
Ventilation
  dairy barn 21, 122
  milk plant 42
  milkhouse 24, 122
  pressurized 42
  toilet rooms 28, 44, 109–14
Vermin control 39, 123
Vestibule, milkhouse 26
Violations, procedures when noted 5, 9, 11, 93, 101
Vitamin
  addition to milk 265–69
  analysis 168
  analysis requirement 16
  test methods 17
  use records 266
Walls
  barn, stable or parlor 21, 122
  milk plant 41
  milkhouse or milkroom 24, 122
Wandering shed 22
Wash and rinse vats 24, 26
Waste disposal 23, 26, 28, 44, 47, 86, 108–26, 246
Water
  boiler feed 183
  examination of 46
  laboratory samples 29
  reclaimed 140
Water supplies
  bacteriological tests, (MPN) and Millipore filter 165

chemical treatment, equipment for 138
coliform standards 165
condenser 45, 74, 140
construction 28, 45–46, 127
disinfection 135
disinfection of source 135
distance from sources of contamination 128
examination of 30
farm 28
location 127
milk plant 45–46
plant 45–46
sampling frequency 30
sanitary survey 129
springs 133
standards 29, 127
surface water 134
Welded pipelines 48
Well and pump diagrams 143–56
Wells
bored 45–46, 143
buried well casing seal 29
casings and linings 129
covers and seals 131
disinfection 135
drilled 45–46
dug 131
manholes 133, 158
pits and drainage 132
Windows
milk plant 41
milkhouse 27