Grade "A" Condensed and Dry Milk Ordinance

1995 Revision

Grade A Condensed and Dry Milk Products and Condensed and Dry Whey--Supplement I to the Grade A Pasteurized Milk Ordinance, 1995 Recommendations

U.S. Department of Health and Human Services
Public Health Service
Food and Drug Administration

PREFACE

The administrative and technical requirements in this *Ordinance* for the manufacture of condensed and dry milk products and condensed and dry whey intended for use in the commercial preparation of Grade A pasteurized milk products, have been developed as a supplement to the *Grade A Pasteurized Milk Ordinance--1995 Recommendations of the United States Public Health Service/Food and Drug Administration*. Like the parent document, this *Ordinance* has not been produced by the Public Health Service/Food and Drug Administration alone. It has been developed with the assistance of the National Conference on Interstate Milk Shipments which includes milk regulatory agencies at every level of Federal, State, and local government; including both health and agriculture departments, and all segments of the dairy industry.

Modern milk condensing and drying techniques have made possible the manufacture of high quality condensed and dry milk products and condensed and dry whey suitable for use in the commercial preparation of pasteurized milk and milk products as defined in the *Grade A Pasteurized Milk Ordinance--1995 Recommendations of the United States Public Health Service/Food and Drug Administration.* The National Conference on Interstate Milk Shipments, recognizing the need for such condensed and dry milk products and dry whey to be of a sanitary quality comparable to that of Grade A market milk, requested the Public Health Service/Food and Drug Administration to update its sanitary standards for the manufacture of Grade A condensed milk products, dry milk products and dry whey.

The format and general requirements of the *Grade A Pasteurized Milk Ordinance* have been followed closely. Deviations in content, for the most part, relate to practices which are specific to the condensing and drying process. Grades other than Grade A are not specified since these standards are intended to cover the production of condensed milk products, dry milk products and dry whey that are acceptable to State and local regulatory agencies for use in the processing of Grade A pasteurized milk products.

This publication, like the *1995 Grade A Pasteurized Milk Ordinance*, provides a model *Ordinance* and detailed technical information to assist in the interpretation and application of its provisions. Part I is the unabridged form of the *Ordinance*. It contains, in full, the provisions governing the processing, packaging, and sale of Grade A condensed and dry milk and condensed and dry whey intended for use in the commercial preparation of Grade A pasteurized milk products. Part I is suggested for enactment in jurisdictions where adoption by reference is not considered legal. Part II contains the *Ordinance*, the public health reason and administrative procedures for each requirement. Administrative procedures are designed to unify the interpretations of the *Ordinance*, particularly in the case of the sanitation requirements. It also provides details as to methods to obtain satisfactory compliance. Section 12 specifies that the *Ordinance* shall be enforced in accordance with the Administrative Procedures in Part II.

Appendix I contains the adoption-by-reference form of the *Grade A Condensed and Dry Milk Products and Condensed and Dry Whey--Supplement I to the Grade A Pasteurized Milk Ordinance, 1995 Recommendations* (unabridged form). The short form reduces the cost of publication and printing, and helps to keep the *Ordinance* up-to-date and readily amendable. It is suggested for adoption in those jurisdictions where adoption of ordinances by reference to published standards is considered legal. The appendixes contain detailed explanatory material on various aspects of sanitation and administration for the processing, packaging, storage, and transportation of Grade A condensed and dry milk products and condensed and dry whey.

Acknowledgments. The development, preparation and publication of the *Grade A Condensed and Dry Milk Products and Condensed and Dry Whey Ordinance* is the responsibility of the Milk Safety Branch (HFS-626), Division of Cooperative Programs, Center for Food Safety and Applied Nutrition, Food and Drug Administration, in cooperation with the National Conference on Interstate Milk Shipments. This publication is developed in accordance with the principles of the memorandum of understanding for the cooperative Federal/State Program. The dedicated efforts of the agency's staff and conference members, along with representatives of academia and the milk industry, have made the publication of the *Grade A Condensed and Dry Milk Products and Condensed and Dry Whey Ordinance* possible. Particular credit is due to the following for their substantial contributions: Robert N. Childers, Allen R. Sayler, Steven T. Sims, and Joseph M. Smucker. Acknowledgment should also be made to Mr. Roger J. Pamment, Dairy Division, Michigan Department of Agriculture for the long, tedious hours he invested in the production of this document. He was instrumental in its production. Special thanks are also due Richard Eubanks, Robert Hennes, Ray Niles, Terry Musson, Robert Gales, Lee Jensen, Dr. Warren Clark and Lee Blakley who all assisted in the preparation of this document.

CONTENTS

Part I. *Grade A Condensed and Dry Milk Products and Condensed and Dry Whey--Supplement I to the Grade A Pasteurized Milk Ordinance, 1995 Recommendations* (unabridged form) 1
Part II. *Grade A Condensed and Dry Milk Products and Condensed and Dry Whey--Supplement I to the Grade A Pasteurized Milk Ordinance, 1995 Recommendations* with administrative procedures 24
Section 1. Definitions 25
Section 2. Adulterated or Misbranded Milk and Milk Products 30
Section 3. Permits 31
Section 4. Labeling 33
Section 5. Inspection of Condensing and/or Drying Plants 35
Section 6. The Examination of Condensed and Dry Milk Products and Condensed and Dry Whey 37
Section 7. Standards for Milk, Milk Products and Condensed and Dry Milk Products 40
Chemical, Physical, Bacteriological and Temperature Standards 42
Sanitation Requirements for Grade A Condensed Milk and Dry Milk Products and Condensed and Dry Whey 44
lp. Floors--Construction 44
2p. Walls and Ceilings--Construction 45
3p. Doors and Windows 45
4p. Lighting and Ventilation 46
5p. Separate Rooms 46
6p. Toilet-Sewage Disposal Facilities 47
7p. Water Supply 48
8p. Hand-Washing Facilities 49
9p. Plant Cleanliness 49
10p. Sanitary Piping 50
11p. Construction and Repair of Containers and Equipment 52
12p. Cleaning and Sanitizing of Containers and Equipment 54
13p. Storage of Cleaned Containers and Equipment 56
14p. Storage of Single-Service Containers, Utensils and Materials 57
15p. Protection from Contamination 57
16p. Pasteurization 60
16p. (A) High-Temperature, Short-Time (HTST) Continuous Flow Pasteurization . . 61
16p. (B) Pasteurizers Employing Product-to-Product Regenerative Heating 68
16p. (C) Temperature Recording Charts, Equipment Tests and Examinations 70
17p. Cooling of Milk, Milk Products, Whey and Condensed Milk Products, and Condensed Whey 73
18p. Packaging and Container Filling 74

19p. Container Closure, Sealing, and Storage 75
20p. Personnel--Cleanliness 75
21p. Vehicles 76
22p. Surroundings 77
Section 8. Condensed and Dry Milk Products and Condensed and Dry Whey from Points beyond Limits of Routine Inspection 78
Section 9. Future Condensing Plants and Drying Plants 78
Section 10. Personnel Health 79
Section 11. Procedure When Infection or High Risk of Infection is Discovered 80
Section 12. Enforcement 82
Section 13. Penalties 82
Section 14. Repeal and Date of Effect 82
Section 15. Separability Clause 82
Appendixes 84
A. Standards for Water Sources 85
B. Sanitization 87
I.--Methods of Sanitization 87
II.--Sanitization of Assembled Equipment 90
III.--Sanitizer Strength and Water Hardness Tests 91
C. Air for Drying Equipment and Air Under Pressure--Product Contact Surfaces 93
D. Culinary Steam--Milk, Milk Products and Whey 102
E. Thermometer Specifications 107
F. Pasteurization Equipment and Controls--Tests 111
I.--Testing Apparatus Specifications 111
II.--Test Procedures 112
G. Standards of Identity for Milk, Milk Products, Nonfat Dry Milk, and Federal Food, Drug, and Cosmetic Act Defined 143
H. Evaporating, Drying and Dry Product Equipment Cleaning 167
I.--Cleaning of Evaporators and Condensers 167
II.--High Pressure Pumps and High Pressure Lines 169
III.--Wet Cleaning of Dryers 169
IV.--Dry Cleaning 170
V.--Auxiliary Dry Product Equipment 172
I. Adoption-by-Reference Form of the *Grade A Condensed and Dry Milk Products and Condensed and Dry Whey--Supplement I to the Grade A Pasteurized Milk Ordinance, 1995 Recommendations* 175
J. Reports and Records 177
K. Chemical and Bacteriological Tests 181
L. Pasteurization and Equipment Procedures 191
M. Reserved 195
N. Drug Residue Monitoring and Farm Surveillance 197
Index 201

ILLUSTRATIONS

Page

Fig. 1. Individual Compression Type Air Supply 97
2. Central Compression Air Supply 97
3. Individual Blower Type Air Supply 100
4. Individual Fan Type air Supply 101
5. Culinary Steam Piping Assembly for Steam Infusion or Injection 105
6. Pressure Switch Settings 140
7. Milk-to-Milk Regeneration--Homogenizer Upstream from Holder 192
8. Milk-to-Milk Regeneration--Surface Cooler 193
9. Milk-to-Milk Regeneration--Booster Pump 194
10. Milk-to-Milk Regeneration--Homogenizer and Vacuum Chambers Downstream from Flow Diversion Valve 195
11. Controls for Steam Injection Pasteurizers 196
12. HTST System with a Magnetic Flow Meter Using a Constant Speed Centrifugal Pump and Control Valve 197
13. HTST System with a Magnetic Flow Meter Using an A-C Variable Speed Centrifugal Pump 199

TABLES

Page

Table 1. Chemical, Physical, Bacteriological and Temperature Standards 14,42
2. Removal of Restrictions When Infection or High Risk of Infection is Discovered 22,81
3. Equipment Tests--Batch, HTST, HHST and AP Systems 72
4. Holding Tube Length, HHST Pasteurizers Indirect Heating 135
5. Centerline Distances of 3-A Fittings 135
6. Holding Tube Length, HHST Pasteurizers, Direct Heating 137
7. Sieve Sizes and Designations 172

PART I

Grade A Condensed and Dry Milk Products and Condensed and Dry Whey--Supplement I to the Grade A Pasteurized Milk Ordinance, 1995 Recommendations

An ordinance defining "condensed milk", "dry milk products", "condensed whey", "dry whey", "pasteurization", etc.; prohibiting the sale of adulterated or misbranded condensed milk and dry milk products and condensed and dry whey; regulating the production, manufacture, packaging, labeling, storage, transportation, handling, and sale of condensed and dry milk products and condensed and dry whey, for use in the commercial preparation of Grade A pasteurized milk products; this ordinance to supplement (cite ordinance adopting the *Grade A Pasteurized Milk Ordinance--1995 Recommendations of the United States Public Health Service/Food and Drug Administration)* and to be enforced in conjunction with and in addition thereto.

Be it ordained by the...of ...[a.1] as follows:

[a.] Numbered footnotes are assembled on P. 23

SECTION 1. DEFINITIONS

The following definitions shall apply in the interpretation and the enforcement of this *Ordinance*:

A. MILK.--Milk is the product defined in the *Code of Federal Regulations*, Title 21, Section 131.110.

A-1. Dry Whole Milk.--Dry whole milk is the product defined in the *Code of Federal Regulations*, Title 21, Section 131.147.

A-2. Goat Milk.--Goat milk is the normal lacteal secretion, practically free of colostrum, obtained by the complete milking of one or more healthy goats. The word "milk" shall be interpreted to include goat milk.

A-3. Sheep Milk.--Sheep milk is the normal lacteal secretion, practically free of colostrum, obtained by the complete milking of one or more healthy sheep. The word "milk" shall be interpreted to include sheep milk.

B. CREAM--Cream is the product defined in the *Code of Federal Regulations*, Title 21, Section 131.3(a).

B-1. Dry Cream.--Dry cream is the product defined in the *Code of Federal Regulations*, Title 21, Section 131.149.

C. SKIM MILK.--Skim milk is the product defined in the *Code of Federal Regulations*, Title 21, Section 131.143.

D. CONDENSED MILK.--Condensed milk is an alternate name for concentrated milk. This definition is not intended to include such products as sterilized milk and milk products hermetically sealed in a container and processed, either before or after sealing so as to prevent microbial spoilage, or evaporated milk, or sweetened condensed milk, except when they are combined with other substances in the commercial preparation of any pasteurized milk or milk product defined in the *Grade A Pasteurized Milk Ordinance--1995 Recommendations of the United States Public Health Service/Food and Drug Administration*.

D-1. Grade A Concentrated (Condensed) Skim Milk.--Grade A concentrated/condensed skim milk means concentrated/condensed skim milk which complies with the applicable provisions of this *Ordinance.*

E. CONCENTRATED MILK.--Concentrated milk is the product defined in the *Code of Federal Regulations*, Title 21, Section 131.115.

E-1. Concentrated Milk Products.--Concentrated milk products shall be taken to mean and to include homogenized concentrated milk, concentrated skim milk, concentrated lowfat milk, and concentrated milk or concentrated skim milk, and which, when combined with potable water in accordance with instructions printed n the container, conform with the definitions of the corresponding milk products in this section.

F. LOWFAT MILK.--Lowfat milk is the product defined in the *Code of Federal Regulations*, Title 21, Section 131.135.

F-1. Lowfat Dry Milk.--Lowfat dry milk is the product defined in the *Code of Federal Regulations*, Title 21, Section 131.123.

G. NONFAT DRY MILK.--Nonfat dry milk is the product as defined in the *Code of Federal Regulations*, Title 21, Section 131.125.

G-1. Nonfat Dry Milk Fortified with Vitamins A and D.--Nonfat dry milk fortified with vitamins A&D is the product defined in the *Code of Federal Regulations*, Title 21, Section 131.127.

H. BUTTERMILK.--Buttermilk is a fluid product resulting from the manufacture of butter from milk or cream. It contains not less than 8 1/4 percent of milk solids not fat.

H-1. Dry Buttermilk.--Dry buttermilk is the product defined in the *Code of Federal Regulations*, Title 7, Section 58.2651(a).

H-2. Grade A Dry Buttermilk.--Grade A dry buttermilk means dry buttermilk which complies with the applicable provisions of this ordinance.

H-3. Dry Buttermilk Product.--Dry buttermilk product is the product defined in the *Code of Federal Regulations*, Title 7, Section 58.2651(b).

H-4. Grade A Dry Buttermilk Product--Grade A Dry buttermilk product means dry buttermilk product which complies with the applicable provisions of this ordinance.

H-5. Condensed Buttermilk.--Condensed buttermilk is the product resulting from the removal of a considerable portion of water from buttermilk.

H-6. Grade A Condensed and Dry Buttermilk.--Grade A condensed and dry buttermilk means condensed or dry whey which complies with the applicable provisions of this *Ordinance*. The words "condensed and dry milk products" shall be interpreted to included condensed and dry buttermilk.

I. MILK PRODUCTS.--Milk products include cream, light cream, light whipping cream, heavy cream, heavy whipping cream, whipped cream, whipped light cream, sour cream, acidified sour cream, cultured sour cream, half-and-half, sour half-and-half, acidified sour half-and-half, cultured sour half-and-half, reconstituted or recombined milk and milk products, concentrated milk, concentrated milk products, skim milk, lowfat milk, frozen milk concentrate, eggnog, buttermilk, buttermilk products, whey and whey products, cultured milk, cultured lowfat milk, cultured skim milk, yogurt, lowfat yogurt, nonfat yogurt, acidified milk, acidified lowfat milk, acidified skim milk, low-sodium milk, low-sodium lowfat milk, low-sodium skim milk, lactose-reduced milk, lactose-reduced lowfat milk, lactose-reduced skim milk, aseptically processed and packaged milk and milk products as defined in this section, milk, lowfat milk or skim milk with added safe and suitable microbial organisms and any other milk product made by the addition or subtraction of milkfat or addition of safe and suitable optional ingredients for protein, vitamin or mineral fortification of milk products defined herein. Milk products also include those dairy foods made by modifying the federally standardized products listed in this Section in accordance with 21 CFR 130.10 - Requirements for foods named by use of a nutrient content claim and a standardized term.[3]

This definition is not intended to include milk products such as evaporated milk, evaporated skim milk, condensed milk (sweetened or unsweetened), dietary products (except as defined herein), infant formula, ice cream and other desserts, dry milk products (except as defined herein), canned eggnog in a rigid metal container, butter or cheese except when they are combined with other substances to produce any pasteurized or aseptically processed milk or milk product defined herein.

I-1. Pasteurized Milk Products.--Pasteurized milk products mean commercially prepared Grade A pasteurized milk products regulated by (cite ordinance adopting *Grade A Pasteurized Milk Ordinance--1995 Recommendations of the United Public Health Service/Food and Drug Administration*).

I-2. Dry Milk Products.--Dry milk products mean products resulting from the drying of milk or milk products and any product resulting from the combination of dry milk products with other wholesome dry ingredients.

I-3. Grade A Dry Milk Products.--Grade A dry milk products mean dry milk products which comply with the applicable provisions of this *Ordinance.*

J. WHEY.--Whey is the product defined in the *Code of Federal Regulations,* Title 21, Section 184.1979. (Note: Also see Title 07, Section 58.2601).

J-1. Reduced Lactose Whey.--Reduced lactose whey is the product defined in the *Code of Federal Regulations,* Title 21, Section 184.1979a.

J-2. Reduced Minerals Whey.--Reduced minerals whey is the product defined in the *Code of Federal Regulations*, Title 21, Section 184.1979b.

J-3. Whey Protein Concentrate.--Whey protein concentrate is the product defined in the *Code of Federal Regulations*, Title 21, Section 184.1979c.

J-4. Whey Products.--Whey products mean any fluid product removed from whey; or made by the removal of any constituent from whey; or by the addition of any wholesome substance to whey or parts thereof.

J-5. Dry Whey.--Dry whey is the product defined in the *Code of Federal Regulations*, Title 21, Section 184.1979.

J-6. Dry Whey Products.--Dry whey products mean products resulting from the drying of whey or whey products and any product resulting from the combination of dry whey products with other wholesome dry ingredients.

J-7. Condensed Whey.--Condensed whey is the product defined in the *Code of Federal Regulations*, Title 21, Section 184.1979(a)(2).

J-8. Grade A Condensed and Dry Whey.--Grade A condensed and dry whey means condensed or dry whey which complies with the applicable provisions of this *Ordinance*. The words "condensed and dry milk products" shall be interpreted to include condensed and dry whey.

J-9. Grade A Whey Products.--Grade A whey products are products which have been produced for use in Grade A pasteurized or aseptically processed milk products and which have been manufactured under the provisions of the *Grade A Condensed and Dry Milk Products and Condensed and Dry Whey--Supplement I to the Grade A Pasteurized Milk Ordinance, 1995 Recommendations*.

K. Reserved for future use.

L. ADULTERATED.--Any condensed or dry milk product shall be deemed to be adulterated if one or more of the conditions described in Section 402 of the *Federal Food, Drug, and Cosmetic Act*, as amended, (21 U.S.C.) exist. (See Appendix G, p. 143)

M. MISBRANDED.--Condensed and dry milk products are misbranded if one or more of the conditions described in Section 403 of the *Federal Food, Drug, and Cosmetic Act, as amended*, (21 U.S.C.) exist. (See Appendix G, p. 143)

N. PASTEURIZATION.--The terms "pasteurization", "pasteurized" and similar terms shall mean the process of heating every particle of milk, milk products, whey and whey products, in properly designed and operated equipment, to one of the temperatures given in the following chart, and held continuously at or above that temperature for at least the corresponding specified time:

Temperature	Time
*63°C (145°F)	30 minutes
*72°C (161°F)	15 seconds
89°C (191°F)	1.0 second
90°C (194°F)	0.5 second
94°C (201°F)	0.1 second
96°C (204°F)	0.05 second
100°C (212°F)	0.01 second

*if the fat content of the milk product or whey is 10 percent or more, or if it contains added sweeteners, or is condensed milk or condensed milk product, the specified temperature shall be increased by 3°C (5°F).

Provided, that nothing in this definition shall be construed as barring any other pasteurization process which has been recognized by the Food and Drug Administration to be equally effective and which is approved by the State regulatory agency.

O. SANITIZATION.--Sanitization is the application of any effective method or substance to a clean surface for the destruction of pathogens, and of other organisms as far as is practicable. Such treatment shall not adversely affect the equipment, the milk, milk products, whey and condensed and dry milk products or the health of consumers, and shall be acceptable to the regulatory agency.

P. REGULATORY AGENCY.--The regulatory agency shall mean the...of the ...[1] or his authorized representative. The term, "regulatory agency",whenever it appears in this *Ordinance*, shall mean the appropriate agency having jurisdiction and control over the matters embraced within this *Ordinance*.

Q. MILK CONDENSING AND/OR DRYING PLANT.--A milk condensing and/or drying plant is a plant in which milk or milk products are condensed, dried or in which milk or milk products are received, separated or otherwise processed for drying and packaging.

R. WHEY CONDENSING AND/OR DRYING PLANT.--A whey condensing and/or drying plant is a plant in which whey is condensed, dried or in which whey is received and processed for drying and packaging.

S. OFFICIAL LABORATORY.--An official laboratory is a biological, chemical or physical laboratory which is under the direct supervision of the State or a local regulatory agency.

T. OFFICIALLY DESIGNATED LABORATORY.--An officially designated laboratory is a commercial laboratory authorized to do official work by the regulatory agency, or a milk industry laboratory officially designated by the regulatory agency for the examination of producer samples of Grade A raw milk for pasteurization and commingled milk tank

truck samples of raw milk for drug residues and bacterial limits.

U. PERSON.--The word "person" shall include any individual, plant operator, partnership, corporation, company, firm, trustee, association or institution.

V. AND/OR.--Where the term "and/or" is used, "and" shall apply where appropriate, otherwise "or" shall apply.

W. MILK TRANSPORT TANK.--A milk transport tank is a vehicle, including the truck and tank, used by a milk hauler to transport bulk shipments of milk, milk products, whey, whey products, condensed whey, or condensed milk products from sources of supply to a whey/milk condensing and/or drying plant.

X. MILK TANK TRUCK.--A milk tank truck is the term used to describe both a bulk milk pickup tanker and a milk transport tank.

Y. BULK MILK PICKUP TANKER.--A bulk milk pickup tanker is a vehicle, including the truck, tank and those appurtenances necessary for its use, used by a milk hauler to transport bulk shipments of milk from a milk plant, receiving station or transfer station as defined in the *Grade A Pasteurized Milk Ordinance-1995 Recommendations of the United States Public Health Service/Food and Drug Administration.*

Z. Drug.--The term drug means (A) articles recognized in the official United States Pharmacopeia, official Homeopathic Pharmacopeia of the United States or official National Formulary or any supplement to any of them; and (B) articles intended for use in the diagnosis, cure, mitigation, treatment or prevention of disease in man or other animals; and (C) articles (other than food) intended to affect the structure or any function of the body of man or other animals; and (D) articles intended for use as a component of any articles specified in clause (A), (B), or (C), but does not include devices or their components, parts or accessories.

SECTION 2. ADULTERATED OR MISBRANDED MILK AND MILK PRODUCTS

No person shall, within the...of ...[1] or its jurisdiction, produce, provide, sell, offer, or expose for sale, or have in possession with intent to sell any condensed and dry milk products intended for use in the commercial preparation of Grade A pasteurized milk products which are adulterated or misbranded. *Provided*, that in an emergency, the sale of condensed and dry milk products which have not been graded, or the grade of which is unknown, may be authorized by the regulatory agency in which case such products shall be labeled "ungraded".

Any adulterated or misbranded milk, milk products, whey and condensed or dry milk products may be impounded by the regulatory agency and disposed of in accordance with applicable laws or regulations.

SECTION 3. PERMITS

It shall be unlawful for any person who does not possess a permit from the regulatory agency of the...of ...[1] to manufacture, bring into, send into, or receive into the...of ...[1] or its jurisdiction, for sale, or to sell, or offer for sale therein, or to have in storage any condensed and dry milk products for use in the commercial preparation of Grade A pasteurized milk products. *Provided*, that brokers, agents, and distributors representing, buying from, and/or selling condensed and dry milk products from or to a plant having a valid permit are not required to have a permit.

Only a person who complies with the requirements of this *Ordinance* shall be entitled to receive and retain such a permit. Permits shall not be transferable with respect to persons and/or locations. *Provided*, that the manufacture of condensed and dry milk products which do not meet the requirements of this *Ordinance* for Grade A condensed or dry milk products or Grade A condensed or dry whey and which are intended for other uses, shall not be construed to violate the terms of this *Ordinance*, if such products are processed, packaged and stored separately and are plainly identified.

It shall be unlawful for any person to manufacture in a plant under a permit for Grade A condensed or dry milk products or Grade A condensed or dry whey in the...of...[1] or its jurisdiction any condensed and dry milk products which do not meet the requirements of this *Ordinance* for Grade A condensed or dry milk products or Grade A condensed or dry whey without a permit from the regulatory authority who shall require that such condensed and dry milk products be processed, packaged and stored separately from Grade A condensed or dry milk products or Grade A condensed or dry whey and that each container of such products be plainly marked in such manner as to prevent confusion of the product with Grade A condensed or dry milk products or Grade A condensed or dry whey.

A permit for the manufacture of Grade A condensed and dry milk products and Grade A condensed and dry whey or condensed and dry milk products which do not meet the requirements of this *Ordinance* for Grade A condensed or dry milk products or Grade A condensed or dry whey shall be suspended by the regulatory agency whenever it has reason to believe a public health hazard exists; or whenever the permit holder has violated any of the applicable requirements of this *Ordinance*; or whenever the permit holder has interfered with the regulatory agency in performance of its duties. *Provided*, that the regulatory agency shall in all cases except

where the milk, milk product, whey, or condensed and dry milk products involved creates, or appears to create, an imminent hazard to public health; or in case of a willful refusal to permit authorized inspection, serve upon the holder a written notice of intent to suspend permit, which notice shall specify with particularity the violation(s) in question and afford the holder such reasonable opportunity to correct each violation(s) as may be agreed to by the parties, or in the absence of agreement, fixed by the regulatory agency, before making any order of suspension effective. A suspension of permit shall remain in effect until the violation(s) have been corrected to the satisfaction of the regulatory agency.

Upon notification, acceptable to the regulatory agency, by any person whose permit has been suspended, or upon application within 48 hours of any person who has been served with a notice of intention to suspend, and in the latter case before suspension, the regulatory agency shall within 72 hours proceed to a hearing to ascertain the facts of such violation(s) or interference and upon evidence presented at such hearing shall affirm, modify or rescind the suspension or intention to suspend.

Upon repeated violation(s), the regulatory agency may revoke such permit following reasonable notice to the permit holder and an opportunity for a hearing. This section is not intended to preclude the institution of court action as provided in Sections 5 and 6.

SECTION 4. LABELING

All containers and packages enclosing condensed and dry milk products defined in Section 1 of this *Ordinance* shall be labeled in accordance with the applicable requirements of the *Federal Food, Drug, and Cosmetic Act as amended*, *The National Labeling and Education Act of 1990*, and regulations developed thereunder, and in addition shall be conspicuously and permanently labeled or marked with:

1. The name of the contents as given in the definitions of this *Ordinance* if used, and the common name of the ingredients;
2. The words "Grade A";
3. The identity of the plant in which the product was manufactured or processed by either name and address or by permit number and identity of the regulatory agency issuing such permit; and in the latter case, the name and address of the distributor shall be shown by a statement, such as "Distributed by..."; and
4. A code or lot number identifying the contents with a specific date, run, or batch of the product, and the quantity of the contents of the container.
5. The word "Goat" or "Sheep" shall precede the name of the milk or milk product, whey or whey product when the product is or is made from goat or sheep milk respectively.

Milk tank trucks transporting milk, whey, condensed whey or condensed milk products to a drying plant from another milk plant, receiving or transfer station are required to be marked with the name and address of the milk plant or hauler and shall be sealed; in addition a shipping statement shall be prepared for each shipment containing at least the following information:

1. Shipper's name, address, and permit number.

2. Permit identification of hauler, if not employee of shipper.

3. Point of origin of shipment.

4. Tanker identity number.

5. Name of product.

6. Weight of product.

7. Grade of product.

8. Temperature of product when applicable.

9. Date of shipment.

10. Name of supervising regulatory agency at the point of origin.

11. Whether the contents are raw, pasteurized, or in the case of cream, lowfat, or skim milk, whether it has been heat treated.

12. Seal number on inlet and outlet.

One copy of the shipping statement shall be retained by the consignor, one by the common carrier and at least two copies shall be delivered to the consignee with the shipment. The consignee shall forward at least one copy to the local regulatory agency or State authority in the receiving area. Upon request, the regulatory agency or State authority shall return to the official supervising agency the following information:

1. Date and time of arrival of product.

2. Temperature of product.

3. Bacterial count and butterfat test of product on individual shipment.

4. Adequacy of seals.

5. Other pertinent information.

Entries made on shipping statements by consignors or consignees shall be legible. When the interstate shipment is derived from more than one point of origin, separate shipping statements for each of the sources involved shall accompany the shipment. Shipping statements shall be retained on file for a period of at least 6 months.

Required labeling information shall be in letters of an acceptable size, kind and color satisfactory to the regulatory agency and shall contain no marks or words which are misleading. Other information, such as a registered trademark design, which is not misleading and does not obscure any of the labeling requirements above may also be included.

Each bulk milk pickup tanker load of milk shall be accompanied by documentation (weight ticket or manifest) which shall include the IMS BTU Identification Number(s) of the IMS Listed Plant Number (for farm groups listed with a plant).

SECTION 5.
INSPECTION OF CONDENSING AND/OR DRYING PLANTS

Each condensing and/or drying plant(s) whose products are intended for use in the commercial preparation of Grade A pasteurized milk products within...of...[1] or its jurisdiction, shall be inspected by the regulatory agency prior to the issuance of a permit. Following the issuance of a permit, each condensing and/or drying plant shall be inspected at least once every three months. Should the violation of any requirement set forth in Section 7 be found to exist on an inspection, a second inspection shall be required after the time deemed necessary to remedy the violation, but not before three days; this second inspection shall be used to determine compliance with the requirements of Section 7. Any violation of the same requirement of Section 7 on such second inspection shall call for permit suspension in accordance with Section 3 and/or court action. *Provided*, that when the regulatory agency finds that a critical processing element violation involving:

1. Proper pasteurization, whereby every particle of milk or milk product, whey or whey product may not have been heated to the proper temperature and held for the required

time in properly designed and operated equipment; or

2. A cross-connection exists whereby direct contamination of pasteurized milk, milk product, whey or whey product is occurring; or

3. Conditions exist whereby direct contamination of pasteurized milk, milk product, whey, or whey product is occurring.

The regulatory agency shall take immediate action to prevent further processing of such milk, milk product, whey or whey product until such violations of critical processing element(s) have been corrected. Should correction of such critical processing element(s) not be accomplished immediately, the regulatory agency shall take prompt action to suspend the permit as provided for in Section 3 of this *Ordinance*.

One copy of the inspection report shall be handed to the operator, or other responsible person or be posted in a conspicuous place on an inside wall of the establishment. Said inspection report shall not be defaced and shall be made available to the regulatory agency upon request. An identical copy of the inspection report shall be filed with the records of the regulatory agency.

The regulatory agency shall also make such other inspections and investigations as are necessary for the enforcement of this *Ordinance*.

Every permit holder shall, upon request of the regulatory agency, permit at any reasonable time access of officially designated persons to all parts of the establishment or facilities to determine compliance with the provisions of this *Ordinance*. A distributor or plant operator shall furnish the regulatory agency, upon request, for official use only, a true statement of the actual quantities of milk, milk products and condensed and dry milk products of each grade purchased and sold, and a list of all sources of such products, records of inspections, tests and pasteurization time and temperature records.

It shall be unlawful for any person who in an official capacity obtains any information under the provisions of this *Ordinance* which is entitled to protection as a trade secret (including information as to the quantity, quality, source or disposition of milk, milk products and condensed and dry milk products, or results of inspections or tests thereof) to use such information to their own advantage or to reveal it to any unauthorized person.

SECTION 6.
THE EXAMINATION OF MILK AND MILK PRODUCTS

It shall be the responsibility of the milk hauler to collect a representative sample of milk from each farm bulk tank prior to transferring milk from a farm bulk tank, truck or other container. All samples shall be collected and delivered to a milk plant, receiving station, transfer station or other location approved by the regulatory agency.

During any consecutive six months, at least four samples of raw milk for pasteurization shall be collected, in at least four separate months, except when three months show a month containing two sampling dates separated by at least 20 days, and delivered in accordance with this section from each producer. These samples shall be obtained under the direction of the regulatory agency or shall be taken from each producer under the direction of the regulatory agency.

During any consecutive six months, at least four samples of raw milk for pasteurization, collected in at least four separate months, except when three months show a month containing two sampling dates separated by at least 20 days, shall be collected by the

regulatory agency, from each milk plant after receipt of the milk by the plant and prior to pasteurization.

During any consecutive six months, at least four samples of heat-treated milk products, from plants offering such products for sale, shall be collected in at least four separate months by the regulatory agency.

During any consecutive six months, at least four samples of each Grade A dry milk product, four samples of each Grade A condensed and Grade A dry whey product being manufactured and defined in this *Ordinance*, shall be collected in at least four separate months, except when three months show a month containing two sampling dates separated by at least 20 days, from every milk plant, by the regulatory agency.

If production of any Grade A product as defined in this *Ordinance* is not on a yearly basis, at least 5 samples shall be taken within a continuous production period.

Required bacterial counts, somatic cell counts and cooling temperature checks shall be performed on raw milk for pasteurization. In addition, drug tests on each producer's milk shall be conducted at least four times during any consecutive 6 months. Required bacterial counts, drug tests, coliform determinations, phosphatase and cooling temperature checks shall be performed on Grade A pasteurized products defined in this *Ordinance*.

Whenever two of the last four consecutive bacterial counts, somatic cell count, coliform determinations, or cooling temperatures, taken on separate days, exceed the limit of the standard for the products as defined in this *Ordinance*, the regulatory agency shall send a written notice thereof to the person concerned. This notice shall be in effect so long as two of the last four consecutive samples exceed the limit of the standard. An additional sample shall be taken within 21 days of the sending of such notice, but not before the lapse of 3 days. Immediate suspension of permit, in accordance with Section 3, and/or court action shall be instituted whenever the standard is violated by three of the last five bacterial counts, coliform determinations, cooling temperatures or somatic cell counts.

Whenever a phosphatase test is positive, the cause shall be determined. Where the cause is improper pasteurization, it shall be corrected and any milk or milk product involved shall not be offered for sale.

Whenever a pesticide residue test is positive, an investigation shall be made to determine the cause and the cause shall be corrected. An additional sample shall be taken and tested for pesticide residues and no products as defined in this *Ordinance* shall be offered for sale until it is shown by a subsequent sample to be free of pesticide residues or below the actionable levels established for such residues.

Whenever a drug residue test is positive, an investigation shall be made to determine the cause, and the cause shall be corrected in accordance with the provisions of Appendix N, page 197.

Samples shall be analyzed at an official or appropriate officially designated laboratory. All sampling procedures and required laboratory examinations shall be in substantial compliance with the ... Edition of *Standard Methods for the Examination of Dairy Products* of the American Public Health Association, and the ... Edition of *Official Methods of Analysis of the Association of Official Analytical Chemists*. (Insert edition number current at time of adoption.) Such procedures, including the certification of sample collectors and examinations shall be evaluated in accordance with the *Evaluation of Milk Laboratories, United States Public Health Service/Food and Drug*

Administration.

Other examinations and tests shall be conducted to determine compliance with the applicable provisions of this *Ordinance*, as the regulatory agency shall require, in a laboratory acceptable to the regulatory agency. Examinations and tests to detect adulterants, including pesticides, shall be conducted as the regulatory agency requires. Assays of products as defined in this *Ordinance*, to which vitamin(s) A and/or D have been added, shall be made at least annually in a laboratory which has been certified by the U. S. Food and Drug Administration and which is acceptable to the regulatory agency.

In addition, all facilities fortifying products with vitamins must keep volume control records. These volume control records must cross reference the form and amount of vitamin D, vitamin A and/or vitamin A & D used with the amount of products produced and indicate a percent of expected use, plus or minus.

SECTION 7. STANDARDS FOR MILK, MILK PRODUCTS AND CONDENSED AND DRY MILK PRODUCTS

Grade A raw milk for pasteurization, Grade A raw milk products, Grade A condensed milk, Grade A dry milk products, Grade A condensed whey and Grade A dry whey shall be processed, pasteurized, and manufactured to conform with the following chemical, physical, bacteriological, and temperature standards, and the sanitation requirements of this section.

No process or manipulation other than pasteurization, processing methods integral therewith, and appropriate refrigeration shall be applied to milk, milk products, whey or whey products for the purpose of removing or deactivating microorganisms. *Provided*, that in the bulk shipment of cream, skim milk, or lowfat milk, the heating of the raw milk, one time, to temperatures greater than 52ºC (125ºF), but less than 72ºC (161ºF), for separation purposes is permitted when resulting shipments of bulk cream, skim milk, or lowfat milk are labeled heat-treated. In the case of heat-treated cream the cream may be further heated to less than 75ºC (166ºF) in a continuing heating process and immediately cooled to 7ºC (45ºF) or less when necessary for enzyme deactivation (such as lipase reduction) for a functional reason.

Milk and milk products used in the manufacture of Grade A condensed and dry milk products shall comply with the requirements for Grade A raw milk for pasteurization as provided in (cite ordinance adopting the *Grade A Pasteurized Milk Ordinance--1995 Recommendations of the United States Public Health Service/Food and Drug Administration*) and shall be produced under the routine supervision of the regulatory agency, or produced under provisions which are substantially equivalent to the requirements of said ordinance, and which are enforced with equal effectiveness as determined by a milk sanitation rating.

Whey shall be from cheese made from Grade A raw milk for pasteurization provided in (cite ordinance adopting the *Grade A Pasteurized Milk Ordinance--1995 Recommendations of the United States Public Health Service/Food and Drug Administration*).

Whey used in the manufacture of Grade A condensed and dry whey shall be produced in a cheese plant that complies with Items 1p, 2p, 3p, 4p, 5p, 6p, 7p, 8p, 9p, 10p, 11p, 12p, 13p, 14p, 15p, 17p, 20p, 21p and 22p as provided in (cite ordinance adopting the *Grade A*

Pasteurized Milk Ordinance--1995 Recommendations of the United States Public Health Service/Food and Drug Administration).

Whey shall be from:

1. Cheese made from Grade A raw milk for pasteurization, which has been pasteurized prior to use, in accordance with Item 16p of the *Grade A Pasteurized Milk Ordinance--1995 Recommendations of the United States Public Health Service/Food and Drug Administration*; or

2. Cheese made from Grade A raw milk for pasteurization, which has been heat-treated to a temperature of at least 64ºC (147ºF) and held continuously at that temperature for at least 21 seconds or to at least 68ºC (153ºF) and held continuously at that temperature for at least 15 seconds, in equipment meeting the pasteurization requirements provided in (cite ordinance adopting the *Grade A Pasteurized Milk Ordinance--1995 Recommendations of the United States Public Health Service/Food and Drug Administration*). *Provided*, that this requirement shall not be construed as barring any other heat treatment process which has been recognized by the United States Public Health Service/Food and Drug Administration to be equally efficient in the destruction of staphylococcal organisms and which is approved by the State regulatory agency.

Buttermilk shall be from butter made from Grade A cream which has been pasteurized prior to use in accordance with Item 16p of the *Grade A Pasteurized Milk Ordinance--1995 Recommendations of the United States Public Health Service/Food and Drug Administration*. (NOTE: See the *Code of Federal Regulations*, Title 7, Section 58.334 for time and temperature requirements for the pasteurization of cream for butter making). *Provided*, that this requirement shall not be construed as barring any other heat treatment process which has been recognized by the United States Public Health Service/Food and Drug Administration to be equally efficient in the destruction of staphylococcal organisms and which is approved by the State regulatory agency.

TABLE 1. Chemical, Physical, Bacteriological and Temperature Standards		
GRADE A RAW MILK FOR PASTEURIZATION	Temperature	Cooled to 7ºC (45ºF) or less within two hours after milking. *Provided*, that the blend temperature after the first and subsequent milkings does not exceed 10ºC (50ºF).
	Bacterial limits	Not to exceed 300,000 per ml as commingled milk prior to pasteurization.
	Drugs	No positive results on drug residue detection methods as referenced in Section 6 - Laboratory Techniques.
GRADE A PASTEURIZED MILK AND MILK PRODUCTS AND BULK SHIPPED HEAT-TREATED MILK PRODUCTS	Temperature	Cooled to 7ºC (45ºF) or less and maintained thereat.
	Bacterial limits*	20,000 per ml.
	Coliform**	Not to exceed 10 per ml. *Provided*, that in the case of bulk milk transport tank shipments, shall not exceed 100 per ml.
	Phosphatase**	Less than 1 microgram per ml by the Scharer Rapid Method (less than 500 milliunits/L by Fluorometric Procedure) or equivalent.
	Drugs	No positive results on drug residue detection methods as referenced in Section 6 - Laboratory Techniques which have been found to be acceptable for use with pasteruized milk products and heat-treated milk products.
GRADE A PASTEURIZED CONDENSED MILK AND CONDENSED SKIM MILK	Temperature	Cooled to 7ºC (45ºF) or less and maintained thereat unless drying is commenced immediately after condensing.
	Bacterial limits	Not to exceed 30,000 per gram.
	Coliform	Not to exceed 10 per gram. *Provided*, that in the case of bulk milk transport tank shipments shall not exceed 100 per ml.
	Phosphatase	Less than 1 microgram per ml by Sharer Rapid Method or equivalent.
	Drugs	No positive results on drug residue detection methods as referenced in Section 6 - Laboratory Techniques which have been found to be acceptable for use with condensed milk and condensed skim milk.

GRADE A NONFAT DRY MILK	No More than: Butterfat Moisture Titratable acidity Solubility index Bacterial estimate Coliform Scorched particles disc B Drugs	 1.25% 4.00% 0.15% 1.25ml. 30,000 per gram. 10 per gram. 15.0 per gram. No positive results on drug residue detection methods as referenced in Section 6 - Laboratory Techniques which have been found to be acceptable for use with nonfat dry milk.
GRADE A WHEY FOR CONDENSING	Temperature Drugs	Maintained at a temperature of 45ºF (7ºC) or less, or 63ºC (145ºF) or greater, except for acid-type whey with a titratable acidity of 0.40% or above, or a pH of 4.6 or below. No positive results on drug residue detection methods as referenced in Section 6 - Laboratory Techniques which have been found to be acceptable for use with whey.
GRADE A PASTEURIZED CONDENSED WHEY	Temperature Bacterial limit Coliform limit Phosphatase Drugs	Cooled to 7ºC (45ºF) or less during crystallization, within 18 hours of condensing. Not to exceed 30,000 per gram. Not to exceed 10 per gram. Less than 1 microgram per ml by Sharer Rapid Method or equivalent. No positive results on drug residue detection methods as referenced in Section 6 - Laboratory Techniques which have been found to be acceptable for use with condensed whey.
GRADE A DRY WHEY, GRADE A DRY WHEY PRODUCTS, GRADE A DRY BUTTERMILK, AND GRADE A DRY BUTTERMILK PRODUCTS	Bacterial limit Coliform limit Drugs	Not to exceed 30,000 per gram. Not to exceed 10 per gram. No positive results on drug residue detection methods as referenced in Section 6 - Laboratory Techniques which have been found to be acceptable for use with dry whey, dry whey products, dry buttermilk and dry buttermilk products.

* Not applicable to cultured products.

** Not applicable to bulk shipped heat-treated milk products

SANITATION REQUIREMENTS FOR GRADE A CONDENSED MILK AND DRY MILK PRODUCTS AND CONDENSED AND DRY WHEY

All condensing and/or drying plants shall comply with all items of this section.

Facilities for the cleaning and sanitizing of milk tank trucks shall comply with Items 1p, 4p, 6p, 7p, 8p, 9p, 10p, 11p, 12p, 14p, 15p, 20p, and 22p; and as climatic and operating conditions require, the applicable provisions of Items 2p and 3p. *Provided*, that in every case, overhead protection shall be provided.

ITEM 1p. FLOORS--CONSTRUCTION

The floors of all rooms in which milk, milk products, whey, whey products and condensed and dry milk products are processed, handled, packaged or stored, or in which containers, equipment, and utensils are washed, shall be constructed of concrete or other equally impervious and easily cleanable material; and shall be smooth, properly sloped, provided with trapped drains, and kept in good repair. *Provided*, that cold-storage rooms used for storing milk, milk products, whey and whey products need not be provided with floor drains when the floors are sloped to drain to one or more exits. *Provided further*, that storage rooms for storing dry ingredients, packaged dry ingredients and/or packaged dry milk products, dry whey products and/or packaging materials need not be provided with drains; and the floors may be constructed of tightly joined wood.

ITEM 2p. WALLS AND CEILINGS--CONSTRUCTION

Walls and ceilings of rooms in which milk, milk products, whey, whey products and condensed and dry milk products are handled, processed, packaged or stored, or in which containers, utensils, and equipment are washed, shall have a smooth, washable, light-colored surface, in good repair.

ITEM 3p. DOORS AND WINDOWS

Effective means shall be provided to prevent the access of flies and rodents. All openings to the outside shall have solid doors or glazed windows which shall be closed during dusty weather.

ITEM 4p. LIGHTING AND VENTILATION

All rooms in which milk, milk products, whey, whey products and condensed or dry milk products are processed, handled, stored or packaged and/or in which containers, equipment, and utensils are washed shall be well lighted and well ventilated.

ITEM 5p. SEPARATE ROOMS

There shall be separate rooms for:

1. The pasteurizing, processing, cooling, reconstitution, condensing and drying of milk, milk products, whey, whey products, or condensed products.
2. Packaging of dry products.
3. The cleaning of milk cans and containers and dry product containers.
4. Cleaning and sanitizing facilities for milk tank trucks in plants receiving milk or whey in such tanks.

5. Receiving cans of milk and milk products in plants receiving such cans.

Rooms in which milk, milk products whey or whey products are handled, processed, stored, condensed, dried and packaged, or in which containers, utensils and equipment are washed or stored, shall not open directly into any stable or any room used for domestic purposes. All rooms shall be of sufficient size for their intended purposes.

ITEM 6p. TOILET-SEWAGE DISPOSAL FACILITIES

Every plant shall be provided with toilet facilities conforming with the regulations of the...of...[1]. Toilet rooms shall not open directly into any room in which milk, milk products, whey, whey products or condensed and dry milk products are processed. Toilet rooms shall be completely enclosed and shall have tight-fitting, self-closing doors. Dressing rooms, toilet rooms and fixtures shall be kept in a clean condition, in good repair, and shall be well ventilated and well lighted. Sewage and other liquid wastes shall be disposed of in a sanitary manner.

ITEM 7p. WATER SUPPLY

Water for plant purposes shall be from a supply properly located, protected, and operated and shall be easily accessible, adequate and of a safe, sanitary quality.

ITEM 8p. HAND-WASHING FACILITIES

Convenient hand-washing facilities shall be provided, including hot and cold and/or warm running water, soap and individual sanitary towels or other approved hand-drying devices. Hand-washing facilities shall be kept in a clean condition and in good repair.

ITEM 9p. PLANT CLEANLINESS

All rooms in which milk, milk products, whey, whey products and condensed and dry milk products are handled, processed, or stored, and/or in which containers, utensils, or equipment are washed or stored, shall be kept clean, neat, and free of evidence of insects and rodents. Only equipment directly related to processing operations or to handling of containers, utensils and equipment shall be permitted in the pasteurizing, processing, cooling, packaging and bulk milk or whey storage rooms.

ITEM 10p. SANITARY PIPING

All sanitary piping, fittings, and connections which are exposed to milk, milk products, whey, whey products or condensed milk products or condensed whey or from which liquids may drip, drain, or be drawn into milk, milk products, whey, whey products, condensed and dry milk products shall consist of smooth, impervious, corrosion-resistant, nontoxic, easily cleanable material. All piping shall be in good repair. Milk, milk products, whey, whey products, condensed milk products and condensed whey shall be conducted from one piece of equipment to another only through sanitary piping.

ITEM 11p.
CONSTRUCTION AND REPAIR OF CONTAINERS AND EQUIPMENT

All multiuse containers and equipment with which milk, milk products, whey, whey products and condensed and dry milk products come into contact shall be of smooth, impervious, corrosion-resistant, nontoxic material; shall be constructed for ease of cleaning; and shall be kept in good repair. All single-service containers, closures, gaskets and other articles with which milk, milk products, whey, whey products and condensed and dry milk products come in contact shall be nontoxic, and shall have been manufactured, packaged, transported and handled in a sanitary manner. Articles intended for single-service use shall not be reused.

ITEM 12p.
CLEANING AND SANITIZING OF CONTAINERS AND EQUIPMENT

The product-contact surfaces of all multiuse containers, utensils and equipment used in the processing, drying, packaging, storing, handling and transporting of milk, milk products, whey, whey products and condensed and dry milk products shall be effectively cleaned and sanitized after each use. *Provided*, That cloth-collector systems used on dryers shall be cleaned and sanitized or purged at intervals and by methods recommended by the manufacturer and approved by the regulatory agency.

ITEM 13p.
STORAGE OF CLEANED CONTAINERS AND EQUIPMENT

After cleaning, all multiuse milk, milk product, whey, whey products and condensed and dry milk product containers, utensils and equipment shall be transported and stored to assure complete drainage, and shall be protected from contamination before use.

ITEM 14p.
STORAGE OF SINGLE-SERVICE CONTAINERS, UTENSILS AND MATERIALS

Single-service parchment paper, containers, gaskets, liners, bags and other single-service articles for use in contact with milk, milk products, whey, whey products and condensed and dry milk products shall be purchased and stored in sanitary wrappings, or cartons; shall be kept therein in a clean, dry place until used; and shall be handled in a sanitary manner.

ITEM 15p.
PROTECTION FROM CONTAMINATION

Condensing and/or drying plants, equipment and facilities shall be located and conducted to prevent any contamination of milk, milk products, whey, condensed and dry milk products, ingredients, equipment, containers and utensils. All milk, milk products, whey, whey products, condensed and dry milk products or ingredients which have been spilled, overflowed or leaked shall be discarded. The processing or handling of products other than Grade A milk, milk products, whey products, and whey in the condensing and/or drying plant or dry milk packaging plant shall be performed to preclude the contamination of such Grade A products. The storage, handling, and use of

poisonous or toxic materials shall be performed to preclude the contamination of milk, milk products, whey and whey products or ingredients of such milk, milk products, whey and whey products or the product-contact surfaces of all equipment, containers or utensils.

ITEM 16p. PASTEURIZATION

Pasteurization shall be performed as defined in Section 1, Definition P of this *Ordinance*. In all cases, pasteurization of raw milk, raw milk products, whey or whey products shall be performed before the raw milk, raw milk products, whey, or whey products enter the evaporator or condensing equipment and shall be performed in the plant in which the evaporation or condensing is done. All condensed milk transported to a drying plant shall be re-pasteurized at the plant at which it is dried. If condensed whey contains at least 40 percent total solids and has been partially crystallized by cooling, it may be transported to a separate drying plant for drying without re-pasteurization provided the following conditions are complied with:

1. The condensed, partially crystallized whey is cooled and maintained at 7ºC (45ºF) or less;
2. Milk transport tanks used to transport the condensed, partially crystallized whey shall be washed and sanitized immediately prior to filling and are sealed after filling until unloading;
3. Separate unloading pumps and pipelines shall be provided and used only for the unloading of the condensed, partially crystallized whey. Such pumps and pipelines shall be cleaned and sanitized as a separate cleaning circuit.

ITEM 17p. COOLING OF MILK, MILK PRODUCTS, WHEY, WHEY PRODUCTS, CONDENSED MILK PRODUCTS AND CONDENSED WHEY

All raw milk and milk products shall be maintained at 7ºC (45ºF) until processed. All whey and whey products for condensing shall be maintained at a temperature of 7ºC (45ºF) or less; or 63ºC (145ºF) or greater until processed, except that acid-type whey with a titratable acidity of 0.40% or above, or a pH of 4.6 or below, is exempted from these temperature requirements. All pasteurized milk and milk products, pasteurized whey and whey products and condensed milk products, shall be cooled immediately in approved equipment to a temperature of 7ºC (45ºF) or less, unless drying is commenced immediately after condensing. All condensed whey shall be cooled during the crystallization process to 7ºC (45ºF) or less within 18 hours of condensing. All pasteurized milk and milk products, pasteurized whey and whey products and condensed milk products shall be stored at a temperature of 7ºC (45ºF) or less and maintained thereat until further processed. Every room or tank in which milk, milk products, whey, whey products, condensed milk products and condensed whey are stored shall be equipped with an accurate thermometer.

ITEM 18p. PACKAGING AND CONTAINER FILLING

The filling of condensed and dry milk product containers shall be done only by mechanical equipment and by methods which preclude contamination. Dry milk products, dry whey and dry whey products shall be packaged in new containers which protect the contents from contamination, and after packaging, shall be stored in a sanitary manner. Condensed and dry milk products may be transported in sealed containers in a sanitary manner from one plant to another for further processing and/or packaging. Condensed and dry milk product packaging containers shall be stored in a sanitary manner.

ITEM 19p. CONTAINER CLOSURE, SEALING AND STORAGE

Closing or sealing of dry milk product and dry whey and dry whey product containers shall be done in a sanitary manner. The closing and/or sealing of individual containers of condensed milk products and condensed whey and whey products shall be done by methods which preclude product contamination.

ITEM 20p. PERSONNEL--CLEANLINESS

Hands shall be thoroughly washed before commencing plant functions and as often as may be required to remove soil and contamination. No employee shall resume work after visiting the toilet room without thoroughly washing their hands. All persons, while engaged in the processing, pasteurization, handling, storage, transportation or packaging of milk, milk products, whey, whey products, condensed and dry milk products, containers, equipment and utensils shall wear clean outer garments. All persons, while engaged in the processing of milk, milk products, whey, whey products, condensed and dry milk products, shall wear adequate head coverings and shall not use tobacco.

ITEM 21p. VEHICLES

All vehicles used for transportation of milk, milk products, whey, whey products, condensed milk products and condensed whey shall be constructed and operated so that the milk, milk products, whey, whey products, condensed milk products and condensed whey are maintained at 7°C (45°F) or less, and are protected from sun, from freezing and from contamination. Milk tank cars, milk tank trucks, and portable shipping bins shall not be used to transport or contain any substances that may be toxic or harmful to humans. Dry milk products and dry whey and whey products shall be transported in a sanitary manner.

ITEM 22p. SURROUNDINGS

Milk condensing and/or drying plant and whey condensing and/or drying plant surroundings shall be kept neat, clean and free from conditions which might attract or harbor flies, other insects and rodents, or which otherwise constitute a nuisance.

SECTION 8.
CONDENSED AND DRY MILK PRODUCTS AND CONDENSED AND DRY WHEY FROM POINTS BEYOND LIMITS OF ROUTINE INSPECTION

Condensed and dry milk products and condensed and dry whey from points beyond the limits of routine inspection of the.... of....[1] or its jurisdiction, may be sold in...[1] or its jurisdiction for use in the commercial preparation of Grade A pasteurized milk products provided they are produced and processed under regulations which are substantially equivalent to this *Ordinance* and have been awarded an acceptable milk sanitation compliance and enforcement rating, made by a State Milk Sanitation Rating Officer certified by the Food and Drug Administration.

SECTION 9.
FUTURE CONDENSING PLANTS AND DRYING PLANTS

Properly prepared plans for all condensing plants and drying plants regulated under this *Ordinance* which are hereafter constructed, reconstructed or extensively altered, shall be submitted to the regulatory agency for written approval before the work is begun.

Note.--The regulatory agency should give prompt consideration to these plans and to providing written approval within 60 days following their submission.

SECTION 10.
PERSONNEL HEALTH

No person affected with any disease capable of being transmitted to others through the contamination of food shall work at any condensing or drying plant in any capacity which brings them into direct contact with finished products such as condensed and dry milk products, or which brings them into direct contact with associated finished product contact surfaces.

SECTION 11.
PROCEDURE WHEN INFECTION OR HIGH RISK OF INFECTION IS DISCOVERED

When a person who may have handled pasteurized condensed and/or dry milk, milk products, whey, and whey products and their associated product contact surfaces, meets one or more of the conditions specified in the Administrative Procedure of Section 10, the regulatory agency is authorized to require any or all of the following measures:

1. The immediate restricting of that person from duties which require handling finished product, such as condensed and dry milk products or the handling of related product contact surfaces. This restriction may be lifted after an appropriate medical clearance or cessation of symptoms or both, according to the following criteria:

Table 2 Removal of Restrictions When Infection or High Risk of Infection is Discovered	
Health Status	Removing Restrictions
a. Is diagnosed with an illness due to Hepatitis A virus, Salmonella typhi, Shigella species, Norwalk and Norwalk-like Viruses, Staphylococcus aureus, Streptococcus pyogenes, Escherichia coli 0157:H7, enterohemorrhagic Escherichia coli, enterotoxigenic Escherichia coli, Campylobactor jejuni, Entamoeba histolytica, Giardia lamblia, Non-typhoidal Salmonella, Rotovirus, Taenia solium, Yersinia enterocolitica, Vibrio cholerae O1 or other infectious or communicable disease that has been declared by the Secretary of Health and Human Services to be transmissible to others through the handling of food or has been clearly shown to be so based upon verifiable epidemiological data.	Restrictions lifted by medical clearance.
b. Meeting a high risk scenario as specified in Part II, Section 10 (2 or 3) and/or experiencing symptoms in Part II, Section 10 (4, 5 or 6).	Restrictions lifted when symptoms cease or medical documentation is provided that infection does not exist.
c. Asymptomatic, but stools positive for Salmonella typhi, Shigella or Escherichia coli 0157:H7.	Restrictions lifted by medical clearance.
d. Past illness from Salmonella typhi, Shigella, Escherichia coli 0157:H7 or other human pathogens for which humans have been determined to be carriers.	Restrictions lifted by medical clearance.
e. In the case of diagnosed or suspected Hepatitis A, onset of jaundice within the last seven (7) days.	Restrictions lifted by medical clearance.
f. In the case of diagnosed or suspected Hepatitis A, onset of jaundice occurred more than seven (7) days ago.	Restrictions lifted by medical clearance or jaundice ceases.

2. The immediate exclusion of the effected dairy products from distribution and use when medically appropriate (i.e., a medical evaluation of the sequence of events indicates that contamination of product may have occurred).

3. The immediate requesting of medical and bacteriological examination of the person at risk. (Note: Persons at risk who decline to be examined may be reassigned to duties where they will not be required to handle finished products, such as milk, milk products, whey, whey products, condensed and dry milk products, and associated product contact surfaces).

SECTION 12. ENFORCEMENT

This *Ordinance* shall be enforced by the regulatory agency in accordance with the administrative procedures of Part II of the *Grade A Condensed and Dry Milk Products and Condensed and Dry Whey--Supplement I to the Grade A Pasteurized Milk Ordinance, 1995 Recommendations*, a certified copy of which shall be on file at the office of ...[2] and in conjunction with (cite ordinance adopting the *Grade A Pasteurized Milk Ordinance--1995 Recommendations of the United States Public Health Service/Food and Drug Administration*). Where mandatory compliance with provisions of the appendixes is specified, such provisions shall be deemed a requirement of the *Ordinance*.

SECTION 13. PENALTIES

Any person who shall violate any of the provisions of this *Ordinance* shall be guilty of a misdemeanor, and upon conviction thereof, shall be punished by a fine of not more than $... and/or such persons may be enjoined from continuing such violations. Each day upon which such a violation occurs shall constitute a separate violation.

SECTION 14. REPEAL AND DATE OF EFFECT

All ordinances and parts of ordinances in conflict with this *Ordinance* shall be repealed 12 months after the adoption of this *Ordinance*; at which time, this *Ordinance* shall be in full force and effect, as provided by law.

SECTION 15. SEPARABILITY CLAUSE

Should any section, paragraph, sentence, clause, or phrase of this *Ordinance* be declared unconstitutional or invalid for any reason, the remainder of this *Ordinance* shall not be affected thereby.

FOOTNOTES

In the interest of clarity and to provide easy access to their information, all numbered footnotes have been removed from the body of this publication and are assembled in this section. A numerical reference in the text will always relate to its like numbered footnote in this section.

1. Substitute proper legal jurisdiction here and in all similar places throughout the *Ordinance*.

2. A certified copy may be secured from the Food and Drug Administration, (HFS-626) 200 "C" Street, S.W., Washington, DC 20204.

3. Whey, caseinates, lactalbumin and other milk derived ingredients are required to be derived from a Grade A raw milk source.

PART II

Grade A Condensed and Dry Milk Products and Condensed and Dry Whey--Supplement I to the Grade A Pasteurized Milk Ordinance, 1995 Recommendations

An ordinance defining "condensed milk", "dry milk products", "condensed whey", "dry whey", "pasteurization", etc.; prohibiting the sale of adulterated or misbranded condensed milk and dry milk products and condensed and dry whey; regulating the production, manufacture, packaging, labeling, storage, transportation, handling, and sale of condensed and dry milk products and condensed and dry whey, for use in the commercial preparation of Grade A pasteurized milk products; this ordinance to supplement (cite ordinance adopting the *Grade A Pasteurized Milk Ordinance--1995 Recommendations of the United States Public Health Service/Food and Drug Administration)* and to be enforced in conjunction with and in addition thereto.

Be it ordained by the...of ...[a.1] as follows:

[a.] Numbered footnotes are assembled on P. 23 and P. 82.

SECTION 1. DEFINITIONS

The following definitions shall apply in the interpretation and the enforcement of this *Ordinance*:

A. MILK.--Milk is the product defined in the *Code of Federal Regulations*, Title 21, Section 131.110.

A-1. Dry Whole Milk.--Dry whole milk is the product defined in the *Code of Federal Regulations*, Title 21, Section 131.147.

A-2. Goat Milk.--Goat milk is the normal lacteal secretion, practically free of colostrum, obtained by the complete milking of one or more healthy goats. The word "milk" shall be interpreted to include goat milk.

A-3. Sheep Milk.--Sheep milk is the normal lacteal secretion, practically free of colostrum, obtained by the complete milking of one or more healthy sheep. The word "milk" shall be interpreted to include sheep milk.

B. CREAM--Cream is the product defined in the *Code of Federal Regulations*, Title 21, Section 131.3(a).

B-1. Dry Cream.--Dry cream is the product defined in the *Code of Federal Regulations*, Title 21, Section 131.149.

C. SKIM MILK.--Skim milk is the product defined in the *Code of Federal Regulations*, Title 21, Section 131.143.

D. CONDENSED MILK.-- Condensed milk is an alternate name for concentrated milk. This definition is not intended to include such products as sterilized milk and milk products hermetically sealed in a container and processed, either before or after sealing so as to prevent microbial spoilage, or evaporated milk, or sweetened condensed milk, except when they are combined with other substances in the commercial preparation of any pasteurized milk or milk product defined in the *Grade A Pasteurized Milk Ordinance--1995 Recommendations of the United States Public Health Service/Food and Drug Administration*.

D-1. Grade A Concentrated (Condensed) Skim Milk.--Grade A concentrated/condensed skim milk means concentrated/condensed skim milk which complies with the applicable provisions of this *Ordinance.*

E. CONCENTRATED MILK.-- Concentrated milk is the product defined in the *Code of Federal Regulations,* Title 21, Section 131.115.

E-1. Concentrated Milk Products.--Concentrated milk products shall be taken to mean and to include homogenized concentrated milk, concentrated skim milk, concentrated lowfat milk, and concentrated milk or concentrated skim milk, and which, when combined with potable water in accordance with instructions printed n the container, conform with the definitions of the corresponding milk products in this section.

F. LOWFAT MILK.--Lowfat milk is the product defined in the *Code of Federal Regulations,* Title 21, Section 131.135.

F-1. Lowfat Dry Milk.--Lowfat dry milk is the product defined in the *Code of Federal Regulations,* Title 21, Section 131.123.

G. NONFAT DRY MILK.-- Nonfat dry milk is the product as defined in the *Code of Federal Regulations,* Title 21, Section 131.125.

G-1. Nonfat Dry Milk Fortified with Vitamins A and D.--Nonfat dry milk fortified with vitamins A&D is the product defined in the *Code of Federal Regulations,* Title 21, Section 131.127.

H. BUTTERMILK.--Buttermilk is a fluid product resulting from the manufacture of butter from milk or cream. It contains not less than 8 1/4 percent of milk solids not fat.

H-1. Dry Buttermilk.--Dry buttermilk is the product defined in the *Code of Federal Regulations,* Title 7, Section 58.2651(a).

H-2. Grade A Dry Buttermilk.-- Grade A dry buttermilk means dry buttermilk which complies with the applicable provisions of this ordinance.

H-3. Dry Buttermilk Product.-- Dry buttermilk product is the product defined in the *Code of Federal Regulations,* Title 7, Section 58.2651(b).

H-4. Grade A Dry Buttermilk Product--Grade A Dry buttermilk product means dry buttermilk product which complies

with the applicable provisions of this ordinance.

H-5. Condensed Buttermilk.-- Condensed buttermilk is the product resulting from the removal of a considerable portion of water from buttermilk.

H-6 Grade A Condensed and Dry Buttermilk.--Grade A condensed and dry buttermilk means condensed or dry whey which complies with the applicable provisions of this *Ordinance*. The words ""condensed and dry milk products" shall be interpreted to included condensed and dry buttermilk.

I. MILK PRODUCTS.--Milk products include cream, light cream, light whipping cream, heavy cream, heavy whipping cream, whipped cream, whipped light cream, sour cream, acidified sour cream, cultured sour cream, half-and-half, sour half-and-half, acidified sour half-and-half, cultured sour half-and-half, reconstituted or recombined milk and milk products, concentrated milk, concentrated milk products, skim milk, lowfat milk, frozen milk concentrate, eggnog, buttermilk, buttermilk products, whey and whey products, cultured milk, cultured lowfat milk, cultured skim milk, yogurt, lowfat yogurt, nonfat yogurt, acidified milk, acidified lowfat milk, acidified skim milk, low-sodium milk, low-sodium lowfat milk, low-sodium skim milk, lactose-reduced milk, lactose-reduced lowfat milk, lactose-reduced skim milk, aseptically processed and packaged milk and milk products as defined in this section, milk, lowfat milk or skim milk with added safe and suitable microbial organisms and any other milk product made by the addition or subtraction of milkfat or addition of safe and suitable optional ingredients for protein, vitamin or mineral fortification of milk products defined herein. Milk products also include those dairy foods made by modifying the federally standardized products listed in this Section in accordance with 21 CFR 130.10 - Requirements for foods named by use of a nutrient content claim and a standardized term.[3]

This definition is not intended to include milk products such as evaporated milk, evaporated skim milk, condensed milk (sweetened or unsweetened), dietary products (except as defined herein), infant formula, ice cream and other desserts, dry milk products (except as defined herein), canned eggnog in a rigid metal container, butter or cheese except when they are combined with other substances to produce any pasteurized or aseptically processed milk or milk product defined herein.

I-1. Pasteurized Milk Products.-- Pasteurized milk products mean commercially prepared Grade A pasteurized milk products regulated by (cite ordinance adopting *Grade A Pasteurized Milk Ordinance--1995 Recommendations of the United Public Health Service/Food and Drug Administration*).

I-2. Dry Milk Products.--Dry milk products mean products resulting from the drying of milk or milk products and any product resulting from the combination of dry milk products with other wholesome dry ingredients.

I-3. Grade A Dry Milk Products.--Grade A dry milk products mean dry milk products which comply with the applicable provisions of this *Ordinance.*

J. WHEY.--Whey is the product defined in the *Code of Federal Regulations,*

Title 21, Section 184.1979. (Note: Also see Title 07, Section 58.2601).

J-1. Reduced Lactose Whey.-- Reduced lactose whey is the product defined in the *Code of Federal Regulations*, Title 21, Section 184.1979a.

J-2. Reduced Minerals Whey.-- Reduced minerals whey is the product defined in the *Code of Federal Regulations*, Title 21, Section 184.1979b.

J-3. Whey Protein Concentrate.-- Whey protein concentrate is the product defined in the *Code of Federal Regulations*, Title 21, Section 184.1979c.

J-4. Whey Products.--Whey products mean any fluid product removed from whey; or made by the removal of any constituent from whey; or by the addition of any wholesome substance to whey or parts thereof.

J-5. Dry Whey.--Dry whey is the product defined in the *Code of Federal Regulations* Title 21 Section 184.1979.

J-6. Dry Whey Products.--Dry whey products mean products resulting from the drying of whey or whey products and any product resulting from the combination of dry whey products with other wholesome dry ingredients.

J-7. Condensed Whey.-- Condensed whey is the product defined in the *Code of Federal Regulations* Title 21 Section 184.1979. For the purposes of this document, condensed whey is an alternate name for concentrated whey.

J-8. Grade A Condensed and Dry Whey.--Grade A condensed and dry whey means condensed or dry whey which complies with the applicable provisions of this *Ordinance*. The words "condensed and dry milk products" shall be interpreted to include condensed and dry whey.

J-9. GRADE A WHEY PRODUCTS.--Grade A whey products are products which have been produced for use in Grade A pasteurized or aseptically processed milk products and which have been manufactured under the provisions of the *Grade A Condensed and Dry Milk Products and Condensed and Dry Whey--Supplement I to the Grade A Pasteurized Milk Ordinance, 1995 Recommendations*.

K. Reserved for future use.

L. ADULTERATED.--Any condensed or dry milk product shall be deemed to be adulterated if one or more of the conditions described in Section 402 of the *Federal Food, Drug, and Cosmetic Act*, as amended, (21 U.S.C.) exist. (See Appendix G, p. 143)

M. MISBRANDED.--Condensed and dry milk products are misbranded if one or more of the conditions described in Section 403 of the *Federal Food, Drug, and Cosmetic Act, as amended*, (21 U.S.C.) exist. (See Appendix G, p. 143)

N. PASTEURIZATION.--The terms "pasteurization", "pasteurized" and similar terms shall mean the process of heating every particle of milk, milk products, whey and whey products, in properly designed and operated equipment, to one of the temperatures given in the following chart, and held continuously at or above that temperature for at least the corresponding specified time:

Temperature	Time
*63ºC (145ºF)	30 minutes
*72ºC (161ºF)	15 seconds
89ºC (191ºF)	1.0 second
90ºC (194ºF)	0.5 second
94ºC (201ºF)	0.1 second
96ºC (204ºF)	0.05 second
100ºC (212ºF)	0.01 second

*if the fat content of the milk product or whey is 10 percent or more, or if it contains added sweeteners, or is condensed milk or condensed milk product, the specified temperature shall be increased by 3ºC (5ºF). *Provided*, that nothing in this definition shall be construed as barring any other pasteurization process which has been recognized by the Food and Drug Administration to be equally effective and which is approved by the State regulatory agency.

O. SANITIZATION.--Sanitization is the application of any effective method or substance to a clean surface for the destruction of pathogens, and of other organisms as far as is practicable. Such treatment shall not adversely affect the equipment, the milk, milk products, whey and condensed and dry milk products or the health of consumers, and shall be acceptable to the regulatory agency.

P. REGULATORY AGENCY.--The regulatory agency shall mean the...of the ...[1] or his authorized representative. The term, "regulatory agency",whenever it appears in this *Ordinance*, shall mean the appropriate agency having jurisdiction and control over the matters embraced within this *Ordinance*.

Q. MILK CONDENSING AND/OR DRYING PLANT.--A milk condensing and/or drying plant is a plant in which milk or milk products are condensed, dried or in which milk or milk products are received, separated or otherwise processed for drying and packaging.

R. WHEY CONDENSING AND/OR DRYING PLANT.--A whey condensing and/or drying plant is a plant in which whey is condensed, dried or in which whey is received and processed for drying and packaging.

S. OFFICIAL LABORATORY.--An official laboratory is a biological, chemical or physical laboratory which is under the direct supervision of the State or a local regulatory agency.

T. OFFICIALLY DESIGNATED LABORATORY.--An officially designated laboratory is a commercial laboratory authorized to do official work by the regulatory agency, or a milk industry laboratory officially designated by the regulatory agency for the examination of producer samples of Grade A raw milk for pasteurization and commingled milk tank

truck samples of raw milk for drug residues and bacterial limits.

U. PERSON.--The word "person" shall include any individual, plant operator, partnership, corporation, company, firm, trustee, association or institution.

V. AND/OR.--Where the term "and/or" is used, "and" shall apply where appropriate, otherwise "or" shall apply.

W. MILK TRANSPORT TANK.--A milk transport tank is a vehicle, including the truck and tank, used by a milk hauler to transport bulk shipments of milk, milk products, whey, whey products, condensed whey, or condensed milk products from sources of supply to a whey/milk condensing and/or drying plant.

X. MILK TANK TRUCK.--A milk tank truck is the term used to describe both a bulk milk pickup tanker and a milk transport tank.

Y. Bulk Milk Pickup Tanker.--A bulk milk pickup tanker is a vehicle, including the truck, tank and those appurtenances necessary for its use, used by a milk hauler to transport bulk shipments of milk from a milk plant, receiving station or transfer station as defined in the *Grade A Pasteurized Milk Ordinance-1995 Recommendations of the United States Public Health Service/Food and Drug Administration.*

Z. Drug.--The term drug means (A) articles recognized in the official United States Pharmacopeia, official Homeopathic Pharmacopeia of the United States or official National Formulary or any supplement to any of them; and (B) articles intended for use in the diagnosis, cure, mitigation, treatment or prevention of disease in man or other animals; and (C) articles (other than food) intended to affect the structure or any function of the body of man or other animals; and (D) articles intended for use as a component of any articles specified in clause (A), (B), or (C), but does not include devices or their components, parts or accessories.

SECTION 2.
ADULTERATED OR MISBRANDED MILK AND MILK PRODUCTS

No person shall, within the...of ...[1] or its jurisdiction, produce, provide, sell, offer, or expose for sale, or have in possession with intent to sell any condensed and dry milk products intended for use in the commercial preparation of Grade A pasteurized milk products which are adulterated or misbranded. *Provided,* that in an emergency, the sale of condensed and dry milk products which have not been graded, or the grade of which is unknown, may be authorized by the regulatory agency in which case such products shall be labeled "ungraded".

Any adulterated or misbranded milk, milk products, whey and condensed or dry milk products may be impounded by the regulatory agency and disposed of in accordance with applicable laws or regulations.

ADMINISTRATIVE PROCEDURES

This section of the *Ordinance* shall be used in impounding the products of, or preferring charges against, persons who adulterate or misbrand their condensed and dry milk products or label them with any grade designation not authorized by the regulatory agency under the terms of this

Ordinance, or who sell or deliver ungraded condensed and dry milk products for the commercial preparation of Grade A pasteurized milk products, *except* as may be permitted under this section in an emergency. An emergency is defined as a general and acute shortage in the milk shed, not simply one distributor's shortage.

SECTION 3. PERMITS

It shall be unlawful for any person who does not possess a permit from the regulatory agency of the...of ...[1] to manufacture, bring into, send into, or receive into the...of ...[1] or its jurisdiction, for sale, or to sell, or offer for sale therein, or to have in storage any condensed and dry milk products for use in the commercial preparation of Grade A pasteurized milk products. *Provided*, that brokers, agents, and distributors representing, buying from, and/or selling condensed and dry milk products from or to a plant having a valid permit are not required to have a permit.

Only a person who complies with the requirements of this *Ordinance* shall be entitled to receive and retain such a permit. Permits shall not be transferable with respect to persons and/or locations. *Provided*, that the manufacture of condensed and dry milk products which do not meet the requirements of this *Ordinance* for Grade A condensed or dry milk products or Grade A condensed or dry whey and which are intended for other uses, shall not be construed to violate the terms of this *Ordinance*, if such products are processed, packaged and stored separately and are plainly identified.

It shall be unlawful for any person to manufacture in a plant under a permit for Grade A condensed or dry milk products or Grade A condensed or dry whey in the...of...[1] or its jurisdiction any condensed and dry milk products which do not meet the requirements of this *Ordinance* for Grade A condensed or dry milk products or Grade A condensed or dry whey without a permit from the regulatory authority who shall require that such condensed and dry milk products be processed, packaged and stored separately from Grade A condensed or dry milk products or Grade A condensed or dry whey and that each container of such products be plainly marked in such manner as to prevent confusion of the product with Grade A condensed or dry milk products or Grade A condensed or dry whey.

A permit for the manufacture of Grade A condensed and dry milk products and Grade A condensed and dry whey or condensed and dry milk products which do not meet the requirements of this *Ordinance* for Grade A condensed or dry milk products or Grade A condensed or dry whey shall be suspended by the regulatory agency whenever it has reason to believe a public health hazard exists; or whenever the permit holder has violated any of the applicable requirements of this *Ordinance*; or whenever the permit holder has interfered with the regulatory agency in performance of its duties. *Provided*, that the regulatory agency shall in all cases except where the milk, milk product, whey, or condensed and dry milk products involved creates, or appears to create, an imminent hazard to public health; or in case of a willful refusal to permit authorized inspection, serve upon the holder a written notice of intent to suspend permit, which notice shall specify with particularity the violation(s) in question and afford the holder such reasonable opportunity to correct each violation(s) as may be agreed to by the parties, or in the absence of agreement, fixed by the regulatory agency, before making any order of suspension

effective. A suspension of permit shall remain in effect until the violation(s) have been corrected to the satisfaction of the regulatory agency.

Upon notification, acceptable to the regulatory agency, by any person whose permit has been suspended, or upon application within 48 hours of any person who has been served with a notice of intention to suspend, and in the latter case before suspension, the regulatory agency shall within 72 hours proceed to a hearing to ascertain the facts of such violation(s) or interference and upon evidence presented at such hearing shall affirm, modify or rescind the suspension or intention to suspend.

Upon repeated violation(s), the regulatory agency may revoke such permit following reasonable notice to the permit holder and an opportunity for a hearing. This section is not intended to preclude the institution of court action as provided in Sections 5 and 6.

ADMINISTRATIVE PROCEDURES

Issuance of Permits.--Every condensing and/or drying plant operator shall hold a valid permit.

While compliance with the requirements for Grade A condensed and dry milk products and Grade A condensed and dry whey is necessary to receive and retain a permit for these products, it is not the intent of this *Ordinance* to limit the production of a condensing or drying plant to Grade A products.

The manufacture of ungraded products for other uses in plants operating under a permit for the manufacture of Grade A dry milk products or Grade A dry whey is permitted under conditions whereby such products are processed, packaged, and stored separately. In such cases, a second permit is required which is issued with the understanding that ungraded products will be handled in such a manner so as to avoid confusion with the Grade A production.

Either or both permits may be temporarily suspended for the violation of any applicable provision of this *Ordinance*, or revoked for a serious or repeated violation. Suspension of permits for violation of sanitation items of Section 7 is provided for in Section 5. In addition, the regulatory agency may, at any time, institute court action under the provisions of Section 6.

There is no specific frequency for the issuance of permits. This should be in accordance with the policies of the enforcement agency and in agreement with those employed for the issuance of permits under the (cite ordinance adopting *Grade A Pasteurized Milk Ordinance--1995 Recommendations of the United States Public Health Service/Food and Drug Administration* to which this *Ordinance* is a supplement.)

The manufacture of ungraded products for other uses in plants operating under a permit for the manufacture of Grade A condensed or dry milk products or Grade A condensed or dry whey is permitted under conditions specified in Section 7 of this *Ordinance*.

Suspension of Permit.--When any requirement(s) of this *Ordinance* is violated, the permit holder is subject to the suspension of this permit.

The regulatory agency may forego suspension of the permit, provided the product or products in violation are not sold or offered for sale.

Hearings.--If a State or municipal administrative procedure act which provides procedures for administrative hearings and judicial review of administrative

determinations is available, the act shall be made applicable by reference to the hearings provided for in the *Ordinance*. If such administrative procedure act is not available, appropriate procedures, including provision for notice, hearing officer, and his authority, record of hearing, rules or evidence, and court review shall be established by the appropriate authority.

Reinstatement of Permits.--Any permit holder whose permit has been suspended may make written application for the reinstatement of his permit.

When the permit suspension has been due to a violation of any of the bacterial, coliform, or cooling-temperature standards, the regulatory agency, within one week after receipt of such notification for reinstatement of permit, shall issue a temporary permit after determining, by an inspection of the facilities and operating methods, that the conditions responsible for the violation have been corrected. Samples shall then be taken at the rate of not more than two per week on separate days until such time as the last individual sample complies with the standard. The regulatory agency shall then reinstate the permit.

Whenever the permit suspension has been due to a violation of a requirement other than the bacteriological, coliform or cooling-temperature standards, the notification shall indicate that the violation(s) has been corrected. Within one week of the receipt of such notification, the regulatory agency shall make an inspection of the applicant's establishment and as many additional inspections thereafter, as are deemed necessary, to determine that the applicant is complying with the requirements. When the findings justify, the permit shall be reinstated.

SECTION 4. LABELING

All containers and packages enclosing condensed and dry milk products defined in Section 1 of this *Ordinance* shall be labeled in accordance with the applicable requirements of the *Federal Food, Drug, and Cosmetic Act as amended, The National Labeling and Education Act of 1990*, and regulations developed thereunder, and in addition shall be conspicuously and permanently labeled or marked with:

1. The name of the contents as given in the definitions of this *Ordinance* if used, and the common name of the ingredients;
2. The words "Grade A";
3. The identity of the plant in which the product was manufactured or processed by either name and address or by permit number and identity of the regulatory agency issuing such permit; and in the latter case, the name and address of the distributor shall be shown by a statement, such as "Distributed by.."; and
4. A code or lot number identifying the contents with a specific date, run, or batch of the product, and the quantity of the contents of the container.
5. The word "Goat" or "Sheep" shall precede the name of the milk or milk product when the product is or is made from goat or sheep milk respectively.

Required labeling information shall be in letters of an acceptable size, kind and color satisfactory to the regulatory agency and shall contain no marks or words which are misleading. Other information, such as a registered trademark design, which is not misleading and does not obscure any of the labeling requirements above may also be included.

Milk tank trucks transporting milk, whey, condensed whey or condensed milk products to a drying plant from another milk plant, receiving or transfer station are required to be marked with the name and address of the milk plant or hauler and shall be sealed; in addition, for each such shipment, a shipping statement shall be prepared containing at least the following information:

1. Shipper's name, address, and permit number.
2. Permit identification of hauler, if not employee of shipper.
3. Point of origin of shipment.
4. Tanker identity number.
5. Name of product.
6. Weight of product.
7. Grade of product.
8. Temperature of product when applicable.
9. Date of shipment.
10. Name of supervising regulatory agency at the point of origin.
11. Whether the contents are raw, pasteurized, or in the case of cream, lowfat or skim milk, whether it has been heat- treated.
12. Seal number on inlet and outlet.

One copy of the shipping statement shall be retained by the consignor, one by the common carrier and at least two copies shall be delivered to the consignee with the shipment. The consignee shall forward at least one copy to the local regulatory agency or State authority in the receiving area. Upon request, the regulatory agency or State authority shall return to the official supervising agency the following information:

1. Date and time of arrival of product.
2. Temperature of product.
3. Bacterial count and butterfat test of product on individual shipment.
4. Adequacy of seals.
5. Other pertinent information.

Entries made on shipping statements by consignors or consignees shall be legible. When the interstate shipment is derived from more than one point of origin, separate shipping statements for each of the sources involved shall accompany the shipment. Shipping statements shall be retained on file for a period of at least 6 months.

Each bulk milk pickup tanker load of milk shall be accompanied by documentation (weight ticket or manifest) which shall include the IMS BTU Identification Number(s) of the IMS Listed Plant Number (for farm groups listed with a plant).

ADMINISTRATIVE PROCEDURES

The purpose of this section is to require labeling that will permit easy identification of the condensed and dry milk product and its origin. It is required that a product be designated by its common or usual name. The *Ordinance* permits the preparation of special use products containing other wholesome ingredients and this section requires that the name of each ingredient be declared on the label.

Identity Labeling.--"Identity" as used in this section, is defined as the name and address of the processing plant, at which the pasteurization, drying and/or condensing takes place. It is recommended that the voluntary national uniform coding system for the identification of pasteurization plants at which condensed and dry milk products are packaged, be adopted in order to provide a uniform system of codes throughout the country.

In cases where several plants are operated by one firm, the common firm name may be utilized on containers and packages. *Provided*, that the location of the plant at which the contents were pasteurized, ultra-pasteurized , or aseptically processed is also shown, either directly or by a code. This requirement is necessary in order to enable the regulatory agency to identify the source of the condensed and dry milk products. The street address of the plant need not be shown when only one plant of a given name is located within the municipality.

The identity labeling requirement may be interpreted as permitting plants and persons to purchase and distribute, under their own label, condensed and dry milk products, processed and packaged at another plant, provided that the label reads, "Processed at ...(name and address)", or that the processing and packaging plant is identified by a proper code.

Misleading Labels.--The regulatory agency shall not permit the use of any misleading marks, words or endorsements upon the label. The outer bag must be pre-printed "Grade A" before filling. This section permits the use of registered trademark designs or similar terms when, in the opinion of the regulatory agency, such designs or terms are not misleading and not used so as to obscure the labeling required by this *Ordinance*. The use of super grade designations such as "Grade AA", "Selected Grade A", "Special Grade A", etc., are not permitted. However, this should not be construed as prohibiting the use of official grade designations awarded to dry milk products by the United States Department of Agriculture.

SECTION 5.
INSPECTION OF CONDENSING AND/OR DRYING PLANTS

Each condensing and/or drying plant(s) whose products are intended for use in the commercial preparation of Grade A pasteurized milk products within...of...[1] or its jurisdiction, shall be inspected by the regulatory agency prior to the issuance of a permit. Following the issuance of a permit, each condensing and/or drying plant shall be inspected at least once every three months. Should the violation of any requirement set forth in Section 7 be found to exist on an inspection, a second inspection shall be required after the time deemed necessary to remedy the violation, but not before three days; this second inspection shall be used to determine compliance with the requirements of Section 7. Any violation of the same requirement of Section 7 on such second inspection shall call for permit suspension in accordance with Section 3 and/or court action. *Provided*, that when the regulatory agency finds that a critical processing element violation involving:

1. Proper pasteurization, whereby every particle of milk or milk product, whey or whey product may not have been heated to the proper temperature and held for the required time in properly designed and operated equipment; or
2. A cross-connection exists whereby direct contamination of pasteurized milk, milk product, whey or whey product is occurring; or
3. Conditions exist whereby direct contamination of pasteurized milk, milk product, whey, or whey product is occurring.

The regulatory agency shall take immediate action to prevent further processing of such milk, milk product, whey or whey

product until such violations of critical processing element(s) have been corrected. Should correction of such critical processing element(s) not be accomplished immediately, the regulatory agency shall take prompt action to suspend the permit as provided for in Section 3 of this *Ordinance.* One copy of the inspection report shall be handed to the operator, or other responsible person or be posted in a conspicuous place on an inside wall of the establishment. Said inspection report shall not be defaced and shall be made available to the regulatory agency upon request. An identical copy of the inspection report shall be filed with the records of the regulatory agency.

The regulatory agency shall also make such other inspections and investigations as are necessary for the enforcement of this *Ordinance*.

Every permit holder shall, upon request of the regulatory agency, permit at any reasonable time access of officially designated persons to all parts of the establishment or facilities to determine compliance with the provisions of this *Ordinance*. A distributor or plant operator shall furnish the regulatory agency, upon request, for official use only, a true statement of the actual quantities of milk, milk products, and condensed and dry milk products of each grade purchased and sold, and a list of all sources of such products, records of inspections, tests, and pasteurization time and temperature records.

It shall be unlawful for any person who in an official capacity obtains any information under the provisions of this *Ordinance* which is entitled to protection as a trade secret (including information as to quantity, quality, source or disposition of milk, milk products, and condensed and dry milk products, or results of inspections or tests thereof) to use such information to his own advantage or to reveal it to any unauthorized person.

ADMINISTRATIVE PROCEDURES

Inspection Frequency.--For the purposes of determining the inspection frequency for milk plants and receiving stations the interval shall include the designated six month period plus the remaining days of the month in which the inspection is due. One inspection of each condensing or drying plant every three months is not a desirable frequency; it is instead a legal minimum. Condensing and/or drying plants experiencing difficulty meeting requirements should be visited more frequently. Condensing and/or drying plants which operate for a short duration of time or intermittent periods of time should also be inspected more frequently. Inspections of condensing and/or drying plants shall be made as often as possible and at different times of the day, in order to ascertain if the processes of equipment assembly, sanitizing, pasteurization, cleaning and other procedures comply with the requirements of this *Ordinance*. All condensed and dry milk products manufactured beyond the limits of routine inspection shall be received in accordance with the requirements of Section 8.

Enforcement Procedure.--This section provides that a condensing and/or drying plant shall be subject to suspension of permit, and/or court action, if two successive inspections disclose violation of the same requirement.

Experience has demonstrated that strict enforcement of the *Ordinance* leads to a better relationship between the regulatory agency and the milk industry than does a policy of enforcement which seeks to excuse

violations and to defer penalty therefor. The sanitarian's criteria of satisfactory compliance should be neither too lenient nor unreasonably stringent. When a violation is discovered, the sanitarian should point out to the plant operator the requirement that has been violated, discuss a method for correction, and set a time for correcting the violated requirement.

The penalties of suspension or revocation of permit, and/or court action, are provided to prevent continued violation of the provisions of this *Ordinance* but are worded to protect the dairy industry against unreasonable or arbitrary action. When a condition is found which constitutes an imminent health hazard, prompt action is necessary to protect the public health; therefore, the regulatory agency is authorized, in Section 3, to suspend the permit immediately. However, except for such emergencies, no penalty is imposed on the plant operator upon the first violation of any of the sanitation requirements listed in Section 7. A plant operator found violating any requirement must be notified in writing and given a reasonable time to correct the violation(s) before a second inspection is made. The requirement of giving written notice shall be deemed to have been satisfied by the handing to the operator or by the posting of an inspection report, as required by this section. After receipt of a notice of violation, but before the allotted time has elapsed, the plant operator shall have an opportunity to appeal the sanitarian's interpretation to the regulatory agency or for an extension of the time allowed for correction.

Inspection Reports.--A copy of the inspection report shall be filed by the regulatory agency and retained for at least 12 months. The results shall be entered on appropriate ledger forms. The use of a computer or other information retrieval system may be used.

SECTION 6.
THE EXAMINATION OF MILK AND MILK PRODUCTS

It shall be the responsibility of the milk hauler to collect a representative sample of milk from each farm bulk tank prior to transferring milk from a farm bulk tank, truck or other container. All samples shall be collected and delivered to a milk plant, receiving station, transfer station or other location approved by the regulatory agency.

During any consecutive six months, at least four samples of raw milk for pasteurization shall be collected, in at least four separate months, except when three months show a month containing two sampling dates separated by at least 20 days, and delivered in accordance with this section from each producer. These samples shall be obtained under the direction of the regulatory agency or shall be taken from each producer under the direction of the regulatory agency.

During any consecutive six months, at least four samples of raw milk for pasteurization, collected in at least four separate months, except when three months show a month containing two sampling dates separated by at least 20 days, shall be collected by the regulatory agency, from each milk plant after receipt of the milk by the plant and prior to pasteurization.

During any consecutive six months, at least four samples of heat-treated milk products, from plants offering such products for sale, shall be collected in at least four separate months by the regulatory agency.

During any consecutive six months, at least four samples of each Grade A dry milk

product, four samples of each Grade A condensed and Grade A dry whey product being manufactured and defined in this *Ordinance*, shall be collected in at least four separate months, except when three months show a month containing two sampling dates separated by at least 20 days, from every milk plant, by the regulatory agency.

If production of any Grade A product as defined in this *Ordinance* is not on a yearly basis, at least 5 samples shall be taken within a continuous production period.

Required bacterial counts, somatic cell counts and cooling temperature checks shall be performed on raw milk for pasteurization. In addition, drug tests on each producer's milk shall be conducted at least four times during any consecutive 6 months. Required bacterial counts, drug tests, coliform determinations, phosphatase and cooling temperature checks shall be performed on Grade A pasteurized products defined in this *Ordinance*.

Whenever two of the last four consecutive bacterial counts, somatic cell count, coliform determinations, or cooling temperatures, taken on separate days, exceed the limit of the standard for the products as defined in this *Ordinance*, the regulatory agency shall send a written notice thereof to the person concerned. This notice shall be in effect so long as two of the last four consecutive samples exceed the limit of the standard. An additional sample shall be taken within 21 days of the sending of such notice, but not before the lapse of 3 days. Immediate suspension of permit, in accordance with Section 3, and/or court action shall be instituted whenever the standard is violated by three of the last five bacterial counts, coliform determinations, cooling temperatures or somatic cell counts.

Whenever a phosphatase test is positive, the cause shall be determined. Where the cause is improper pasteurization, it shall be corrected and any milk or milk product involved shall not be offered for sale.

Whenever a pesticide residue test is positive, an investigation shall be made to determine the cause and the cause shall be corrected. An additional sample shall be taken and tested for pesticide residues and no products as defined in this *Ordinance* shall be offered for sale until it is shown by a subsequent sample to be free of pesticide residues or below the actionable levels established for such residues.

Whenever a drug residue test is positive, an investigation shall be made to determine the cause, and the cause shall be corrected in accordance with the provisions of Appendix N, page 197.

Samples shall be analyzed at an official or appropriate officially designated laboratory. All sampling procedures and required laboratory examinations shall be in substantial compliance with the ... Edition of *Standard Methods for the Examination of Dairy Products* of the American Public Health Association, and the ... Edition of *Official Methods of Analysis of the Association of Official Analytical Chemists*. (Insert edition number current at time of adoption.) Such procedures, including the certification of sample collectors and examinations shall be evaluated in accordance with the *Evaluation of Milk Laboratories, United States Public Health Service/Food and Drug Administration*. Other examinations and tests shall be conducted to determine compliance with the applicable provisions of this *Ordinance*, as the regulatory agency shall require, in a laboratory acceptable to the regulatory agency. Examinations and tests to detect adulterants, including pesticides, shall

be conducted as the regulatory agency requires. Assays of products as defined in this *Ordinance*, to which vitamin(s) A and/or D have been added, shall be made at least annually in a laboratory which has been certified by the U. S. Food and Drug Administration and which is acceptable to the regulatory agency.

In addition, all facilities fortifying products with vitamins must keep volume control records. These volume control records must cross reference the form and amount of vitamin D, vitamin A and/or vitamin A & D used with the amount of products produced and indicate a percent of expected use, plus or minus.

ADMINISTRATIVE PROCEDURES

ENFORCEMENT PROCEDURES.--All violations of bacteria, coliform and cooling temperature standards should be followed promptly by inspection to determine and correct the cause. (See Appendix E, PMO, Examples of 3-out-of-5 Compliance Enforcement Procedures).

LABORATORY TECHNIQUES.--Procedures for the collection and holding of samples; the selection and preparation of apparatus, media and reagents; and the analytical procedures, incubation, reading and reporting of results, shall be in substantial compliance with *Standard Methods for the Examination of Dairy Products and the Official Methods of Analysis*. The procedures shall be those specified therein for:

1. Standard plate count at 32ºC (agar or petrifilm method).
2. Alternate methods, including Plate Loop Count with petrifilm, for viable counts for raw milk, and the petrifilm method, for pasteurized milk and milk products, at 32ºC.
3. Coliform test with solid media or petrifilm method at 32ºC for all milk and milk products, and Petrifilm High Sensitivity Coliform count method for all milk and milk products except unflavored whole, low fat and skim milk.
4. A viable bacterial count of nonfat dry milk and dry whey shall be made in accordance with the procedures in *Standard Methods for the Examination of Dairy Products* for the Standard Plate Count of Dry Milk, except agar plates shall be incubated for 72 hours.
5. Beta lactam methods which have been independently evaluated or evaluated by FDA and have been found acceptable by FDA for detecting drug residues at current safe or tolerance levels shall be used for each drug of concern.

Regulatory action shall be taken on all positive results (see Appendix N, P. 197). A result shall be considered positive if it has been obtained by using a method which has been evaluated and deemed acceptable by FDA at levels established in memoranda transmitted periodically by FDA as required by Section III of Appendix N.

6. Screening and confirmatory methods for the detection of abnormal milk.
7. APHA or AOAC phosphatase tests.
8. Any other tests which have been approved by the Food and Drug Administration to be equally accurate, precise and practical.
9. All standards used in the development and use of drug residue detection methods designed for PMO monitoring programs will be referenced to a United States Pharmacopeia (USP) standard when available.

When a USP standard is not available, then the original method must define the standard to be used.

10. Procedural or reagent changes for official tests must be submitted to the Food and Drug Administration for acceptance prior to being used by certified NCIMS milk laboratories.

The phosphatase test is an index of the efficiency of the pasteurization process. In the event the laboratory phosphatase test is positive, the cause shall be determined immediately. Where the cause is improper pasteurization, it shall be corrected. When a laboratory phosphatase test is positive, or if any doubt should arise as to the compliance of the equipment, standards or methods outlined in Section 7., Item 16p., the regulatory agency should immediately conduct field phosphatase test at the plant (Appendix K, P. 181).

SAMPLING PROCEDURES.-- When samples of raw milk for pasteurization are taken at a milk plant prior to pasteurization, they shall be drawn following adequate agitation from randomly selected storage tanks.

When bacterial counts, except for aseptically processed milk and milk products, and temperature determinations are made of several samples of the same milk or milk products collected from the same supply or processor, on the same day, these values are averaged arithmetically and the results recorded as the count or temperature determinations of the milk or milk product for that day. All counts and temperatures should be recorded on a milk-ledger form for milk plants as soon as reported by the laboratory.

A computer or other information retrieval system may be used.

See Appendix K, page 181, for a reference to drug residues in milk and the conditions under which a positive phosphatase reaction may be encountered in properly pasteurized milk or cream.

SECTION 7. STANDARDS FOR MILK, MILK PRODUCTS AND CONDENSED AND DRY MILK PRODUCTS

Grade A raw milk for pasteurization, Grade A raw milk products, Grade A condensed milk, Grade A dry milk products, Grade A condensed whey and Grade A dry whey shall be processed, pasteurized, and manufactured to conform with the following chemical, physical, bacteriological, and temperature standards, and the sanitation requirements of this section.

No process or manipulation other than pasteurization, processing methods integral therewith, and appropriate refrigeration shall be applied to milk, milk products or whey for the purpose of removing or deactivating microorganisms. *Provided*, that in the bulk shipment of cream, skim milk, or lowfat milk, the heating of the raw milk, one time, to temperatures greater than 52ºC (125ºF), but less than 72ºC (161ºF), for separation purposes is permitted when resulting bulk shipments of cream, skim milk, or lowfat milk are labeled heat treated. In the case of heat treated cream the cream may be further heated to less than 75ºC (166ºF) in a continuing heating process and immediately cooled to 7ºC (45ºF) or less when necessary for enzyme deactivation (such as lipase reduction) for a functional reason.

Milk and milk products used in the manufacture of Grade A condensed and dry milk products shall comply with the requirements for Grade A raw milk for

pasteurization as provided in (cite ordinance adopting the *Grade A Pasteurized Milk Ordinance--1995 Recommendations of the United States Public Health Service/Food and Drug Administration*) and shall be produced under the routine supervision of the regulatory agency, or produced under provisions which are substantially equivalent to the requirements of said ordinance, and which are enforced with equal effectiveness as determined by a milk sanitation rating.

Whey shall be from cheese made from Grade A raw milk for pasteurization provided in (cite ordinance adopting the *Grade A Pasteurized Milk Ordinance--1995 Recommendations of the United States Public Health Service/Food and Drug Administration*.

Whey used in the manufacture of Grade A condensed and dry whey shall be produced in a cheese plant that complies with Items 1p, 2p, 3p, 4p, 5p including the requirements in Footnote g, 6p, 7p including the requirements in Footnote h, 8p, 9p, 10p, 11p, 12p, 13p, 14p, 15p, 17p, 20p, 21p and 22p as provided in (cite ordinance adopting the *Grade A Pasteurized Milk Ordinance--1995 Recommendations of the United States Public Health Service/ Food and Drug Administration*).

Whey shall be from:

1. Cheese made from Grade A raw milk for pasteurization which has been pasteurized prior to use in accordance with Item 16p of the *Grade A Pasteurized Milk Ordinance--1995 Recommendations of the United States Public Health Service/Food and Drug Administration*, or

2. Cheese made from Grade A raw milk for pasteurization, which has been heat-treated to a temperature of at least 64ºC (147ºF) and held continuously at that temperature for at least 21 seconds or to at least 68ºC (153ºF) and held continuously at that temperature for at least 15 seconds, in equipment meeting the pasteurization requirements provided in (cite ordinance adopting the *Grade A Pasteurized Milk Ordinance--1995 Recommendations of the United States Public Health Service/Food and Drug Administration*). *Provided*, that this requirement shall not be construed as barring any other heat treatment process which has been recognized by the United States Public Health Service/Food and Drug Administration to be equally efficient in the destruction of staphylococcal organisms and which is approved by the State regulatory agency.

Buttermilk shall be from butter made from Grade A cream which has been pasteurized prior to use in accordance with Item 16p of the *Grade A Pasteurized Milk Ordinance--1995 Recommendations of the United States Public Health Service/Food and Drug Administration*. (NOTE: See the *Code of Federal Regulations*, Title 7, Section 58.334 for time and temperature requirements for the pasteurization of cream for butter making). *Provided*, that this requirement shall not be construed as barring any other heat treatment process which has been recognized by the United States Public Health Service/Food and Drug Administration to be equally efficient in the destruction of staphylococcal organisms and which is approved by the State regulatory agency.

TABLE 1. Chemical, Physical, Bacteriological and Temperature Standards		
GRADE A RAW MILK FOR PASTEURIZATION	Temperature	Cooled to 7ºC (45ºF) or less within two hours after milking. *Provided*, that the blend temperature after the first and subsequent milkings does not exceed 10ºC (50ºF).
	Bacterial limits	Not to exceed 300,000 per ml as commingled milk prior to pasteurization.
	Drugs	No positive results on drug residue detection methods as referenced in Section 6 - Laboratory Techniques.
GRADE A PASTEURIZED MILK AND MILK PRODUCTS AND BULK SHIPPED HEAT-TREATED MILK PRODUCTS	Temperature	Cooled to 7ºC (45ºF) or less and maintained thereat.
	Bacterial limits*	20,000 per ml.
	Coliform**	Not to exceed 10 per ml. *Provided*, that in the case of bulk milk transport tank shipments, shall not exceed 100 per ml.
	Phosphatase**	Less than 1 microgram per ml by the Scharer Rapid Method (less than 500 milliunits/L by Fluorometric Procedure) or equivalent.
	Drugs	No positive results on drug residue detection methods as referenced in Section 6 - Laboratory Techniques which have been found to be acceptable for use with pasteurized milk and milk products and heat-treated milk products.
GRADE A PASTEURIZED CONDENSED MILK AND CONDENSED SKIM MILK	Temperature	Cooled to 7ºC (45ºF) or less and maintained thereat unless drying is commenced immediately after condensing.
	Bacterial limits	Not to exceed 30,000 per gram.
	Coliform	Not to exceed 10 per gram. *Provided*, that in the case of bulk milk transport tank shipments shall not exceed 100 per ml.
	Phosphatase	Less than 1 microgram per ml by Sharer Rapid Method or equivalent.
	Drugs	No positive results on drug residue detection methods as referenced in Section 6 - Laboratory Techniques which have been found to be acceptable for use with condensed milk and condensed skim milk.

GRADE A NONFAT DRY MILK	No More than: Butterfat Moisture Titratable acidity Solubility index Bacterial estimate Coliform Scorched particles disc B Drugs	 1.25% 4.00% 0.15% 1.25ml. 30,000 per gram. 10 per gram. 15.0 per gram. No positive results on drug residue detection methods as referenced in Section 6 - Laboratory Techniques which have been found to be acceptable for use with dry milk.
GRADE A WHEY FOR CONDENSING	Temperature Drugs	Maintained at a temperature of 45ºF (7ºC) or less, or 63ºC (145ºF) or greater, except for acid-type whey with a titratable acidity of 0.40% or above, or a pH of 4.6 or below. No positive results on drug residue detection methods as referenced in Section 6 - Laboratory Techniques which have been found to be acceptable for use with whey.
GRADE A PASTEURIZED CONDENSED WHEY	Temperature Bacterial limit Coliform limit Phosphatase Drugs	Cooled to 7ºC (45ºF) or less during crystallization, within 18 hours of condensing. Not to exceed 30,000 per gram. Not to exceed 10 per gram. Less than 1 microgram per ml by Sharer Rapid Method or equivalent. No positive results on drug residue detection methods as referenced in Section 6 - Laboratory Techniques which have been found to be acceptable for use with condensed whey.
GRADE A DRY WHEY, GRADE A DRY WHEY PRODUCTS, GRADE A DRY BUTTERMILK, AND GRADE A DRY BUTTERMILK PRODUCTS	Bacterial limit Coliform limit Drugs	Not to exceed 30,000 per gram. Not to exceed 10 per gram. No positive results on drug residue detection methods as referenced in Section 6 - Laboratory Techniques which have been found to be acceptable for use with dry whey, dry whey products, dry buttermilk and dry buttermilk procducts.

* Not applicable to cultured products.

** Not applicable to bulk shipped heat-treated milk products

SANITATION REQUIREMENTS FOR GRADE A CONDENSED MILK AND DRY MILK PRODUCTS AND CONDENSED AND DRY WHEY

All condensing and/or drying plants shall comply with all items of this section.

Facilities for the cleaning and sanitizing of milk tank trucks shall comply with Items 1p, 4p, 6p, 7p, 8p, 9p, 10p, 11p, 12p, 14p, 15p, 20p, and 22p; and as climatic and operating conditions require, the applicable provisions of Items 2p and 3p. *Provided*, that in every case, overhead protection shall be provided.

ITEM 1p. FLOORS--CONSTRUCTION

The floors of all rooms in which milk, milk products, whey, and condensed and dry milk products are processed, handled, packaged or stored, or in which containers, equipment, and utensils are washed, shall be constructed of concrete or other equally impervious and easily cleaned material; and shall be smooth, properly sloped, provided with trapped drains, and kept in good repair. *Provided*, that cold-storage rooms used for storing milk, milk products and whey need not be provided with floor drains when the floors are sloped to drain to one or more exits. *Provided further*, that storage rooms for storing dry ingredients, packaged dry ingredients and/or packaged dry milk products, dry whey products and/or packaging materials need not be provided with drains; and the floors may be constructed of tightly joined wood.

Public-Health Reason.--Floors constructed of concrete or other similarly impervious material can be kept clean more easily than floors constructed of wood or other pervious or easily disintegrating material. They will not absorb organic matter and are; therefore, more apt to be kept clean and free of odors. Properly sloped floors facilitate flushing and help to avoid undesirable conditions. Trapping of drains prevents sewer gas from entering the plant.

ADMINISTRATIVE PROCEDURES

This item is deemed to be satisfied when:

1. The floors of all rooms in which milk, milk products, whey, whey products and condensed and dry milk products are processed, handled, packaged or stored or in which containers or utensils are washed, are constructed of good quality concrete; or equally impervious tile or brick laid closely with impervious joint material; or metal surfacing with impervious joints; or other material which is the equivalent of good quality concrete. The floors of storage rooms for dry ingredients and/or packaging material may be constructed of tightly joined wood.

2. The floor surface is smooth and sloped, so that there are no pools of standing water after flushing; and the joints between the floor and the walls are impervious.

3. The floors are provided with trapped drains. Cold-storage rooms used for storing milk, milk products, whey and whey products need not be provided with floor drains when the floors are sloped to drain to one or more exits. Storage rooms for dry ingredients, dry packaged products and/or packaging materials need not be provided with drains.

Note.--See Item 11p for requirements for floors of drying chambers.

ITEM 2p. WALLS AND CEILINGS--CONSTRUCTION

Walls and ceilings of rooms in which milk, milk products, whey, and condensed and dry milk products are handled, processed, packaged or stored, or in which containers, utensils, and equipment are washed, shall have a smooth, washable, light-colored surface, in good repair.

Public-Health Reason.--Painted or otherwise properly finished walls and ceilings are more easily kept clean and are; therefore, more apt to be kept clean. A light-colored paint or finish aids in the even distribution of light and the detection of unclean conditions.

ADMINISTRATIVE PROCEDURES

This item is deemed to be satisfied when:

1. Walls and ceilings are finished with smooth, washable, light-colored painted wood, tile, smooth surface concrete, cement plaster, brick or other equivalent materials with washable, light-colored surfaces.

2. Walls, partitions, windows and ceilings are kept in good repair and refinished as often as the finish wears off or becomes discolored.

Note.--See Item 11p for requirements for walls for drying chambers. Storage rooms used for the storage of packaged dry milk products or dry whey products are exempt from the ceiling requirements of this item.

ITEM 3p. DOORS AND WINDOWS

Effective means shall be provided to prevent the access of flies and rodents. All openings to the outside shall have solid doors or glazed windows which shall be closed during dusty weather.

Public-Health Reason.--Freedom from flies in the plant reduces the likelihood of contamination of the product. The organisms of typhoid fever, dysentery, and gastrointestinal disorders may be present in the body wastes of persons who have these diseases. In the case of typhoid fever, well persons (carriers) also may discharge the organisms in their body wastes.

ADMINISTRATIVE PROCEDURES

This item is deemed to be satisfied when: 1. All openings to the outer air are effectively protected by:

a. Screening; or

b. Effective electric screen panels; or

c. Fans or air curtains which provide sufficient air velocity so as to prevent the entrance of flies; or

d. Properly constructed flaps where it is impractical to use self-closing doors or air curtains; or

e. Any effective combination of a, b, c, or d, or by any other method which prevents the entrance of flies.

2. All outer doors are tight and self-closing. Screen doors shall open outward.

3. All outer openings are rat-proofed to the extent necessary to prevent the entry of rodents.

Note.--The evidence of insects and/or rodents in the plant shall be considered under Item 9p.

ITEM 4p. LIGHTING AND VENTILATION

All rooms in which milk, milk products, whey and condensed or dry milk products are processed, handled, stored or packaged and/or in which containers, equipment, and utensils are washed shall be well lighted and well ventilated.

Public-Health Reason.--Ample light promotes cleanliness. Proper ventilation reduces odors and prevents condensation upon interior surfaces.

ADMINISTRATIVE PROCEDURES

This item is deemed to be satisfied when:

1. Adequate light sources are provided (natural, artificial, or a combination of both) which furnish at least 20 foot-candles of light in all working areas. This shall apply to all rooms where milk, milk products, whey, and condensed and dry milk products are handled, processed, stored, packaged or where utensils, containers, and/or equipment are washed. Dry-storage and cold-storage rooms shall be provided with at least 5 foot-candles of light.

2. Ventilation in all rooms is sufficient to keep them reasonably free of odors and excessive condensation on equipment, walls, and ceilings.

3. Pressurized ventilating systems, if used, have a filtered air intake.

4. Ventilating systems in packaging rooms, where used, are separate systems and where possible have the ducts installed in a vertical position.

ITEM 5p. SEPARATE ROOMS

There shall be separate rooms for:

1. The pasteurizing, processing, cooling, reconstitution, condensing, and drying of milk, milk products, whey, whey products, or condensed products.

2. Packaging of dry products.

3. The cleaning of milk cans and containers and dry product containers.

4. Cleaning and sanitizing facilities for milk tank trucks in plants receiving milk or whey in such tanks.

5. Receiving cans of milk and milk products in plants receiving such cans.

Rooms in which milk, milk products whey or whey products are handled, processed, stored, condensed, dried and packaged, or in which containers, utensils and equipment are washed or stored, shall not open directly into any stable or any room used for domestic purposes. All rooms shall be of sufficient size for their intended purposes.

Public Health Reason.--If the washing and sanitization of containers are conducted in the same room in which the pasteurizing, processing, cooling, or packaging is done, there is opportunity for the pasteurized product to become contaminated. For this reason, separate rooms are required as indicated. The unloading of cans of raw milk directly into the pasteurizing room is apt to increase the prevalence of flies therein, as well as to render it too public.

ADMINISTRATIVE PROCEDURES

This item is deemed to be satisfied when:

1. Pasteurizing, processing, reconstitution, cooling, and condensing are conducted in a single room(s), but not in the

same room(s) used for the cleaning of milk cans and portable storage bins or the unloading and/or cleaning and sanitization of milk tank trucks.

2. All bulk milk or whey storage tanks are vented into a room used for pasteurization, processing, or cooling operations, or into a storage tank gallery room, provided that vents located elsewhere which are adequately equipped with air filters so as to preclude the contamination of the milk or whey, shall be considered satisfactory.

3. Solid doors installed in required partitions are self-closing.

4. Facilities for the cleaning and sanitizing of milk tank trucks are properly equipped for manual and/or mechanical operations. When such facilities are not provided on the plant premises, these operations shall be performed at a receiving station, transfer station, or separate tank washing installation.

5. Rooms in which milk, milk products, whey, condensed or dry milk products are handled, processed, or stored, or in which containers, utensils, and equipment are washed or stored, do not open directly into any stable or any room used for domestic purposes.

6. All rooms shall be of sufficient size for their intended purposes.

ITEM 6p. TOILET-SEWAGE DISPOSAL FACILITIES

Every plant shall be provided with toilet facilities conforming with the regulations of the...of...[1] Toilet rooms shall not open directly into any room in which milk, milk products, whey, or condensed and dry milk products are processed. Toilet rooms shall be completely enclosed and shall have tight-fitting, self-closing doors. Dressing rooms, toilet rooms, and fixtures shall be kept in a clean condition, in good repair, and shall be well ventilated and well lighted. Sewage and other liquid wastes shall be disposed of in a sanitary manner.

Public-Health Reason.--Human excreta are potentially dangerous and must be disposed of in a sanitary manner. The organisms causing typhoid fever, para-typhoid fever, and dysentery, may be present in the body discharges of cases or carriers. Sanitary toilet facilities are necessary to protect the products, equipment, and containers from fecal contamination which may be carried by flies, other insects, hands, or clothing. When the toilet facilities are of a satisfactory type, are kept clean, and are in good repair, the opportunities for the spread of contamination by the above means are minimized. The provision of an intervening room or vestibule between the toilet room and any room in which milk, milk products, whey or condensed whey are processed or dried makes it less likely that contaminated flies will enter these rooms. It will also minimize the spread of odors.

The wastes resulting from the cleaning and rinsing of containers, equipment, and floors, from flush toilets, and from washing facilities, should be properly disposed of so as not to contaminate the equipment, or to create a nuisance or a public health hazard.

ADMINISTRATIVE PROCEDURES

This item is deemed to be satisfied when:

1. The plant is provided with toilet facilities conforming with the regulations of the...of...[1].

2. Toilet rooms do not open directly into any room in which milk, milk products, whey, or condensed and dry milk products are processed or dried.

3. Toilet rooms are completely enclosed and have tight-fitting self-closing doors.

4. Dressing rooms, toilet rooms, and fixtures are kept in a clean condition, in good repair, and are well ventilated and well lighted.

5. Toilet tissue and easily cleanable covered waste receptacles are provided in toilet rooms.

6. All plumbing is installed to meet the applicable provisions of the State or local plumbing code.

7. Sewage and other liquid wastes are disposed of in a sanitary manner.

8. Non-water-carried sewage disposal facilities are not used.

ITEM 7p. WATER SUPPLY

Water for plant purposes shall be from a supply properly located, protected, and operated and shall be easily accessible, adequate, and of a safe, sanitary quality.

Public-Health Reason.--The water supply should be accessible in order to encourage its use in cleaning operations; it should be adequate so that cleaning and rinsing may be thorough; and it should be of safe, sanitary quality in order to avoid the contamination of equipment and containers.

ADMINISTRATIVE PROCEDURES

This item is deemed to be satisfied when:

1. Water for plant purposes is from an adequate supply, properly located, protected, and operated. It shall be easily accessible and of a safe, sanitary quality.

2. The water supply is approved as safe by the State water control authority, and, in the case of individual water systems, complies with at least the specification outlined in Appendix D and the bacteriological standards in Appendix G, of the *Grade A Pasteurized Milk Ordinance--1995 Recommendations of the United States Public Health Service/Food and Drug Administration*.

3. There is no cross-connection between the safe water supply and any unsafe or questionable water supply, or any source of pollution through which the safe water supply might become contaminated. A connection between the water supply piping and a make-up tank (such as for cooling or condensing), unless protected by an air gap or effective backflow preventer, constitutes a violation of this requirement.

4. Condensing water for milk or whey evaporators is from a source complying with 2 above. *Provided*, that when approved by the regulatory agency, water from sources not complying with 2 above may be used when the evaporator is constructed and operated to preclude contamination of such equipment or its contents by condensing water or by water used to produce vacuum. Means of preventing such contamination are:

a. Use of a surface type condenser in which the condensing water is physically separated from the vapors and condensate; or

b. Use of reliable safeguards to prevent the overflow of condensing water from the condenser into the evaporator. Such safeguards include a barometric leg extending at least 35 feet vertically from the invert of the outgoing condensing water line to the free level at which the leg discharges, or a safety shutoff valve, located on the water feed line to

the condenser, automatically actuated by a control which will shut off the inflowing water when the water level rises above a predetermined point in the condenser. This valve may be actuated by water, air, or electricity, and shall be designed so that failure of the primary motivating power will automatically stop the flow of water into the condenser.

5. Condensing water from all milk or whey evaporators, complying with 2. above, and water reclaimed from milk, milk products, or whey, may be reused when all necessary means of protection are afforded and it complies with the procedures outlined in Appendix A. of this *Ordinance*.

6. New individual water supplies and water supply systems, which have been repaired or otherwise become contaminated, are disinfected before being placed in use (see Appendix D of the *Grade A Pasteurized Milk Ordinance--1995 Recommendations of the United States Public Health Service/Food and Drug Administration*). The supply shall be made free of the disinfectant by pumping to waste before any sample for bacteriological testing shall be collected.

7. Samples for bacteriological testing of individual water supplies are taken upon the initial approval of the physical structure, each 6 months thereafter, and when any repair or alteration of the water supply system has been made. Bacteriological examinations shall be conducted in a laboratory acceptable to the regulatory agency. To determine if water samples have been taken at the frequency established in this section, the interval shall include the designated six month period plus the remaining days of the month in which the sample is due.

8. Current records of water test results are retained on file with the regulatory agency or as the regulatory agency directs.

9. A potable water supply which meets the criteria of this section may be connected to the product feed line of a steam vacuum evaporator. *Provided*, that the water supply is protected at the point of connection by an approved backflow prevention device.

ITEM 8p.
HAND-WASHING FACILITIES

Convenient hand-washing facilities shall be provided, including hot and cold and/or warm running water, soap, and individual sanitary towels or other approved hand-drying devices. Hand-washing facilities shall be kept in a clean condition and in good repair.

Public-Health Reason.--Proper use of hand-washing facilities is essential to personal cleanliness, and reduces the likelihood of contamination of products.

ADMINISTRATIVE PROCEDURES

This item is deemed to be satisfied when:

1. Convenient hand-washing facilities are provided, including hot and cold and/or warm running water, soap, and individual sanitary towels or other approved hand-drying devices.

2. Hand-washing facilities are convenient to all toilets and to all rooms in which milk plant operations are conducted.

3. Hand-washing facilities are kept in a clean condition and in good repair.

4. Steam-water mixing valves and vats for washing bottles, cans, and similar

equipment are not used as hand-washing facilities.

ITEM 9p.
PLANT CLEANLINESS

All rooms in which milk, milk products, whey, and condensed and dry milk products are handled, processed, or stored, and/or in which containers, utensils, or equipment are washed or stored, shall be kept clean, neat, and free of evidence of insects and rodents. Only equipment directly related to processing operations or to handling of containers, utensils, and equipment shall be permitted in the pasteurizing, processing, cooling, packaging, and bulk milk or whey storage rooms.

Public-Health Reason.--Clean floors, free of litter, clean walls, ceilings and all other areas of the plant are conducive to clean product handling operations. Cleanliness and freedom from flies, insects and rodents reduces the likelihood of contamination of the products. Excess or unused equipment or equipment not directly related to the plant operations can be detrimental to the cleanliness of the plant.

ADMINISTRATIVE PROCEDURES

This item is deemed to be satisfied when:

1. Only equipment directly related to processing operations or the handling of containers, utensils, and equipment is permitted in the pasteurizing, processing, cooling, packaging, and bulk milk or whey storage rooms.

2. All piping, floors, walls, ceilings, fans, shelves, tables, and the non-product contact surfaces of other facilities and equipment are clean and free of dust.

3. No trash, solid waste or waste dry products are stored within the plant, except in covered containers.

4. All rooms in which milk, milk products, whey, and condensed and dry milk products are handled, processed, or stored, and/or in which containers, utensils, or equipment are washed or stored, are kept clean, neat, and free of evidence of insects and rodents.

5. Excessive product dust shall be kept under effective control by the use of exhaust and collective systems designed for in-plant dust control. Tailings and materials collected from exhaust collective systems shall not be used for human consumption.

ITEM 10p.
SANITARY PIPING

All sanitary piping, fittings, and connections which are exposed to milk, milk products, whey, or condensed milk products or condensed whey or from which liquids may drip, drain, or be drawn into milk, milk products, whey, condensed and dry milk products shall consist of smooth, impervious, corrosion-resistant, nontoxic, easily cleanable material. All piping shall be in good repair. Milk, milk products, whey, whey products, condensed milk products and condensed whey shall be conducted from one piece of equipment to another only through sanitary piping.

Public-Health Reason.--Milk piping and fittings are sometimes so designed as to be difficult to clean; or they may be constructed of metal which corrodes easily. In either case, it is unlikely that they will be kept clean. "Sanitary piping" is a term which

applies to properly designed and properly constructed piping.

The purpose of the third sentence is to prevent exposure of the pasteurized product to contamination.

ADMINISTRATIVE PROCEDURES

This item is deemed to be satisfied when: 1. All sanitary piping, fittings, and connections which are exposed to milk, milk products, whey, condensed milk products or condensed whey or from which liquids may drip, drain, or be drawn into products, consist of smooth, impervious, corrosion-resistant, nontoxic, easily cleanable material.

2. All sanitary piping, connections, and fittings consist of:

a. Stainless steel of the AISI (American Iron and Steel Institute) 300 series; or

b. Equally corrosion-resistant metal which is nontoxic and nonabsorbent; or

c. Heat resistant glass.

d. Plastic, or rubber and rubber-like materials, which are relatively inert, resistant to scratching, scoring, decomposition, crazing, chipping, and distortion under normal use conditions; which are nontoxic, fat resistant, relatively nonabsorbent; which do not impart flavor or odor to the products; and which maintain their original properties under repeated use conditions, may be used for gaskets, sealing applications, and for short flexible takedown jumpers or connections where flexibility is required for essential or functional reasons.

3. Sanitary piping, fittings, and connections are designed to permit easy cleaning, kept in good repair, and free of breaks or corrosion, and contain no dead ends of piping in which product may collect.

4. All interior surfaces of demountable piping, including valves, fittings, and connections are designed, constructed, and installed to permit inspection and drainage. 5. All cleaned-in-place pipelines and return-solution lines are rigid, self-draining, and so supported to maintain uniform slope and alignment. Return solution lines shall be constructed of material meeting the specifications of 2. above. If gaskets are used, they shall be self-positioning, of material meeting the specifications outlined in 2. above, and designed, finished, and applied to form a smooth, flush interior surface. If gaskets are not used, all fittings shall have self-positioning faces designed to form a smooth, flush interior surface. All interior surfaces of welded joints in pipelines shall be smooth and free from pits, cracks, or inclusions.

In the case of welded lines, all welds shall be inspected by the use of a boroscope or other appropriate available inspection device, as they are made; and such welds shall be approved by the regulatory agency.

Each cleaning circuit shall have access points for inspection in addition to the entrances and exits. These may be valves, removable sections, fittings, or other means or combinations that are adequate for inspection of the interior of the line. These access points shall be located at sufficient intervals to determine the general condition of the interior surfaces of the pipeline.

Detailed plans for welded pipeline systems shall be submitted to the regulatory agency for written approval prior to installation. No alteration or addition shall be made to any welded pipeline system without prior written approval from the regulatory agency.

6. Milk, milk products, whey, condensed milk products and condensed whey

are conducted from one piece of equipment to another only through sanitary piping.

7. Because of the high pressure required to obtain proper dispersal of the product in the drying chamber, the pipeline between the high pressure pump and the dryer nozzle may be connected with pressure-tight threaded fittings, or may be welded.

ITEM 11p.
CONSTRUCTION AND REPAIR OF CONTAINERS AND EQUIPMENT

All multi-use containers and equipment with which milk, milk products, whey, and condensed and dry milk products come into contact shall be of smooth, impervious, corrosion-resistant, nontoxic material; shall be constructed for ease of cleaning; and shall be kept in good repair. All single-service containers, closures, gaskets, and other articles with which milk, milk products, whey, and condensed and dry milk products come in contact shall be nontoxic, and shall have been manufactured, packaged, transported, and handled in a sanitary manner. Articles intended for single-service use shall not be reused.

Public-Health Reason.--With equipment which is not constructed and located so that it can be cleaned easily, and which is not kept in good repair, it is unlikely that it will be properly cleaned. Single-service articles, which have not been manufactured and handled in a sanitary manner may contaminate the product.

ADMINISTRATIVE PROCEDURES

This item is deemed to be satisfied when:

1. All multi-use containers and equipment with which milk, milk products, whey, and condensed and dry milk products come into contact are of smooth, impervious, corrosion-resistant, and nontoxic material.

2. All milk, milk product, whey and condensed and dry milk product contact surfaces of multi-use containers and equipment consist of:

a. Stainless steel of the AISI (American Iron and Steel Institute) 300 series; or

b. Equally corrosion-resistant metal which is nontoxic and nonabsorbent; or

c. Heat resistant glass; or

d. Plastic or rubber and rubber-like materials which are relatively inert, resistant to scratching, scoring, decomposition, crazing, chipping, and distortion under normal use conditions; which are nontoxic, fat resistant, relatively nonabsorbent, and do not impart flavor or odor to the product; and which maintain their original properties under repeated use conditions.

3. All joints in containers, equipment, and utensils shall be flush and finished as smooth as adjoining surfaces, or the surface, if vitreous, is continuous. Tile floors are not acceptable in dryers. Joints on equipment coming in contact with dry products only or used for hot air piping may be sealed by other acceptable means. Where a rotating shaft is inserted through a surface with which milk, milk products, whey, and condensed and dry milk products come into contact, the joint between the moving and stationary surfaces shall be close fitting. Grease and oil from gears, bearings, and cables shall be kept out of the milk, milk products, whey, and condensed and dry milk products. Where a thermometer or temperature sensing element is inserted through a surface with which milk, milk

products, whey, and condensed whey or milk products come into contact, a pressure-tight seal shall be provided ahead of all threads and crevices.

4. All openings in covers of tanks, vats, separators, and similar equipment, are protected by raised edges, or otherwise to prevent the entrance of surface drainage. Condensation-diverting aprons shall be provided as close to the tank or vat as possible on all pipes, thermometers, or temperature sensing elements, and other equipment extending into a tank, bowl, vat, or distributor, unless a watertight joint is provided.

5. All surfaces with which milk, milk products, whey, and condensed and dry milk products come into contact, except pneumatic ducts and cyclonic or air separator collectors, shall be easily accessible or demountable for manual cleaning or designed for mechanical cleaning. All product-contact surfaces shall be readily accessible for inspection and shall be self-draining. Wing nuts, bayonet locks, and similar devices shall be used whenever possible to promote easy disassembly.

6. There are no threads used in contact with milk, milk products, whey, condensed whey or milk products except where needed for functional and safety reasons, such as in clarifiers, pumps, and separators. Such threads shall be of a sanitary type, except those used on high pressure lines between the high pressure pump and the dryer nozzle.

7. All multi-use containers and other equipment have rounded corners, are in good repair and free from breaks, crevices, and corrosion. Milk cans shall have umbrella-type covers.

8. Strainers, if used, are of perforated metal design, and so constructed as to utilize single-service strainer media. Multiple-use woven material shall not be used for straining milk. *Provided*, That when required for functional reasons inherent to the production of certain products, such as buttermilk, whey, dry whey, and dry milk products, woven material may be used where it is impractical to use perforated metal. However, woven material parts shall be mechanically cleaned by such methods that thoroughly clean the woven material and do not contaminate the product.

9. Sifters for dry products are so constructed as to utilize single-service or multi-service use strainer media conforming with:

a. Plastic materials listed in 2.d, above;
or

b. Woven stainless steel wire conforming to 2.a. above; or

c. Cotton, linen, silk, or synthetic fibers which are nontoxic, relatively insoluble, easily cleanable and do not impart a flavor to the product.

Tailings shall be continuously discharged from sifters through dust tight connections to an enclosed container, and shall not be used for human consumption.

10. All single-service containers, closures, gaskets, and other articles, with which milk, milk products, whey, condensed and dry milk products come into contact, are nontoxic. Articles intended for single-service use shall not be reused.

11. All paper, plastics, foil, adhesives, and other components of containers shall be free from deleterious substances and comply with the requirements of the *Federal Food, Drug and Cosmetic Act, as amended*.

Note.--*3-A Sanitary Standards*--3-A Sanitary Standards for dairy equipment are promulgated jointly by the Sanitary Standards Subcommittee of the Dairy Industry Committee, the Committee on Sanitary Procedure of the International Association of Milk, Food, and Environmental Sanitarians, Inc., and the Milk Safety

Branch, Division of Cooperative Programs, Office of Field Programs, Food and Drug Administration, Public Health Service, Department of Health and Human Services. Equipment manufactured in conformity with 3-A Sanitary Standards complies with the sanitary design and construction standards of this *Ordinance*.

ITEM 12p.
CLEANING AND SANITIZING OF CONTAINERS AND EQUIPMENT

The product-contact surfaces of all multi-use containers, utensils, and equipment used in the processing, drying, packaging, storing, handling and transporting of milk, milk products, whey, and condensed and dry milk products shall be effectively cleaned and sanitized after each use. *Provided*, That cloth-collector systems used on dryers shall be cleaned and sanitized or purged at intervals and by methods recommended by the manufacturer and approved by the regulatory agency.

Public Health Reason.--Milk, milk products, whey, and condensed and dry milk products cannot be kept clean and safe, if permitted to come into contact with containers, utensils, and equipment which have not been properly cleaned and sanitized.

ADMINISTRATIVE PROCEDURES

This item is deemed to be satisfied when:

1. All multi-use containers and utensils are thoroughly cleaned after each use, and all equipment is thoroughly cleaned at least once each day used. *Provided*, That storage tanks shall be cleaned when emptied and shall be emptied at least every 72 hours. Storage tanks which are used to store raw milk or whey longer than 24 hours and silo tanks used for the storage of raw milk or whey, and which are installed after the adoption of this *Ordinance* shall be equipped with a temperature recording device complying with the specifications of Appendix E, page 107.

Whenever a tank truck has been washed and sanitized, as required by the regulatory agency , it shall bear a tag or a record shall be made showing the date, time and place and signature or initials of the employee or contract operator doing the work, unless the truck delivers to only one receiving unit where responsibility for cleaning and sanitizing can be definitely established without tagging. The tag shall be removed at the location where the tank truck is next washed and sanitized and kept on file for 25 days as directed by the regulatory agency.

2. Drying equipment, cloth-collector systems, packaging equipment and multi-use dry milk products and dry whey storage containers are cleaned at intervals and by methods recommended by the manufacturer and approved by the regulatory agency. Such methods may include cleaning without water by use of vacuum cleaners, brushes, or scrapers. After cleaning, such equipment is sanitized by a method approved by the regulatory agency. Cloth collector systems and all dry product contact surfaces downstream from the dryer shall be sanitized

or purged at intervals and by methods recommended by the manufacturer and approved by the regulatory agency.

Note.--Appendix H, page 167, contains additional information on dry cleaning of drying equipment, packaging equipment, and dry milk product and dry whey storage containers.

3. Storage bins used to transport dry products shall be dry cleaned after each usage and washed and sanitized at regular intervals.

4. Plants in which containers are washed manually are equipped with a two-compartment wash-and-rinse vat for this purpose. Such plants shall also provide a steam cabinet or individual steam-jet plate with hood for sanitizing of cleaned containers, or if sanitizing is done with chemicals, a third treatment vat.

5. Pipelines and/or equipment designed for mechanical cleaning meet the following requirements:

a. An effective cleaning and sanitizing regimen for each separate cleaning circuit shall be followed.

b. A temperature recording device, complying with the specifications in Appendix E, or a recording device which has been reviewed by FDA and found to provide sufficient information to adequately evaluate the cleaning and sanitizing regimen and which is approved by the local regulatory agency, shall be installed in the return solution line or other appropriate area to record the temperature and time during which the line or equipment is exposed to cleaning and sanitizing solutions.

c. Temperature recording charts shall be identified, dated, and retained for 3 months.

d. During each official inspection, the regulatory agency shall examine and initial temperature recording charts to verify the time of exposure to solutions and their temperatures.

6. All multi-use containers, equipment, and utensils are sanitized before use, employing one or a combination of the following methods or any other method which has been demonstrated to be equally efficient.

a. Exposure to an enclosed jet of steam for not less than 1 minute.

b. Complete immersion in hot water at a temperature of at least 77ºC (170ºF), for at least 5 minutes or exposure to a flow of hot water at a temperature of at least 77ºC (170ºF), as determined by use of a suitable accurate thermometer located at the outlet, for at least 5 minutes.

c. Exposure to hot air at a temperature of at least 83ºC (180ºF) for at least 20 minutes as measured by an acceptable indicating thermometer located in the coldest zone.

d. Complete immersion for at least 1 minute in, or exposure for at least 1 minute to a flow of a chemical sanitizer of acceptable strength. All product-contact surfaces must be wetted by the sanitizing solution, and piping so treated must be filled. Sanitizing sprays may be used. Chemical solutions, once used, shall not be reused for sanitizing but may be reused for other purposes. Assembled equipment must be sanitized prior to each day's run. (See Appendix B., p. 87, for a more complete discussion of sanitizers and sanitizing techniques.)

7. Higher temperatures and longer periods may be necessary for high-pressure lines. It has been demonstrated that alkaline cleaners at 72ºC (160ºF) for 30 minutes, followed by an acid cleaner for 30 minutes at the same temperature, produce satisfactory results.

Studies have indicated that effective sanitization of the dryer may be accomplished by the following procedure:

a. Operate spray nozzles with water at temperature and rates at least as high as those employed during the drying operation.

b. Adjust airflow to give at least 0.5 inch (water) pressure in the drying chamber.

c. Continue the operation for 20 minutes while a temperature of not less than 85ºC (185ºF) is being registered at the discharge from the dryer.

Portions of the drying system not reached by this treatment or dryers for which this procedure is not practical shall be treated by one of the methods prescribed above, or by other methods of demonstrated effectiveness.

8. The residual bacteria count of multi-use and single-service containers used for the packaging of dry products shall not exceed one per milliliter of capacity when the rinse test is used or not over 50 colonies per 8 square inches (one per square centimeter) of product-contact surface when the swab test is used, in 3-out-of-4 samples taken at random on a given day. All multi-use and single-service containers shall be free of coliform organisms.

ITEM 13p.
STORAGE OF CLEANED CONTAINERS AND EQUIPMENT

After cleaning, all multi-use milk, milk product, whey, and condensed and dry milk product containers, utensils, and equipment shall be transported and stored to assure complete drainage, and shall be protected from contamination before use.

PUBLIC-HEALTH REASON.-- If containers and equipment are not protected from contamination, the value of sanitization may be partly or entirely nullified.

ADMINISTRATIVE PROCEDURES

This item is deemed to be satisfied when:

1. All multi-use containers, equipment and utensils, after cleaning, are drained dry and protected from contamination.

2. All cans and other multiuse containers and equipment are transported and stored in clean crates or on racks in a clean dry place, and are protected from splash, flies and dust. (For protection against overhead leakage and condensation, see item 15p.) Such containers as can practicably be inverted shall be stored in an inverted position. Storage racks shall be constructed of metal which is protected against rusting.

ITEM 14p.
STORAGE OF SINGLE-SERVICE CONTAINERS, UTENSILS AND MATERIALS

Single-service parchment paper, containers, gaskets, liners, bags and other single-service articles for use in contact with milk, milk products, whey, and condensed and dry milk products shall be purchased and stored in sanitary wrappings, or cartons; shall be kept therein in a clean, dry place until used; and shall be handled in a sanitary manner.

Public-Health Reason.--Soiled or contaminated parchment paper, gaskets, and single-service containers nullify the benefits of the safeguards prescribed throughout this *Ordinance*.

ADMINISTRATIVE PROCEDURES

This item is deemed to be satisfied when:

1. Parchment paper, containers, gaskets, liners, bags, and other single-service articles for use in contact with milk, milk products, whey, and condensed and dry milk products are purchased and stored in sanitary wrappings, or cartons; are kept in a clean, dry place until used; and are handled in a sanitary manner.

2. Paperboard shipping containers used to enclose plastic bags or unfilled containers are used only once unless other methods are employed to protect the containers from contamination.

3. Cartons or boxes from which contents have been partially removed are kept closed.

ITEM 15p. PROTECTION FROM CONTAMINATION

Condensing and/or drying plants, equipment, and facilities shall be located and conducted to prevent any contamination of milk, milk products, whey, condensed and dry milk products, ingredients, equipment, containers, and utensils. All milk, milk products, whey, condensed and dry milk products or ingredients which have been spilled, overflowed, or leaked shall be discarded. The processing or handling of products other than Grade A milk, milk products, whey products, and whey in the condensing and/or drying plant or dry milk packaging plant shall be performed to preclude the contamination of such Grade A products. The storage, handling, and use of poisonous or toxic materials shall be performed to preclude the contamination of milk, milk products, whey and whey products or ingredients of such milk, milk products, whey and whey products or the product-contact surfaces of all equipment, containers or utensils.

Public-Health Reason.--Because of the nature of milk, milk products, and whey and their susceptibility to contamination by bacteria, chemicals, and other adulterants, every effort should be made to provide adequate protection for the milk, milk products, and whey at all times. Misuse of pesticides and other harmful chemicals can provide opportunities for contamination of the products or equipment with which the products come in contact.

ADMINISTRATIVE PROCEDURES

Item 15p (A)

This item is deemed to be satisfied when:

1. Equipment and operations are so located within the plant as to prevent overcrowding and contamination of cleaned and sanitized containers, equipment, and utensils by splash, condensation, or manual contact.

2. All product-contact surfaces of containers, equipment, and utensil are covered or otherwise protected to prevent the access of insects, dust, condensation, and other contamination. All openings including valves and piping attached to milk or whey storage and milk tank trucks, pumps, or vats, etc., shall be capped or otherwise properly protected. While unloading at a condensing and/or drying plant, one of the following conditions shall be met:

a. If the area is completely enclosed (walls and ceiling, with doors closed) during the unloading process and the dust-cover or dome and the manhole cover is opened slightly and held in this position by the metal clamps used to close the cover, than a filter is not required. However, if the dust-cover and/or manhole cover(s) are opened in excess of that provided by the metal clamps or the covers have been removed, then a suitable filter is required for the manhole.

b. If the area is not completely enclosed or doors of the unloading area are open during unloading a suitable filter is required for the manhole or air inlet vent and suitable protection must be provided over the filter holding apparatus or a roof or ceiling over the area. When weather and environmental conditions permit, manhole openings and covers of milk tank trucks may be opened outdoors for the short period of time necessary for the collection of samples for animal drug residue screening. Direct connections from milk tank truck to milk tank truck must be made from valve to valve or through the manhole lid *Provided*, that all connections are made ferrule to ferrule and adequate protection is provided for the air vent.

Receiving and dump vats shall be completely covered, except during washing and sanitizing, and when milk is being dumped. Where strainers are used, the cover for the vat opening shall be designed to cover the opening with the strainer in place.

3. Ingredients added to milk, milk products, whey, or condensed and dry milk products are handled in such a manner as to avoid contamination.

4. Whenever air under pressure is used for the agitation or movement of milk or whey or is directed at a product-contact surface, it is free of oil, dust, rust, excessive moisture, extraneous materials, and odor, and shall otherwise comply with the applicable standards of Appendix C. Air intakes for drying equipment shall be located so as to minimize the amount of atmospheric contamination and shall be equipped with suitable single-service filters, multi-use filters, or continuous air filter systems. (See Appendix C, p. 93)

5. Air exhausts from dryer systems are covered when dryers are not in operation.

6. Whenever steam is used in contact with milk, milk products, or whey it shall be of culinary quality and shall comply with the applicable standards of Appendix D. The use of steam containing toxic substances is expressly prohibited.

7. All ingredients and non-product-contact materials used in the preparation or packaging of condensed and dry milk products are stored in a clean place and are so handled as to prevent their contamination.

8. Pasteurized milk, milk products, and condensed milk are not strained or filtered except through a perforated metal strainer.

9. Only those poisonous or toxic materials, including but not limited to insecticides, rodenticides, detergents, sanitizers, caustics, acids, and related cleaning compounds necessary for the maintenance of the condensing, and/or drying plant are present in the condensing and/or drying plant.

10. Those poisonous or toxic materials that are necessary are not stored in any room where milk, milk products, or whey are received, processed, pasteurized or stored, or where equipment, containers or utensils are washed or where single-service containers, closures, or bags are stored.

11. Those poisonous or toxic materials that are necessary are stored in a separate area of the plant in prominently and distinctly labeled containers. *Provided*, that

this does not preclude the convenient availability of detergents or sanitizers to areas where equipment, containers, and utensils are washed and sanitized.

12. Only insecticides and rodenticides approved by the regulatory agency and/or registered with the U.S. Environmental Protection Agency shall be used for insect and rodent control. Such insecticides and rodenticides shall be used only in accordance with the manufacturer's label directions and shall be prevented from contaminating milk, milk products, whey, condensed and dry milk products, containers, equipment, and utensils.

13. In the case of separating non-Grade A products, a water rinse after processing non-Grade A and prior to Grade A is adequate separation, provided both are processed as Grade A and raw and paseurized products are kept physically separated.

Item 15p (B)

1. During processing, pipelines and equipment used to contain or conduct milk, milk products, whey, condensed and dry milk products shall be effectively separated from tanks or circuits containing cleaning, and/or sanitizing solutions. Tanks, pipelines and equipment used to contain or conduct pasteurized milk and milk products shall be separated from tanks, pipelines and equipment used to contain or conduct raw milk and milk products. This section does not require separate raw and pasteurized systems.

2. All milk, milk products, whey, and condensed milk products or condensed whey and whey products which have overflowed, leaked, been spilled, or improperly handled are discarded. Milk, milk products, whey, whey products, condensed milk products and condensed whey drained from processing equipment at the end of the run or milk or whey solids rinsed from equipment, containers, or pipelines, shall be re-pasteurized only if such milk, milk products, whey, whey products, condensed milk products and condensed whey are handled in a sanitary manner and maintained at 7ºC (45ºF) or less. When the handling and/or refrigeration of such milk, milk products, whey, whey products, condensed milk products and condensed whey are not in compliance with this requirement, they shall be discarded. Milk, milk products, whey, whey products, condensed milk products and condensed whey from damaged, punctured or otherwise contaminated containers or product from out of code containers shall not be re-pasteurized for Grade A use.

3. Means are provided to prevent contamination of milk, milk products, whey, condensed and dry milk products, containers, utensils, and equipment by drippings, spillage, and splash from overhead piping, platforms, or mezzanines.

4. No product is handled in the condensed and/ or drying plant that may create a public health hazard. Permission to handle products other than those defined in Section 1 or to conduct operations in equipment or rooms, other than those for which they are designated, should be provisional and subject to revocation if found objectionable.

5. Grade A milk, milk products, whey, and condensed milk and dry milk products are not permitted to come into contact with ungraded or lower grade milk, milk products, whey, condensed and dry milk products or with utensils or equipment which have been in contact with ungraded or a lower grade of milk, milk products, whey, or condensed and dry milk products unless such utensils and equipment have been thoroughly cleaned and effectively sanitized. Carryover of

ungraded or lower grade product or any other product to Grade A products shall be avoided. When two grades of milk are received in the same plant in dual receiving equipment, a swing type dump grill is not permitted. When two grades of milk or whey are received in the plant by milk tank trucks, separate receiving equipment and unloading pumps shall be provided.

ITEM 16p.
PASTEURIZATION

Pasteurization shall be performed as defined in Section 1, Definition P of this *Ordinance*. In all cases, pasteurization of raw milk, raw milk products, whey, or whey products shall be performed before the raw milk, raw milk products, whey, or whey products enter the evaporator or condensing equipment and shall be performed in the plant in which the evaporation or condensing is done. All condensed milk transported to a drying plant shall be re-pasteurized at the plant at which it is dried. If condensed whey contains at least 40 percent total solids has been partially crystallized by cooling, it may be transported to a separate drying plant for drying without re-pasteurization provided the following conditions are complied with:

1. The condensed, partially crystallized whey is cooled and maintained at 7ºC (45ºF) or less;

2. Milk transport tanks used to transport the condensed, partially crystallized whey shall be washed and sanitized immediately prior to filling and are sealed after filling until unloading;

3. Separate unloading pumps and pipelines shall be provided and used only for the unloading of the condensed, partially crystallized whey. Such pumps and pipelines shall be cleaned and sanitized as a separate cleaning circuit.

Public-Health Reason.--The public health value of pasteurization is unanimously agreed upon by health officials. Long experience conclusively shows its value in the prevention of diseases which may be transmitted through milk. Pasteurization is the only practical, commercial measure which, if properly applied to all milk, will destroy all milkborne disease organisms. Examination of cows and milk handlers, while desirable and of great value, can be done only at intervals and, therefore, it is possible for pathogenic bacteria to enter the milk for varying periods before the disease condition is discovered. Disease bacteria may also enter milk accidentally from other sources, such as flies, contaminated water, utensils, etc. It has been demonstrated that the time-temperature combinations specified by this *Ordinance* if applied to every particle of milk and whey, will destroy all milkborne pathogens. Compilations of outbreaks of milkborne disease by the United States Public Health Service, over many years, indicate that the risk of contracting disease from raw milk is approximately 50 times as great as from milk labeled "pasteurized".

A note of caution is in order. Although pasteurization destroys the organisms, it does not destroy the toxins that may be formed in milk or whey when certain staphylococci are present (as from udder infections), and when the milk or whey is not properly refrigerated before pasteurization. Such toxins may cause severe illness.

Numerous studies and observations clearly prove that the food value of milk is not significantly impaired by pasteurization.

ADMINISTRATIVE PROCEDURES

This item is deemed to be satisfied when:

1. Every particle of milk, milk products, or whey is heated in properly designed and operated equipment to one of the temperatures specified in the following table and held continuously at or above that temperature for at least the time specified.

Temperature	Time
*63°C (145°F)	30 minutes
*72°C (161°F)	15 seconds
89°C (191°F)	1.0 second
90°C (194°F)	0.5 second
94°C (201°F)	0.1 second
96°C (204°F)	0.05 second
100°C (212°F)	0.01 second

*if the fat content of the milk product or whey is 10 percent or more, or if it contains added sweeteners, or is condensed milk or condensed milk product, the specified temperature shall be increased by 3°C (5°F).

Provided, that nothing in this definition shall be construed as barring any other pasteurization process which has been recognized by the Food and Drug Administration to be equally effective and which is approved by the State regulatory agency.

2. All milk products or whey are pasteurized, prior to entrance of the milk product or whey into reverse osmosis, ultra-filtration, evaporator or condensing equipment, and shall be performed in the plant where the processing is done. Provided, that if the product is acid whey (ph less than 4.7) or the product is processed in Reverse Osmosis or Ultra-filtration equipment at temperatures less than 7°C (45°F) or the product is not processed in equipment capable of recirculation, pasteurization is not required immediately prior to the Reverse Osmosis or Ultra-filtration equipment.

3. All condensed milk transported to a drying plant shall be re-pasteurized at the plant where it is dried.

4. If condensed whey containing at least 40 percent total solids has been partially crystallized by cooling, it may be transported to a separate drying plant for drying without re-pasteurization provided the following conditions are complied with:

a. The condensed, partially crystallized whey is cooled and maintained at 7°C (45°F) or less.

b. Milk transport tanks used to transport the condensed, partially crystallized whey shall be washed and sanitized immediately prior to filling and are sealed after filling until unloading.

c. Separate unloading pumps and pipelines shall be provided and used only for the unloading of the condensed, partially crystallized whey. Such pumps and pipelines shall be cleaned and sanitized as a separate cleaning circuit.

5. The design and the operation of pasteurization equipment and all appurtenances thereto shall comply with the applicable specifications and operational procedures of subitems 16(A) through (C) as follows:

ITEM 16p(A). HIGH-TEMPERATURE, SHORT-TIME, (HTST) CONTINUOUS-FLOW PASTEURIZATION

Public-Health Reason.--See Public-Health Reason under Item 16p, page 60.

ADMINISTRATIVE PROCEDURES

1. INDICATING THERMOMETERS AND RECORDER/CONTROLLER INSTRUMENTS.--All indicating thermometers, and recorder/controller instruments and devices used in connection with the high-temperature, short-time, continuous-flow pasteurization of milk, milk products, whey, condensed milk products and condensed whey shall comply with the applicable specifications set forth in Appendix E.

2. AUTOMATIC MILK CONTROLLER.--Each high-temperature, short-time, continuous-flow pasteurization system shall be equipped with an automatic milk-flow control of the diversion type, which complies with the following definition, specifications, and performance requirements:

a. "Automatic Milk-flow Controls."--The term "automatic milk-flow controls" shall mean those safety devices which control the flow of product in relation to the temperature of the product, or heating medium and/or pressure, vacuum, or other auxiliary equipment. Milk-flow controls shall not be considered as part of the temperature control equipment. Milk-flow controls shall be of the flow-diversion type which automatically cause the diversion of the product in response to a sublegal pasteurization temperature. At sublegal temperatures, flow-diversion devices return the product to the raw product side of the heating system continuously until legal pasteurization temperatures are obtained; at which time, the device restores forward flow through the pasteurizer.

b. Flow-diversion devices.--Flow-diversion devices used in continuous pasteurizers shall comply with the following or equally satisfactory specifications:

(1) Forward flow of sub-temperature product, due to the omission or looseness of the connecting clip, shall be prevented by making the valve and its actuating mechanism integral; or, where there is a connecting device, by making it impossible to assemble the valve and its actuating mechanism, except in such manner that it will function properly; or, where there is a connecting device which may be omitted or shaken loose by providing for pushing, instead of pulling, the valve to the diverted position; or by providing that the pump will shut down when the product is below the pasteurization temperature and the valve is not in the fully-diverted position; or by any other equally satisfactory means.

(2) When a packing gland is used to prevent leakage around the actuating stem, it shall be impossible to tighten the stem packing nut to such an extent as to prevent the valve from assuming the fully-diverted position.

(3) A leak escape shall be installed on the forward-flow side of the valve seat. However, when back pressure is exerted on the forward-flow side of the valve seat, while the product flow is being diverted, the leak escape should lie between two valve seats, or between two portions of the same seat, one upstream and the other downstream from the leak escape. The leak escape shall be designed and installed to discharge all leakage to the outside, or to the constant-level tank through a line separate from the diversion line: *Provided*, That when leakage is discharged to the constant-level tank, a sight glass shall be

installed in the leak escape line to provide visual means of leak detection.

(4) The closure of the forward-flow seat shall be sufficiently tight so that leakage past it will not exceed the capacity of the leak escape device, as evidenced when the forward-flow line is disconnected; and, in order that proper seating may not be disturbed, the length of the connecting rod shall not be adjustable by the user.

(5) The flow-diversion device shall be so designed and installed that failure of the primary motivating power shall automatically divert the flow of product.

(6) The flow-diversion device shall be located downstream from the holder. The flow-control sensor shall be located in the product line not more than 18 inches upstream from the flow-control device.

(7) The pipeline from the diversion port of the flow-diversion device shall be self-draining, and shall be free of restrictions or valves, unless such restrictions or valves are so designed that stoppage of the diversion line cannot occur.

(8) When it is used, the pipeline from the leak detector port of the flow-diversion device shall be self-draining, and shall be free of restrictions or valves.

(9) The flow diversion device shall be interwired, via micro-switches to the timing pump or timing system, to insure that flow occurs only when the valve(s) are in the fully forward flow or fully divert position. A one second maximum "off" time delay is allowable to maintain the flow promoting device in the "on" position through the travel time of the valve(s).

c. Milk-flow controller instrumentation.--The following requirements shall be met with respect to the instrumentation of the milk-flow controller:

(1.) The thermal limit controller shall be set and sealed so that forward flow of product cannot start unless the temperature at the controller sensor is above the required pasteurization temperature as defined in Definition P of this *Ordinance* for the milk, milk product, whey, condensed milk products and condensed whey and the process used, nor continue during descending temperatures when the temperature is below the required pasteurization temperature. The seal shall be applied by the regulatory agency after testing, and shall not be removed without immediately notifying the regulatory agency. The system shall be so designed that no product can be bypassed around the controller sensor which shall not be removed from its proper position during the pasteurization process. The cut-in and cut-out product temperatures, as shown by the indicating thermometer, shall be determined at the beginning of each day's operation and entered upon the recorder chart daily by the plant operator.

(2.) In the case of HHST pasteurization systems, utilizing the temperatures of 89ºC (191ºF) and above, and holding times of 1 second or less, with the flow diversion device located downstream from the regenerator and/or cooler section, additional temperature controllers and timers shall be inter-wired with the thermal limit controller, and the control system shall be set and sealed so that forward flow of product cannot start until all product contact surfaces between the holding tube and flow diversion device have been held at or above the required pasteurization temperature, continuously and simultaneously for at least the required pasteurization time as defined in Definition P of this *Ordinance.* The control system shall also be set and sealed so that forward flow cannot continue when the temperature of the product in the holding tube is below the

required pasteurization temperature. The seal shall be applied by the regulatory agency after the equipment has been tested, and shall not be removed without immediately notifying the regulatory agency. The system shall be so designed that no product can be bypassed around the control sensor, which shall not be removed from their proper position during the pasteurization process. For these HHST systems, daily measurement by the operator of the cut in and cut out temperatures is not required.

(3.) Manual switches for the control of pumps, homogenizers, or other devices which produce flow through the holder, shall be wired so that the circuit is completed only when the product is above the required pasteurization temperature as defined in Definition P of this *Ordinance* for the milk, milk product, whey, condensed milk products and condensed whey and the process used, or when the diversion device is in the fully-diverted position.

d. Holding tube.--(1.) Holders shall be designed to provide for the holding of every particle of product for at least the time required in Definition P of this *Ordinance* for the milk, milk product, whey, condensed milk products and condensed whey and the process used.

(2) The holder shall be so designed that the simultaneous temperature difference between the hottest and coldest product in any cross section of flow at any time during the holding period will not be greater than 0.5ºC (1ºF). This requirement may be assumed to have been satisfied without test in tubular holders of 7 inches or smaller diameter which are free of any fittings through which the product may not be thoroughly swept.

(3) No device shall be permitted for short circuiting a portion of the holder to compensate for changes in rate of product flow. Holding tubes shall be installed so that sections of pipe cannot be left out, resulting in a shortened holding time.

(4) The holding tube shall be arranged to have a continuously upward slope in the direction of flow of not less than 0.25-inch per foot.

(5) Supports for tubes shall be provided to maintain all parts of holding tubes in a fixed position, free from any lateral or vertical movement.

(6) The holder shall be so designed that no portion between the inlet and the flow-control temperature sensor is heated.

(7) The holding time for the HHST processes must be determined from the pumping rate rather than by the salt conductivity test, because of the short holding tube. The holding tube length must be such that the fastest flowing particle of any product will not traverse the holding tube in less than the required holding time. Since laminar flow (the fastest flowing particle) can occur in the holding tube during pasteurization of high-viscosity products, holding tube lengths are calculated as twice the length required to hold the average flow for the time standard.

(8) With the steam injection processes, the holding tube time is reduced because the product volume increases as the steam condenses to water during the heating in the injector. This surplus water is evaporated as the pasteurized product is cooled in the vacuum chamber. For example, with a 66ºC (120ºF) increase by steam injection, which is probably the maximum temperature rise that will be used, a volume increase of 12 percent will occur in the holding tube. The measurement of the average flow rate, at the discharge of the pasteurizer, does not reflect this volume increase in the holding tube. However, this volume increase, i.e., holding

time decrease, must be considered in the calculations.

(9) With the steam injection process a pressure limit indicator is needed in the holding tube to keep the heated product in the liquid phase. The instrument must have a pressure switch so that the flow diversion device will move to the divert position if the product pressure falls below a prescribed value. For operating temperatures between 89°C (191°F) and 100°C (212°F) the pressure switch must be set at 69 kPa (10 pounds per square inch) (psi). For units which have operating temperatures above 100°C (212°F) the pressure switch must be set at a pressure 69 kPa (10psi) above the boiling pressure of the product at its maximum temperature in the holding tube.

(10) With the steam injection process, a differential pressure limit indicator across the injector is needed to ensure adequate isolation of the injection chamber. The instrument must have a differential pressure switch so that the flow diversion device will move to the divert position if the pressure drop across the injector falls below 69kPa (10psi).

e. Indicating and recording thermometers.-- (1) An indicating thermometer shall be located as near as practicable to the temperature sensor of the recorder controller, but may be located a short distance upstream from the latter, where product between the two thermometers does not differ significantly in temperature.

(2) The temperature shown by the recorder controller shall be checked daily by the plant operator against the temperature shown by the indicating thermometer. Readings shall be recorded on the chart. The recorder controller shall be adjusted to read no higher than the indicating thermometer.

(3) The recorder controller charts shall comply with the applicable provisions of Item 16p(C).

f. Flow-promoting devices.--

(1) The pump, or pumps, and other equipment which may produce flow through the holder shall be located upstream from the holder, provided that pumps and other flow-promoting devices may be located downstream from the holder if means are provided to eliminate negative pressure between the holder and the inlet to such equipment. When vacuum equipment is located downstream from the holder, an effective vacuum breaker, plus an automatic means of preventing a negative pressure in the line between the flow diversion device and the vacuum chamber, shall be acceptable.

(2) The speed of pumps or other flow promoting devices governing the rate of flow through the holder shall be so controlled as to insure the holding of every particle of product for at least the time required as defined in Definition P of this *Ordinance*, for the product and the process used. In all cases, the motor shall be connected to the metering pump by means of a common drive shaft, or by means of gears, pulleys, or a variable speed drive, with the gear box, the pulley box, or the setting of the variable speed protected in such a manner that the holding time cannot be shortened without detection by the regulatory agency. This shall be accomplished by the application of a suitable seal(s) after tests by the regulatory agency and such seal shall not be broken without immediately notifying the regulatory agency. The provision shall apply to all homogenizers used as timing pumps. Variable speed drives used in connection with the metering pump shall be so constructed that wearing or stretching of the belt results in a slowdown, rather than a speedup, of the pump. The metering or timing pump shall be of the

positive displacement type or shall comply with the specifications for magnetic flow meter systems as outlined in Appendix L of this *Ordinance.* Timing pumps and homogenizers, when used as a timing pump, shall not have by-pass line connected from their outlet pipelines to their inlet pipelines during processing if an additional flow promoting or vacuum producing device is located within the system. When a homogenizer is used in conjunction with a timing pump it shall be either:

(i) of larger capacity than the timing pump in which case an unrestricted open recirculation line shall be used to connect the outlet pipeline from the homogenizer to its inlet line. The recirculation line must be of at least the same or larger diameter than the inlet pipeline feeding product to the homogenizer. A check valve, allowing flow from the outlet line to the inlet line, may be used in the recirculating line provided it is of the type which provides a cross-sectional area at least as large as the recirculating line.

(ii) of smaller capacity than the timing pump. In which case a relief line and valve shall be used. Such relief line shall be located after the timing pump and before the inlet to the homogenizer and shall return product to the balance tank, upstream of any booster pump or other flow promoting device.

For those systems which do not homogenize all products and wish to utilize a by-pass line to by pass the homogenizer while processing such product; the by-pass line must be connected with valves which are so designed that both lines cannot be open at the same time. This may be accomplished with 3-way plug valves with properly designed and operating pins or other automatic, fail-safe valves which accomplish the same objective.

(3.) The holding time shall be taken to mean the flow time of the fastest particle of product, at or above the required pasteurization temperature as defined in Definition P of this *Ordinance* for the product and the process used, throughout the holder section; i.e., that portion of the system that is outside of the influence of the heating medium, and slopes continuously upward in the downstream direction, and is located upstream from the flow diversion device. Tests for holding time shall be made when all equipment and devices are operated and adjusted to provide for maximum flow. When a homogenizer is located upstream from the holder, the holding time shall be determined with the homogenizer in operation with no pressure on the homogenizer valves. Where by-pass lines are provided, either upstream or downstream from the metering pump, the holding time shall be tested with both the regular and by-pass line open, unless the by-pass valve is so designed that both lines cannot be open at the same time. The holding time shall be tested during both forward and diverted flow. If necessary to lengthen the holding time during diverted flow, an identifiable restriction may be placed in the vertical portion of the diversion pipeline. When vacuum equipment is located downstream from the holder, the holding time shall be tested with the metering pump operating at maximum flow, and the vacuum equipment adjusted to provide for the maximum vacuum. The holding time shall be tested in both forward and diverted flow by the regulatory agency initially, semiannually thereafter, after any alteration or replacement that may affect the holding time, and whenever the seal of the speed setting has been broken.

g. **Heating by Direct Addition of Steam.--**Steam injection is an inherently un-stable process; accordingly, when steam is injected into a fluid, condensation of the steam

may not be completed inside the injector unless the proper design criteria are used. Lack of complete condensation inside the injector would cause temperature variations in the holding tube that could lead to some product particles being processed below pasteurization temperature. When culinary steam is introduced directly into milk or milk products, as the means of terminal heating to achieve pasteurization temperature, the steam injector shall be designed, installed and operated to comply with the following or equally satisfactory specifications:

(1) The product and steam flows must be isolated from pressure fluctuations inside the injection chamber. One method of isolation is to insert supplementary orifices on the product inlet and the heated product outlet of each injector. The two supplementary orifices must be sized for at least a 69 kPa (10 psi) product pressure drop across the injector during a simulation of normal operations. Excessive vibrations, pressure fluctuations or erratic noise levels indicate an unstable steam injection system and a need to check the isolation of the injection chamber.

(2) The product pressure in the holding tube must be of sufficient magnitude to condense the steam and keep the heated product in the liquid phase. If this pressure is too low, the resultant vaporization in the holding tube will substantially reduce residence times. A minimum product pressure in the holding tube of 69 kPa (10 psi) for operating temperatures from 89°C (191°F) through 100°C (212°F) is satisfactory. For units which have operating temperatures above 100°C (212°F), the pressure of the product in the holding tube must be at least 69 kPa (10 psi) above the boiling pressure of the product at its maximum temperature in the holding tube.

(3) The process should be as free as possible of non-condensable gases that may evolve from the product or be carried in the steam supply. Any two-phase flow caused by the non-condensable gases would displace the product in the holding tube, resulting in reduced residence times. In addition, these gases in the steam supply may also markedly alter the condensation mechanism at the point of injection. Accordingly, the steam boiler shall be supplied with a de-aerator. The de-aerator will aid in keeping the product in the holding tube as free as possible of non-condensable gases.

h. **Prevention of Product Adulteration With Added Water.--**

(1) When culinary steam is introduced directly into the milk or milk product downstream from the flow diversion device, means shall be provided to preclude the addition of steam to the product, unless the flow diversion device is in the forward flow position. This provision may be satisfied by the use of an automatic steam control valve with a temperature sensor located downstream from the steam inlet, or by the use of an automatic solenoid valve installed in the steam line and so wired through the flow diversion device controls, so that steam cannot flow unless the flow diversion device is in the forward flow position.

(2) When culinary steam is introduced directly into the milk or milk product, automatic means (eg., stand-alone and/or PLC-based ratio control system) shall be provided to maintain a proper temperature differential between incoming and outgoing milk to preclude dilution with water.

(3) Where a water feed line is connected to a vacuum condenser and the vacuum condenser is not separated from the vacuum chamber by a physical barrier, means

shall be provided to preclude the backup and overflow of water from the vacuum condenser to the vacuum chamber. This provision may be satisfied by the use of a safety shutoff valve, located on the water feed line to the vacuum condenser, which is automatically actuated by a control which will shut off the in flowing water, if for example, the condensate pump stops and the water level rises above a predetermined point in the vacuum condenser. This valve may be actuated by water, air or electricity and shall be so designed that failure of the primary motivating power will automatically stop the flow of water into the vacuum condenser.

ITEM 16p(B). PASTEURIZERS EMPLOYING PRODUCT-TO-PRODUCT REGENERATIVE HEATING

PUBLIC HEALTH REASON.-- To prevent contamination of the pasteurized milk in regenerators, the raw milk must always be under less pressure than the pasteurized milk or the heat-transfer medium. In the case of milk-to-milk regenerators, this requirement is necessary to prevent contamination of the pasteurized product by the raw milk if flaws should develop in the metal or in the joints separating the two kinds of milk.

ADMINISTRATIVE PROCEDURES

Milk-to-Milk Regenerative Heating

Pasteurizers and aseptic processing systems employing milk-to-milk regenerative heating with both sides closed to the atmosphere shall comply with the following or equally satisfactory specifications:

1. Regenerators shall be constructed, installed and operated so that pasteurized or aseptic product in the regenerator will automatically be under greater pressure than raw milk in the regenerator at all times.

2. The pasteurized or aseptic product, between its outlet from the regenerator and the nearest point downstream open to the atmosphere, shall rise to a vertical elevation of 30.48 centimeter (12 inches) above the highest raw milk level, downstream from the constant level tank, and shall be open to the atmosphere at this or a higher elevation.

3. The overflow of the top rim of the constant level raw milk tank shall always be lower than the lowest milk level in the regenerator.

4. No pump or flow promoting device which can affect the proper pressure relationships within the regenerator shall be located between the pasteurized or aseptic product outlet from the regenerator and the nearest downstream point open to the atmosphere.

5. No pump shall be located between the raw milk inlet to the regenerator and the raw milk supply tank, unless it is designed and installed to operate only when milk is flowing through the pasteurized or aseptic product side of the regenerator and when the pressure of the pasteurized or aseptic product is higher than the maximum pressure produced by the pump. This may be accomplished by wiring the booster pump so that it cannot operate unless:

a. The metering pump is in operation;

b. The flow diversion device is in forward flow position; and

c. The pasteurized or aseptic product pressure exceeds, by at least 6.9 kPa (1 psi), the maximum pressure developed by the booster pump. Pressure gauges shall be installed at the raw milk inlet to the regenerator and the pasteurized or aseptic product outlet of the regenerator or the outlet of the cooler. The accuracy of these required pressure gauges shall be checked, by the regulatory agency, on installation; quarterly thereafter; and following repair or adjustment.

6. The motor, casing and impeller of the booster pump shall be identified, and such records maintained as directed by the regulatory agency. All electric wiring interconnections should be in permanent conduit (except that rubber covered cable may be used for final connections), with no electrical connections to defeat the purpose of any provisions of this *Ordinance*.

7. All raw milk in the regenerator will drain freely back into the constant-level raw milk tank when the raw milk pump(s) are shut down and the raw milk outlet from the regenerator is disconnected.

8. When vacuum equipment is located downstream from the flow diversion device, means shall be provided to prevent the lowering of the pasteurized or aseptic product level in the regenerator during periods of diverted flow or shutdown. An effective vacuum breaker, plus an automatic means of preventing a negative pressure, shall be installed in the line between the vacuum chamber and the pasteurized or aseptic product inlet to the regenerator.

9. In the case of HHST pasteurization systems utilizing the temperatures of 89ºC (191ºF) and above and holding times of 1 second or less, with the flow diversion device located downstream from the regenerator and/or cooler section, the requirement that the pasteurized product from the outlet of the regenerator or cooler shall rise to a vertical elevation of 30.5 centimeters (12 inches) above the highest raw product level downstream from the constant level tank and shall be open to the atmosphere at this or a higher elevation, may be eliminated. *Provided*, that a differential pressure controller is used to monitor the highest pressure in the raw product side of the regenerator and the lowest pressure in the pasteurized side of the regenerator, and the controller is interlocked with the flow diversion device and is set and sealed so that whenever improper pressures occur in the regenerator, forward flow of product is automatically prevented and will not start again until all product contact surfaces between the holding tube and flow diversion device have been held at or above the required pasteurization temperature, continuously and simultaneously for at least the required pasteurization time as defined in Definition P of this *Ordinance*.

In the case of aseptic processing systems used for producing aseptic milk and milk products, there shall be an accurate differential pressure recorder controller installed on the regenerator. The scale divisions shall not exceed 13.8 kPa (2 pounds per square inch) on the working scale of not more than 138 kPa (20 pounds per square inch) per 25.4 millimeter (inch). The controller shall be tested for accuracy against a known accurate standard pressure indicator upon installation; at least once every 3 months of operation thereafter; or more frequently if necessary, to ensure its accuracy. One pressure sensor shall be installed at the aseptic product regenerator outlet and the other pressure sensor shall be installed at the raw product regenerator inlet.

10. When culinary steam is introduced directly into milk or milk products, as

the means of terminal heating to achieve pasteurization or aseptic processing temperature, and vacuum equipment is located downstream from the holding tube, the requirement that a vacuum breaker be installed at the inlet to the pasteurized or aseptic side of the regenerator may be eliminated. *Provided*, that the differential pressure controller is installed and wired to control the flow diversion device as described in paragraph 9 of this section.

11. When the differential pressure controller is installed and wired to control the flow diversion device as described in paragraph 9 of this section, the raw product booster pump may be permitted to run at all times. *Provided*, that the metering pump is in operation.

Note.--See Appendix H, of the *Grade A Pasteurized Milk Ordinance--1995 Recommendations of the United States Public Health Service/Food and Drug Administration*, for further discussion concerning methods of achieving the required pressure relationships within the regenerator.

ITEM 16p(C)
TEMPERATURE RECORDING CHARTS EQUIPMENT TESTS AND EXAMINATIONS

ADMINISTRATIVE PROCEDURES

1. Temperature Recording Charts.--All temperature recording charts shall be preserved for a period of 3 months. The use of such charts shall not exceed the time limit for which they are designed. Overlapping of recorded data shall be a violation of this item. The following information shall be entered on the charts as applicable:

a. Date.

b. Number or location of recorder when more than one is used.

c. Reading of indicating thermometer within the holding period at a given time or reference point as indicated on the chart (Item 16p(A)).

d. Quarterly, the initials of the regulatory agency opposite the required readings of the indicating thermometer.

e. Quarterly, the time accuracy of the recorder, as determined by the regulatory agency (Appendix F, Test 3, p. 114).

f. Amount and name of pasteurized product represented by each batch or run on the chart.

g. Record of unusual occurrences.

h. Signature or initials of operator.

i. Name of plant.

j. A record of the time during which the flow diversion device is in the forward flow position.

k. The cut-in and cut-out product temperatures recorded daily by the operator at the beginning of the run and initialed quarterly by the regulatory agency (Item 16p(A).

Note.--The recorded temperature shown on the controller chart shall be used to determine that the required temperature for products containing sweeteners has been achieved.

2. Equipment Tests and Examinations.-The regulatory agency shall perform the indicated tests on the following instruments and devices initially on installation, and at least once each 3 months and the remaining days of the month in which the equipment tests are due thereafter, and whenever any alteration or replacement is made which may affect the proper operation of the instrument or device. *Provided*, That the holding time test shall be conducted at least once every 6 months and the remaining days of the month in which the equipment check is due. On an emergency basis, pasteurization equipment may be tested and temporarily sealed by a dairy plant employee provided the following conditions are met:

a. The individual applying the seal(s) is employed in a supervisory capacity by the plant in which the seal was removed; and

b. The individual has satisfactorily completed a course of instruction, acceptable to the regulatory agency, on test controls for pasteurization equipment that includes a minimum of 8 hours classroom instruction; and

c. The individual has demonstrated the ability to satisfactorily conduct all pasteurization control tests, in the presence of a regulatory official, within the past year; and

d. The individual is in possession of authorization from the regulatory agency to perform these tests; and

e. The individual will immediately notify the regulatory agency of the time of the shutdown that would necessitate the removal of the regulatory seals. Permission to test (and seal) the equipment must be obtained for each specific incident. The individual will also notify the regulatory agency of the identity of the controls affected, the cause (if known) of the equipment failure, the repairs made and the result of testing (when completed). The individual will provide the identity and volume of products processed during the period that temporary seals were applied to the regulatory agency; and

f. If regulatory tests reveal that equipment or controls are not in compliance with the provisions of this document, all products that were processed during that period will be recalled; and

g. The regulatory agency will remove the temporary seals, retest the equipment and apply regulatory seals within 3 working days of notification by industry; and

h. No Grade A dairy products will be processed after three working days without the affected equipment being tested and sealed by the regulatory agency.

Table 3. EQUIPMENT TESTS--BATCH, HTST, HHST AND AP SYSTEMS		
Instrument or Device	Test #	Test Objective
Batch pasteurizer indicating and airspace thermometer	1	Accuracy
Batch pasteurizer recording thermometer	2	Temperature accuracy
Batch pasteurizer recording thermometer	3	Time accuracy
Batch Pasteurizer recording thermometer	4	Recording thermometer vs. indicating thermometer
Batch pasteurizer valves	6	Leakage in plug type leak-protector valves
HTST, HHST & AP indicating thermometer	1	Accuracy
HTST, HHST & AP recording thermometer	2	Temperature accuracy
HTST, HHST & AP recording thermometer	3	Time accuracy
HTST, HHST & AP recorder controller	4	Recorder controller vs. Indicating thermometer
HTST, HHST & AP flow diversion device	5	Assembly and function
HTST indicating thermometer*	7	Thermometric response
HTST recorder controller*	8	Thermometric response
HTST, HHST & AP auxiliary (booster) pump**	9	Regenerator pressures (for HHST and AP only part 4 applies)
HTST, HHST & AP recorder controller**	10	Confirm cut-in and cut-out temperatures (for HHST and AP systems only parts 2 or 3 apply)
HTST timing*,***	11 (parts 1 or 2)	Check holding time
HTST timing	11 (parts 3 or 4)	Check holding time
HTST & AP system**	12	Thermal limit control for sequence logic
HTST & AP system**	13	Switches for product pressure in holding tube
HTST & AP system**	14	Switches for differential pressure across the injector

* Does not apply to HHST or AP Systems
** In aseptic systems a diversion of a single product control valve or activation of another accepted control may be substituted for diversion of the FDD.
*** Tests 2b, 2c and 2d may be applied to HHST and AP systems as needed.

ITEM 17p.
COOLING OF MILK, MILK PRODUCTS, WHEY, WHEY PRODUCTS, CONDENSED MILK PRODUCTS AND CONDENSED WHEY

All raw milk and milk products shall be maintained at 7ºC (45ºF) or less until processed. All whey and whey products for condensing shall be maintained at a temperature of 7ºC (45ºF) or less; or 63ºC (145ºF) or greater until processed, except that acid-type whey with a titratable acidity of 0.40% or above, or a pH of 4.6 or below, is exempted from these temperature requirements. All pasteurized milk and milk products, pasteurized whey and whey products, and condensed milk products shall be cooled immediately in approved equipment to a temperature of 7ºC (45ºF) or less, unless drying is commenced immediately after condensing. All condensed whey shall be cooled during the crystallization process to 7ºC (45ºF) or less within 18 hours of condensing. All pasteurized milk and milk products, pasteurized whey and whey products, and condensed milk products shall be stored at a temperature of 7ºC (45ºF) or less and maintained thereat until further processed. Every room or tank in which milk, milk products, whey, whey products, condensed milk products and condensed whey are stored shall be equipped with an accurate thermometer.

Public-Health Reason.--When milk is not cooled within a reasonable time after it is received at the pasteurization plant, its bacterial content will be materially increased. The same reasoning applies to cooling the milk and milk products after pasteurization.

ADMINISTRATIVE PROCEDURES

This item is deemed to be satisfied when;

1. All raw milk and milk products are maintained at 7ºC (45ºF) or less until processed except that acid-type whey with a titratable acidity of 0.40% or above, or a pH of 4.6 or below, is exempted from these temperature requirements.

2. All whey for condensing is maintained at a temperature of 7ºC (45ºF) or less; or 63ºC (145ºF) or greater until processed unless surge tanks are used; and emptied, cleaned and sanitized after each 4 hours of use or less..

3. All pasteurized milk and milk products, pasteurized whey and condensed milk products, except those to be dried immediately, are cooled immediately in approved equipment to a temperature of 7ºC (45ºF) or less. All pasteurized milk and milk products, pasteurized whey and condensed milk products shall be stored at a temperature of 7ºC (45ºF) or less and be maintained thereat until further processing. If surge tanks or balance tanks are used between the evaporator and the drier, such tanks shall hold the product at a temperature of 66ºC (150ºF) or more, or shall be completely emptied and cleaned after each 4 hours of operation or less.

4. All condensed whey is cooled during the crystallization process to 7ºC (45ºF) or less, within 18 hours of condensing.

5. Each refrigerator room in which milk, milk products or whey are stored is equipped with an indicating thermometer which complies with the applicable specifications of Appendix E, p. 107. Such thermometer shall be located in the warmest zone of the refrigerator room.

Each storage tank shall be equipped with an indicating thermometer, the sensor of

which shall be located to permit the registering of the temperature of the contents when the tank contains no more than 20 percent of its calibrated capacity. Such thermometer shall comply with the applicable specifications of Appendix E, page 107.

6. All surface coolers comply with the following specifications:

a. The sections of open-surface coolers shall be so installed as to leave a gap of at least 6.4 millimeters (0.25 inch) between the header sections to permit easy cleaning.

b. Where header ends are not completely enclosed within the cooler covers, condensation or leakage from the headers shall be prevented from entering the product by so shaping the exposed header faces, above and below all gaps, that condensation is directed away from the tubes, and by using deflectors at the bottom of the headers, or by shortening the bottom trough, or by some other approved method.

c. The location of supports of cooler sections shall prevent drip from entering the milk, milk products, whey, condensed milk products, and condensed whey.

d. All open surface coolers shall be provided with tight-fitting shields which protect the product from contamination by flies, dust, drip, splash, or manual contact.

7. Recirculated cold water which is used in coolers and exchangers, including those systems in which a freezing point depressant is used, is from a safe source and protected from contamination. Such water shall be tested semiannually and shall comply with the bacteriological standards of Appendix G, of the *Grade A Pasteurized Milk Ordinance--1995 Recommendations of the United States Public Health Service/Food and Drug Administration*. Recirculated water systems which become contaminated through repair work or otherwise shall be properly treated and tested before being returned to use. Freezing point depressants, when used in recirculating systems, shall be nontoxic.

ITEM 18p.
PACKAGING AND CONTAINER FILLING

The filling of condensed and dry milk product containers shall be done only by mechanical equipment and by methods which preclude contamination. Dry milk products, dry whey, and dry whey products shall be packaged in new containers which protect the contents from contamination, and after packaging, shall be stored in a sanitary manner. Condensed and dry milk products may be transported in sealed containers in a sanitary manner from one plant to another for further processing and/or packaging. Condensed and dry milk product packaging containers shall be stored in a sanitary manner.

Public-Health Reason.--Manual packaging of products is very apt to result in the exposure of the products to contamination which would nullify the effects of pasteurization. Reuse of containers or packages for dry products is likely to result in contamination of dry products.

ADMINISTRATIVE PROCEDURES

This item is deemed to be satisfied when:

1. The filling of condensed and dry milk product containers is done by mechanical equipment. The term "mechanical equipment" shall not be interpreted to exclude manually operated equipment.

2. All pipes, connections, and similar appurtenances comply with Items 10p and 11p.

3. Filling devices are constructed so as to prevent any contamination from reaching the product. Covers of filling devices, if used, shall be in place during operation.

4. Packaged dry milk products and dry whey are stored and arranged so as to be easily accessible for inspection and to permit cleaning of the storage room.

5. All condensed and dry milk product containers are filled in a sanitary manner by methods which:

a. Protect the product from airborne contamination;

b. Prevent manual contact with product-contact surfaces; and

c. Minimize manual contact with the product.

6. All final containers for dry milk products and dry whey shall be new and of the single-service type and sufficiently substantial to protect contents from impairment of quality with respect to sanitation, contamination and moisture under customary conditions of handling, transportation, and storage.

7. If portable storage bins are used, they comply with the applicable provisions of Items 10p and 11p.

8. Containers are closed immediately after being filled.

ITEM 19p.
CONTAINER CLOSURE, SEALING AND STORAGE

Closing or sealing of dry milk product and dry whey and dry whey product containers shall be done in a sanitary manner. The closing and/or sealing of individual containers of condensed milk products and condensed whey and whey products shall be done by methods which preclude product contamination.

Public Health Reason.--Improper closing or sealing exposes the product to contamination.

ADMINISTRATIVE PROCEDURES

This item is deemed to be satisfied when:

1. The closing or sealing of dry milk product and dry whey containers is done in a sanitary manner by mechanical closing and/or sealing equipment. The term "mechanical closing and/or sealing equipment" shall not exclude manually operated equipment.

2. All mechanical closing or sealing mechanisms are designed to minimize the need for adjustment during operation.

3. The closing or sealing of condensed milk product and condensed whey containers is done in a sanitary manner and prevents product contamination.

4. All products are stored in a sanitary manner.

ITEM 20p.
PERSONNEL--CLEANLINESS

Hands shall be thoroughly washed before commencing plant functions and as

often as may be required to remove soil and contamination. No employee shall resume work after visiting the toilet room without thoroughly washing his hands. All persons, while engaged in the processing, pasteurization, handling, storage, transportation or packaging of milk, milk products, whey, whey products, condensed and dry milk products, containers, equipment, and utensils shall wear clean outer garments. All persons, while engaged in the processing of milk, milk products, whey, condensed and dry milk products, shall wear adequate head coverings and shall not use tobacco.

Public Health Reason.--Clean clothing and clean hands (including clean fingernails) reduce the possibility of products, containers, and equipment becoming contaminated.

ADMINISTRATIVE PROCEDURES

This item is deemed to be satisfied when:

1. Hands are thoroughly washed before commencing plant functions and as often as may be required to remove soil and contamination.

2. Each employee washes his hands following a visit to the toilet room and prior to resuming work.

3. All persons while engaged in the processing, pasteurization, handling, storage, transportation, or packaging of milk, milk products, whey, condensed and dry milk products, containers, equipment, and utensils wear clean outer garments.

4. Tobacco is not used by any person while engaged in the processing of milk, milk products, whey or condensed and dry milk products and adequate head coverings are worn.

5. Specially provided clean rubbers or boot covers, clean coveralls, and white cap (clean cloth or paper) are worn whenever it is necessary to enter the drying chambers. Such articles of clothing are stored in such manner as to be protected from contamination. Boot covers which have come into contact with areas other than those within the dryer, are not considered clean.

ITEM 21p. VEHICLES

All vehicles used for transportation of milk, milk products, whey, whey products, condensed milk products and condensed whey shall be constructed and operated so that the milk, milk products, whey, whey products, condensed milk products and condensed whey are maintained at 7ºC (45ºF) or less, and are protected from sun, from freezing and from contamination. Milk tank cars, milk tank trucks, and portable shipping bins shall not be used to transport or contain any substances that may be toxic or harmful to humans. Dry milk products and dry whey and whey products shall be transported in a sanitary manner.

Public Health Reason.--The exposure of milk to the sun will alter the flavor of milk, and will tend to increase the temperature, thus increasing the possibility of bacterial growth. Freezing alters the physical and chemical properties of milk. Milk, milk products, whey, condensed and dry milk products as well as empty containers, should be protected against contamination at all times.

ADMINISTRATIVE PROCEDURES

This item is deemed to be satisfied when:

1. All vehicles are kept clean.

2. Contaminating materials are not transported with milk, milk products, whey, condensed milk products or condensed whey.

3. Milk, milk products, whey, condensed milk products, and condensed whey are maintained at 7°C (45°F) or less, and protected from sun, freezing and contamination.

4. The operation of milk tank cars, tank trucks, and shipping bins comply to the following provisions:

a. Milk and milk products, whey, condensed milk products and condensed whey shall be conducted to and from tanks or storage bins only through sanitary conveying equipment. Such equipment shall be capped or otherwise protected when not in use.

b. Inlets and outlets of milk tank trucks and bins shall be provided with tight-fitting dust caps or covers.

c. Facilities shall be provided for adequate washing and sanitizing of milk tank trucks, bins, piping, and accessories at all plants receiving or shipping milk, milk products, whey, condensed milk products or condensed whey in milk tank trucks or bins.

d. Milk tank trucks and/or compartments thereof and shipping bins shall be cleaned at the receiving plant immediately after being emptied. The clean milk tank trucks or bins shall be sanitized at the shipping plant before loading. Tank trucks which must make more than one trip while unloading a tank car need not be cleaned and sanitized after each time they are emptied.

e. Piping connections and pumps used with milk tank trucks and/or bins shall be cleaned and sanitized after each use.

5. The covers of all openings of milk tank trucks, the doors of tank cars, and covers of bins are sealed with a metal seal immediately after loading. The seal shall remain unbroken until the contents are delivered to the consignee. Contents of the milk tank truck or bin shall be labeled as prescribed in Section 4 by means of a tag attached to the outlet.

ITEM 22p. SURROUNDINGS

Milk condensing and/or drying plant and whey condensing and/or drying plant surroundings shall be kept neat, clean, and free from conditions which might attract or harbor flies, other insects and rodents, or which otherwise constitute a nuisance.

Public-Health Reason.--The surroundings of a condensing and/or drying plant should be kept neat and clean to prevent attracting rodents, flies, and other insects, which may contaminate the products. Insecticides and rodenticides not approved for use in condensing and/or drying plants or approved insecticides and rodenticides not used in accordance with label recommendations may contaminate the product processed by the condensing and/or drying plant.

ADMINISTRATIVE PROCEDURES

This item is deemed to be satisfied when:

1. There is no accumulation of trash, garbage, or similar waste in areas adjacent to the plant. Waste material stored in suitable covered containers shall be considered in compliance.

2. Rooftops are kept clean of dry milk or whey products which may accumulate and contribute to insanitary conditions.

3. Driveways, lanes, and areas serving the plant vehicular traffic are graded,

drained, and free from pools of standing water.

4. Outdoor areas for milk tank trucks unloading are constructed of smooth concrete or equally impervious material, properly sloped to drain, and equipped with trapped drains of sufficient size.

5. Only insecticides and rodenticides approved for use by the regulatory agency and/or registered with the U.S. Environmental Protection Agency shall be used for insect and rodent control.

SECTION 8. CONDENSED AND DRY MILK PRODUCTS AND CONDENSED AND DRY WHEY FROM POINTS BEYOND LIMITS OF ROUTINE INSPECTION

Condensed and dry milk products and condensed and dry whey from points beyond the limits of routine inspection of the.... of....[1] or its jurisdiction, may be sold in...[1] or its jurisdiction for use in the commercial preparation of Grade A pasteurized milk products provided they are produced and processed under regulations which are substantially equivalent to this *Ordinance* and have been awarded an acceptable milk sanitation compliance and enforcement rating made by a State Milk Sanitation Rating Officer certified by the Food and Drug Administration.

ADMINISTRATIVE PROCEDURES

The regulatory agency should accept, without its actual physical inspection, supplies of condensed and dry milk products from an area or an individual shipper not under their routine inspection. *Provided*, That;

1. Upon receipt, condensed and dry milk products shall comply with the applicable bacteriological, chemical, and temperature requirements of Section 7;

2. The condensed and dry milk products are produced and processed under regulations substantially equivalent to those of this *Ordinance*;

3. The supplies are under routine official supervision;

4. The supplies have been awarded by the State milk sanitation rating officer certified by the Food and Drug Administration, a milk sanitation compliance and enforcement rating equal to that of the local supply or equal to 90 percent or higher; and

5. All ratings are made on the basis of procedures outlined in *Methods of Making Sanitation Ratings of Milk Supplies, 1995 Recommendations of the United States Public Health Service/ Food and Drug Administration*.

SECTION 9. FUTURE CONDENSING PLANTS AND DRYING PLANTS

Properly prepared plans for all condensing plants and drying plants regulated under this *Ordinance* which are hereafter constructed, reconstructed, or extensively altered, shall be submitted to the regulatory agency for written approval before the work is begun.

Note.--The regulatory agency should give prompt consideration to these plans and to providing written approval within 60 days following their submission.

SECTION 10.
PERSONNEL HEALTH

No person affected with any disease capable of being transmitted to others through the contamination of food shall work at any condensing or drying plant in any capacity which brings them into direct contact with finished products such as condensed and dry milk products, or which brings them into direct contact with associated finished product contact surfaces.

ADMINISTRATIVE PROCEDURES

Milk plant operators who have received reports, under this section, from employees who have handled pasteurized milk, pasteurized milk products or associated product contact surfaces shall immediately report these facts to the appropriate milk regulatory agency.

Dairy plant employees (or applicants to become employees) shall be instructed by the dairy plant that the employee or applicant is responsible to report to the dairy plant management, in a manner that allows the dairy plant to prevent the likelihood of disease transmission of diseases that are transmissible through foods, if the employee or applicant:

1. Is diagnosed with an illness due to Hepatitis A virus, Salmonella typhi, Shigella species, Norwalk and Norwalk-like Viruses, Staphylococcus aureus, Streptococcus pyogenes, Escherichia coli 0157:H7, enterohemorrhagic Escherichia coli, enterotoxigenic Escherichia coli, Campylobacter jejuni, Entamoeba histolytica, Giardia lamblia, Non-typhoidal Salmonella, Rotovirus, Taenia solium, Yersinia enterocolitica, Vibrio cholerae O1 or other infectious or communicable disease that has been declared by the Secretary of Health and Human Services to be transmissible to others through the handling of food, or has been clearly shown to be so based upon verifiable epidemiological data; or

2. Is exposed to, or suspected of causing, a confirmed foodborne disease outbreak of one of the diseases specified in number (1) above, including an outbreak at an event such as a family meal, church supper or ethnic festival because the applicant or employee:

a. Prepared food implicated in the outbreak, or

b. Consumed food implicated in the outbreak, or

c. Consumed food at the event prepared by a person who is infected or ill.

3. Lives in the same household as a person who attends or works in a day care center or school, similar institution experiencing a confirmed outbreak of one of the diseases specified in number (1) above.

Similarly, dairy plant employees shall be instructed by the dairy plant management to report to the dairy plant management if the employee (or applicant):

4. Has a symptom associated with acute gastrointestinal illness such as: abdominal cramps or discomfort, diarrhea, fever, loss of appetite for three or more days, vomiting, jaundice, or

5. Has a pustular lesion such as a boil or infected wound that is:

a. On the hands, wrists or exposed portions of the arms, unless the lesion is covered by a durable, moisture proof, tight-fitting barrier, or

b. On other parts of the body if the lesion is open or draining, unless the lesion is covered by a durable, moisture proof, tight-fitting barrier.

SECTION 11.
PROCEDURE WHEN INFECTION OR HIGH RISK OF INFECTION IS DISCOVERED

When a person who may have handled pasteurized condensed and/or dry milk, milk products, whey, and whey products and their associated product contact surfaces meets one or more of the conditions specified in the Administrative Procedure of Section 10, the regulatory agency is authorized to require any or all of the following measures:

1. The immediate restricting of that person from duties which require handling finished product, such as pasteurized milk or milk products or the handling of related product contact surfaces. This restriction may be lifted after an appropriate medical clearance or cessation of symptoms or both, according to the following criteria:

Table 2 **Removal of Restrictions When Infection or** **High Risk of Infection is Discovered**	
Health Status	Removing Restrictions
a. Is diagnosed with an illness due to Hepatitis A virus, Salmonella typhi, Shigella species, Norwalk and Norwalk-like Viruses, Staphylococcus aureus, Streptococcus pyogenes, Escherichia coli 0157:H7, enterohemorrhagic Escherichia coli, enterotoxigenic Escherichia coli, Campylobactor jejuni, Entamoeba histolytica, Giardia lamblia, Non-typhoidal Salmonella, Rotovirus, Taenia solium, Yersinia enterocolitica, Vibrio cholerae O1 or other infectious or communicable disease that has been declared by the Secretary of Health and Human Services to be transmissible to others through the handling of food or has been clearly shown to be so based upon verifiable epidemiological data.	Restrictions lifted by medical clearance.
b. Meeting a high risk scenario as specified in Section 10 (2 or 3) and/or experiencing symptoms in Section 10 (4, 5 or 6).	Restrictions lifted when symptoms cease or medical documentation is provided that infection does not exist.
c. Asymptomatic, but stools positive for Salmonella typhi, Shigella or Escherichia coli 0157:H7.	Restrictions lifted by medical clearance.
d. Past illness from Salmonella typhi, Shigella, Escherichia coli 0157:H7 or other human pathogens for which humans have been determined to be carriers.	Restrictions lifted by medical clearance.
e. In the case of diagnosed or suspected Hepatitis A, onset of jaundice within the last seven (7) days.	Restrictions lifted by medical clearance.
f. In the case of diagnosed or suspected Hepatitis A, onset of jaundice occurred more than seven (7) days ago.	Restrictions lifted by medical clearance or jaundice ceases.

2. The immediate exclusion of the effected dairy products from distribution and use when medically appropriate (i.e., a medical evaluation of the sequence of events indicates that contamination of product may have occurred).

3. The immediate requesting of medical and bacteriological examination of the person at risk. (Note: Persons at risk who decline to be examined may be reassigned to duties where they will not be required to handle finished products, such as milk, milk products, whey, condensed and dry milk products, and associated product contact surfaces).

SECTION 12. ENFORCEMENT

This *Ordinance* shall be enforced by the regulatory agency in accordance with the administrative procedures of Part II of the *Grade A Condensed and Dry Milk Products and Condensed and Dry Whey--Recommended Sanitation Ordinance for Condensed and Dry Milk Products and Condensed and Dry Whey used in Grade A Pasteurized Milk Products--Supplement I to the Grade A Pasteurized Milk Ordinance--1995 Recommendations of the United States Public Health Service/Food and Drug Administration*, a certified copy of which shall be on file at the office of ...[2] and in conjunction with (cite ordinance adopting the *Grade A Pasteurized Milk Ordinance--1995 Recommendations of the United States Public Health Service/Food and Drug Administration*). Where mandatory compliance with provisions of the appendixes is specified, such provisions shall be deemed a requirement of the *Ordinance*.

SECTION 13. PENALTIES

Any person who shall violate any of the provisions of this *Ordinance* shall be guilty of a misdemeanor, and upon conviction thereof, shall be punished by a fine of not more than $... and/or such persons may be enjoined from continuing such violations. Each day upon which such a violation occurs shall constitute a separate violation.

SECTION 14. REPEAL AND DATE OF EFFECT

All ordinances and parts of ordinances in conflict with this *Ordinance* shall be repealed 12 months after the adoption of this *Ordinance*; at which time, this *Ordinance* shall be in full force and effect, as provided by law.

SECTION 15. SEPARABILITY CLAUSE

Should any section, paragraph, sentence, clause, or phrase of this *Ordinance* be declared unconstitutional or invalid for any reason, the remainder of this *Ordinance* shall not be affected thereby.

FOOTNOTES

In the interest of clarity and to provide easy access to their information, all numbered footnotes have been removed from the body of this publication and are assembled in this section. A numerical reference in the text will always relate to its like numbered footnote in this section.

1. Substitute proper legal jurisdiction here and in all similar places throughout the *Ordinance*.

2. A certified copy may be secured from the Food and Drug Administration, Milk Safety Branch (HFS-626), 200 "C" Street, S.W., Washington, DC 20204.

3. Whey, caseinates, lactalbumin and other milk derived ingredients are required to be derived from a Grade A raw milk source.

Appendixes

A. Standards for Water Sources 85
B. Sanitization 87
I.--Methods of Sanitization 87
II.--Sanitization of Assembled Equipment 90
III.--Sanitizer Strength and Water Hardness Tests 91
C. Air for Drying Equipment and Air Under Pressure--Product Contact Surfaces 93
D. Culinary Steam--Milk, Milk Products and Whey 102
E. Thermometer Specifications 107
F. Pasteurization Equipment and Controls---Tests 111
I.--Testing Apparatus Specifications 111
II.--Test Procedures 112
G. Standards of Identity for Milk, Milk Products, Nonfat Dry Milk, and Federal Food, Drug, and Cosmetic Act Defined 143
H. Evaporating, Drying, and Dry Product Equipment Cleaning 167
I.--Cleaning of Evaporators and Condensers 167
II.--High Pressure Pumps and High Pressure Lines 169
III.--Wet Cleaning of Dryer 169
IV.--Dry Cleaning 170
V.--Auxiliary Dry Product Equipment 172
I. Adoption-by-Reference Form of the *Grade A Condensed and Dry Milk Products and Condensed and Dry Whey--Supplement I to the Grade A Pasteurized Milk Ordinance, 1995 Recommendations* 175
J. Reports and Records 177
K. Chemical and Bacteriological Tests 181
L. Pasteurization and Equipment Procedures 191
M. Reserved 195
N. Drug Residue Monitoring and Farm Surveillance 197
Index 201

APPENDIX A.

STANDARDS FOR WATER SOURCES

WATER RECLAIMED FROM THE CONDENSING OF MILK, MILK PRODUCTS, AND WHEY

Condensing water from milk and whey evaporators and water reclaimed from milk, milk products or whey shall comply with the following requirements:

1. Water shall comply with the bacteriological standards of Appendix G, p. 195, of the *Grade A Pasteurized Milk Ordinance--1995 Recommendations of the United States Public Health Service/Food and Drug Administration*, and in addition shall not exceed a total plate count of 500 per milliliter.

2. Samples shall be collected daily for two weeks following initial approval of the installation and semi-annually thereafter. *Provided*, That daily tests shall be conducted for 1 week following any repairs or alteration to the system.

3. The organic content shall be less than 12 milligrams per liter as measured by the Chemical Oxygen Demand or permanganate consumed test; or a standard turbidity of less than 5 units.

4. Automatic fail-safe monitoring devices shall be used to monitor and automatically divert to the sewer any water which exceeds the standard.

5. The water shall be of satisfactory organoleptic quality and shall have no off-flavors, odors or slime formations.

6. The water shall be sampled and tested organoleptically at weekly intervals.

7. Approved chemicals such as chlorine with a suitable detention period may be used to suppress the development of bacterial growth and prevent the development of tastes and odors.

8. The addition of approved chemicals shall be by an automatic proportioning device prior to the water entering the storage tank to assure satisfactory quality water in the storage tank at all times.

9. When chemicals are added, a daily testing program for such added chemicals shall be in effect and shall not add substances that will prove deleterious to the use of the water or contribute to product contamination.

10. The storage vessel shall be properly constructed of such material that it will not contaminate the water and can be satisfactorily cleaned.

11. The distribution system within a plant for such reclaimed water shall be a separate system with no cross connections to a municipal or private water system.

12. All physical, chemical, and microbiological tests shall be conducted in accordance with the latest edition of *Standard Methods for the Examination of Water and Wastewater*.

Condensing water from milk and whey evaporators and water reclaimed from milk, milk products, or whey may be used for the following limited applications;

1. Pre-rinsing of the product surfaces where pre-rinses will not be used in food products; and
2. Cleaning solution make-up water; provided that for either use, items # 3-11 of this section are satisfied, and:

a. There is no carry-over of water from one day to the next, and any water collected is used promptly; or

The temperature of all water in the storage and distribution system is maintained at 63ºC (145ºF) or higher by automatic means; or

The water is treated with a suitable, approved chemical to suppress bacterial propagation by means of an automatic proportioning device, prior to water entering the storage tank; and that,

b. Distribution lines and hose stations are clearly identified as "limited use reclaimed water"; and

c. Water handling practices and guidelines are clearly described and prominently displayed at appropriate locations within the plant; and

d. These water lines are not permanently connected to product vessels, without a break to the atmosphere and sufficient automatic controls, to prevent the inadvertent addition of this water to product streams.

Recovered water may be used as boiler feedwater for boilers, not used for generating culinary steam, or in a thick, double walled, enclosed heat exchanger.

APPENDIX B.

SANITIZATION

I. METHODS OF SANITIZATION

CHEMICAL

Certain chemical compounds are effective for the sanitization of utensils, containers and equipment. The bactericidal activity of such compounds is influenced by temperature, hydrogen-ion concentration (pH) and, in some instances, by interfering substances in the water in which they are used.

The activity of chemical sanitizers may also be adversely affected by ingredients in washing compounds and organic matter carried over from the wash solution. Consequently, a rinse between washing and bactericidal treatment is important in maintaining the strength of solutions. Similarly, deposits of milk solids on utensil surfaces interfere with bactericidal activity, and chemical sanitizers cannot be relied upon unless the surfaces to be treated are clean.

Temperature, pH and exposure time also influence the corrosive action of the chemical bactericides and sanitizers on materials used for product-contact surfaces of equipment, containers, utensils and pipelines. Minimum treatment, consistent with sanitizing requirements, will aid in preserving the sanitary finish of surfaces.

Hypochlorites.--Either calcium or sodium hypochlorite (stock powder or solution) is a satisfactory chemical sanitizer.

An exposure period of at least 1 minute to at least 50 ppm available chlorine should be maintained when the temperature is at least 24ºC (75ºF). Under these conditions, an exposure of 1 minute is considered adequate for all hypochlorites, including the slower, more alkaline compounds. Lower solution temperatures result in slower action; for each 10ºC (18ºF) drop in temperature, approximately double the exposure time is needed to achieve equivalent bactericidal action with the same strength of solution. It is also possible to compensate for lower temperatures by increasing the concentration of the bactericide.

Hypochlorite bactericides cannot be relied upon in the presence of large amounts of milk or other organic matter. A sharp decline in the available chlorine content of a sanitizer, following circulation through processing equipment, is usually regarded as evidence of inadequate cleaning and should be promptly investigated. When a spray is used in lieu of circulation or immersion, the above specified concentrations of available chlorine should be doubled.

Organic Chlorine Compounds.--The bactericidal action of chloramine T, the chlorinated hydantoins, the chlorinated isocyanurates and other organic forms of chlorine are significantly affected by pH.[a]

Note.--Tricloromelamine, an organic chlorine, may not be used to sanitize product containers, utensils and equipment.

For example, with chloramine T solutions, the maximum pH which can be tolerated and still provide satisfactory results at 200 ppm available chlorine is 7.2; at 100 ppm concentration it is 6.8; and at the 50 ppm level, 6.4. Thus, satisfactory results with formulations of the chemical based on the above equivalent germicidal activities cannot be expected with products which ionize in solutions to give pH values higher than 6.4. The practical value of chloramine T is limited

to situations where long exposure periods are practicable, or where a low pH can be provided.

Chlorinated hydantoin formulations, giving solutions of pH 7.0 and below, should be satisfactory.

Satisfactory results in chlorinated isocyanuric acid solutions of pH values up to 9.5 can be expected.

The marked differences found in bactericidal activity of organic chlorine compounds over the pH range illustrate the necessity of establishing the conditions of use, including concentration, from experimental data.

Quaternary Ammonium Compounds.-- Continued field use has established that certain quaternary ammonium compounds are effective bactericides for the treatment of milk utensils, containers and equipment. The bactericidal effectiveness of specific quaternary ammonium compounds varies and is influenced by the chemical nature and concentration of active agent, temperature, pH, exposure time and by interfering substances present in natural waters. It has been established that the interference of natural waters is due principally to bicarbonates, sulfates and chlorides of calcium and magnesium.[b] Ferrous bicarbonate may also interfere to a lesser degree but its interference is minimized when the iron is oxidized. Any treatment which tends to precipitate, remove or inactivate calcium or magnesium reduces this interference, as does increased pH and temperature.

Products containing n-alkyl (C_8--C_{18}) dimethyl benzyl ammonium chlorides, n-alkyl (C_{14}--C_{18}) dimethyl benzyl ammonium chlorides, alkyl dimethyl dichlorobenzyl ammonium chlorides and n-alkyl (C_{12}--C_{18}) dimethyl ethylbenzyl ammonium chlorides are effective in waters ranging from 550 to 1,100 ppm hardness without added sequestering agents. Other quaternary products such as diisobutyl phenoxy ethoxy ethyl dimethyl benzyl ammonium chloride and methyl dodecyl benzyl trimethyl ammonium chloride-methyl dodecyl xylene bis (trimethyl ammonium chloride) require compounding with sufficient sodium tripolyphosphate to raise their hard water ceiling levels to a minimum of 500 ppm hardness at use concentrations. By proper formulation; however, levels up to 1,200 ppm are possible. The above products have been found to be bactericidally effective when used:

1. At concentrations of 200 ppm or more;
2. At pH levels of 5.0 or higher;
3. At temperatures of 24ºC (75ºF) or higher; and
4. For a 30-second exposure period.

The above-named compounds without sequestering agents are also effective within certain limits of water hardness under the conditions of use enumerated above; however, the level of hardness at which bactericidal activity is reduced below that necessary for effective treatment, varies among the four named compounds and may be influenced by other ingredients in a proprietary formulation. Accordingly, the limiting hardness should be established for the use of each quaternary ammonium product. Unless stated on the label,[c] the regulatory agency should request such information from the manufacturer.

Bacteriological data should be used to establish the usefulness of the above named quaternary ammonium compounds and sequestering agents and any others:

1. At temperatures less than 24ºC (75ºF); or
2. At a pH below 6.0; or
3. When combined with a compatible sequestering agent in waters above 500 ppm of hardness; or
4. Without, or with less than, the specified amount of sequestering agent.

Suggested methods and criteria are given in a following subsection on Other Chemical Sanitizers.

Iodine Compounds.--Another type of halogen sanitizer that has been found effective consists of a combination of iodine with certain non-ionic substances. Although iodine is only slightly soluble in water and is volatile, in combination with non-ionic wetting agents as an iodophor, it is readily soluble in water and is less volatile. When diluted for use, iodophors have a low pH which enhances their germicidal qualities. Increasing the temperatures of a sanitizing solution containing iodophors also increases its effectiveness, but above 49°C (120°F) iodine volatilizes, resulting in a decrease in solution strength.

In solution, iodophors are yellow or amber in color and the intensity is proportional to the concentration of iodine. Concentrations of 12.5 ppm, when used as a bactericide only, and 25 ppm, when used as a detergent-sanitizer, have been found effective. The concentration of iodine can be determined by titration with sodium thiosulfate, and color tests for field use are available. Since the bactericidal properties of different proprietary formulations may vary because of differences in ingredients and pH, their effectiveness may be evaluated by the use of a bacteriological test procedure, such as that proposed by Weber and Black[d] or the Chambers modification thereof[e].

Detergent-Sanitizers.--Bactericides are sometimes combined with detergents in proprietary formulations for the cleaning and bactericidal treatment of containers, utensils, and equipment in a single operation. Such use has been reported to be effective under certain conditions for the cleaning and bactericidal treatment of dairy farm equipment, milk tank trucks, and similar equipment.

The limitations of detergent-sanitizer combinations should be understood if they are to be used effectively. Certain sanitizers and detergents cannot be combined in solution without impairment of bactericidal properties, cleaning properties or both. In addition, the activity of a detergent-sanitizer is likely to be reduced more rapidly by the presence of milk solids and other organic matter, in a combined operation, than when bactericidal treatment is a separate process which follows cleaning.

These factors tend to point up the fact that the usefulness of a detergent-sanitizer for the combined cleaning and sanitizing treatment of product-contact surfaces is dependent on both the composition of the product and its intended use.

"Single-step" operations are actually considered most dependable when the amount of detergent-sanitizer can be carefully proportioned to the exact needs of the equipment involved, assuring effective cleaning and sanitizing, while minimizing the chance of residual chemical deposits on the equipment treated.

Further, and of equal importance to the above, is the need for the protection between treatment and use of all product-contact surfaces so sanitized. The application of untreated rinse water; the handling of equipment, as in the assembly of milking machines on farms or piping systems in milk plants; and the exposure of treated surfaces to airborne contamination through extended storage periods, all tend to downgrade the values suggested for detergent-sanitizers.

These precautions are suggested where detergent-sanitizers are used:

1. Equipment to be treated should be thoroughly pre-rinsed.

2. Solutions should be prepared and used according to manufacturer's directions.

3. Treated equipment which is exposed to any of the hazards of contamination, described above, should be re-sanitized prior to use.

Other Chemical Sanitizers.-- Bactericides other than those described in the previous sections are also available which are suitable for use on milk equipment. Compounds containing bromine and iodine have been found to be effective for bactericidal treatment. In addition, other types of chemical agents are being compounded into proprietary formulations for the bactericidal treatment of milk equipment; however, their bactericidal effectiveness varies with specific formulations. Such compounds should be safe, and the recommended conditions of usage should provide bactericidal treatment at least equal to that given by 50 ppm of chlorine, as hypochlorite, at pH 10.0, at a temperature of 24°C (75°F), and with an exposure period of 1 minute.[f]

Sanitizing solutions should be prepared at a concentration such as to provide bactericidal effectiveness (for circulation and immersion applications) equivalent to that of hypochlorite solutions at a concentration of 50 ppm of available chlorine.

The bactericidal efficiency of chemical compounds may be evaluated without direct comparison to chlorine. Suitable data may be obtained by use of a bacteriological test procedure such as that proposed by Weber and Black[d], or the Chambers modification thereof[e]. These tests provide better comparative data at an endpoint somewhat less than total kill of the test cultures. Therefore, the test time is less than 1-minute exposure period prescribed in Section 7 of this *Ordinance*. Bactericides which, in recommended concentration, produce a 99.999-percent kill of 75-125 million *E. coli* ATTC 11229 and of 75-125 million *M. pyogenes* var. *aureus* ATCC 6538, within 30 seconds at 22°-24°C (70°-75°F), should be considered satisfactory. Swab tests of treated equipment do not furnish sufficient data for this purpose. Valid data can be obtained only when stock cultures and suspensions of the test organisms are prepared in a manner that uniformly maintains their normal level of resistance to germicidal action. Periodic checks to determine the consistency of test results, using a well known chemical such as phenol, is helpful in this regard. The importance of adhering strictly to the composition of mediums and manner of transplanting cultures specified in the test procedures cannot be overemphasized.

II. SANITIZATION OF ASSEMBLED EQUIPMENT

STEAM

When steam is used, each group of assembled piping shall be treated separately by inserting the steam hose into the inlet and maintaining steam flow from the outlet for at least 5 minutes after the temperature of the drainage at the outlet has reached 200°F (94°C). (The period of exposure required here is longer than that required for individual cans, etc., because of the heat lost through the large surface exposed to the air.) Covers must be in place during treatment.

HOT WATER

Hot water may be used by pumping it through the inlet, if the temperature at the outlet end of the assembly is maintained to at least 77°C (170°F) for at least 5 minutes.

CHEMICALS

When chlorine or another chemical solution is used, the solution appearing at the outlet end shall show in excess of the minimum required strength. The chemical solution shall be pumped through the entire equipment for at least 1 minute. Unions and other connectors should be slightly loosened to permit treatment of gaskets and threads, except on lines cleaned-in-place. Surfaces which are not reached by the chemical solution shall be treated with steam as previously described, spray application of chemical solution or by other acceptable means. Header ends and connecting piping of cabinet coolers should not be overlooked, since condensation from them may enter the collecting trough. Chemical sanitizing solutions should be prepared fresh for each use.

TREATMENT OF EQUIPMENT

The treatment of milk cans, coolers, packaging machines, other equipment and all parts thereof, requires special consideration. Large equipment may be treated by thorough swabbing with a bactericidal solution of adequate strength, allowing the solution film to remain at least one minute.

III. SANITIZER STRENGTH AND WATER HARDNESS TESTS

TESTS FOR CHLORINE CONCENTRATION

Three types of field tests are satisfactory for chlorine concentration determinations:

Starch-Iodide Method (iodometric).--This test makes use of the fact that chlorine displaces iodine from potassium iodide in an acid solution (low pH). See general discussions in the latest edition of *Standard Methods for the Examination of Water and Wastewater*, published by the American Public Health Association. Iodine, plus starch, forms a blue color which is removed (decolorized) by the addition of standard sodium thiosulfate. The quantity of standard sodium thiosulfate required to remove the starch-iodine color is a measure of the chlorine present.

Field kits are available which give satisfactorily accurate readings of available chlorine. In some of these kits, the starch and potassium iodide are mixed in dry form for convenience of handling. Some use a liquid acid while others employ, for convenience, a crystalline one, such as sulphamic acid. The sodium thiosulfate is unstable unless a preservative is added. Some test kits make use of a preserved standardized sodium thiosulfate so that one drop of solution is equivalent to 10 ppm of available chlorine. Test kits should be checked periodically against standardized chlorine solutions.

Orthotolidine Colorimetric Comparison.--This test is based on the fact that orthotolidine, which is colorless, forms an orange-brown colored compound when added to chlorine. The depth of color is a measure of the amount of chlorine present. A concentration of 20 ppm of available chlorine causes a precipitate. Consequently, solutions which are concentrated must be diluted, usually at least 1:10 with chlorine-free water. Specific directions and color standards for comparison are included in test kits. Such test kits are available commercially. Color develops more slowly with alkaline hypochlorites than with the less alkaline compounds. Chloramines are considerably slower than alkaline hypochlorites in color formation, usually requiring at least 5 minutes.

Indicator Paper Test.--The indicator paper test is widely used in situations where a high degree of accuracy is not required. It is a convenient, rapid and generally a useful screening device. Ranges of chlorine concentration are indicated by the color developed on the test paper (usually starch-iodide impregnated) as it is immersed in the solution being tested.

Indicator papers are subject to rather rapid deterioration, especially if they are stored in a damp or chemically adverse environment. Their accuracy also suffers when they are handled excessively, especially if the operator's hands have been exposed to detergents, sanitizers or other chemically active substances.

TESTS FOR QUATERNARY AMMONIUM COMPOUNDS

Test kits are available which give satisfactory accurate readings within the range of recommended quaternary ammonium compound concentrations.

In some, the reagents are tableted for convenience of handling while others make use of test papers. Where the sanitizing solution is essentially clear and free from organic contamination, the above chemical test procedures will measure the amount of bactericidally active quaternary ammonium compound present during or after use. Where organic contamination is apparent, as evidenced by cloudiness in the sanitizing solution, the test sample should be heated to boiling for at least 5 minutes, and the supernatant liquid made up to volume with water and then removed for testing by pipetting or decantation in order to differentiate between the total amount of quaternary ammonium compound present and the amount bactericidally active[g]. If there is reason to verify the concentration of the stock quaternary ammonium compound solution from which the standardized solutions are made, a laboratory procedure such as that of Furlong and Elliker may be used.[h]

TESTS FOR WATER HARDNESS

The water to be used for preparing solutions should, if pertinent, be within the range of hardness in which the proprietary formulation to be used is effective. Hardness may be determined by either the Hardness by Calculation Method or the Versenate Test (EDTA, titration method, ammonium buffer procedure), as described in the latest edition of *Standard Methods for the Examination of Water and Wastewater* published by the American Public Health Association.

TESTS FOR HYDROGEN-ION CONCENTRATION

Hydrogen-ion concentration (pH) has a pronounced effect on the activity of sanitizing solutions. Consequently, solutions must be maintained in the pH range within which the bactericidal agent is effective. In most cases, the pH of the solution is dependent upon the buffering action of the compound used. The pH of bactericide solutions can best be determined electrometrically, using the glass electrode. However, for a field test, colorimetric methods are more applicable. Two types of test kits for such determinations are available commercially. Colorimetric readings should be made immediately, because of the tendency toward oxidation and decolorization of the indicator. Such indicators as bromthymol blue, cresol red, thymol blue, or others are satisfactory, depending upon the pH range desired.

References

[a] Ortenzio, L. F. and Stuart, L. S., *The Behavior of Chlorine-Bearing Organic Compounds in the*

AOAC Available Chlorine Germicidal Equivalent Concentration Test. Journal of the Association of Official Agricultural Chemists. August 1959.

[b] Chambers, Kabler, Bryant, Chambers, and Ettinger, *Bacterial Efficiency of Q.A.C. in Different Waters*. Public Health Reports, 70:545-554. June 1955.

[c] Bactericides shipped interstate are subject to the provisions of the *Federal Insecticide. Fungicide, and Rodenticide Act* and their labels must be registered with the U. S. Environmental Protection Agency.

[d] American Journal of Public Health, 38:1405-17,1948.

[e] Chambers C. W., *A Procedure for Evaluating the Efficiency of Bactericidal Agents*. Journal of Milk and Food Technology, 19:183-187, July 1950.

[f] *Criteria for the Selection of Germicides*, American Journal of Public Health, 51:1054-60, July 1961.

[g] Law, McNulty and Rakus, *Development of a Procedure for Chemical Assay of the Bacterially Active Ingredient in Quaternary Ammonium Sanitizing Solutions.* Manufacturing Chemist and Aerosol News. November 1964. Lautier Fils Ltd., London.

[h] Journal of Dairy Science, 36:225-234, March 1953.

APPENDIX C.

AIR FOR DRYING EQUIPMENT AND AIR UNDER PRESSURE PRODUCT-CONTACT SURFACES

I. AIR FOR DRYING EQUIPMENT

FILTER MEDIA.--Intake air filter media shall consist of fiberglass, cotton flannel, wool flannel, spun metal, activated carbon, activated alumina, non-woven fabric, absorbent cotton fiber, electrostatic, or other suitable materials which, under conditions of intended use, are non-toxic and non-shedding and which do not release toxic volatiles or other contaminants to the air, or volatiles which impart any flavor or odor to the product. Chemical bonding materials contained in the media shall be non-toxic, non-volatile and insoluble under all conditions of use. Disposable media are not intended to be cleaned and re-used.

FILTER PERFORMANCE.--The air supply system and/or ducting shall be such that the air supply is caused to pass through suitable air filters, properly installed, before coming in contact with product-contact surfaces of the drying system. Supply air filters for air which will be heated before it comes in contact with the product shall be of a design, selected to operate at a face velocity, and installed in a manner which will allow the filter manufacturer's rating to be 90 percent or higher, when tested in accordance with the ASHRAE Synthetic Dust Arrestance test.[a]

Supply air filters for air which will not be heated before it comes in contact with the product shall be of a design, selected to operate at a face velocity, and installed in a manner which will allow the filter manufacturer's rating to be 85 percent or higher when tested in accordance with the ASHRAE Atmospheric Dust Spot Method.[a]

II. AIR UNDER PRESSURE--PRODUCT-CONTACT SURFACES

MATERIAL

FILTER MEDIA.--Air intake and pipeline filters shall consist of fiberglass, cotton flannel, wool flannel, spun metal, electrostatic material, or other equally acceptable filtering media, which are non-shedding and which do not release to the air, toxic volatiles, or volatiles which may impart any flavor or odor to the product.

Disposable media filters shall consist of cotton flannel, wool flannel, spun metal, non-woven fabric, U.S.P. absorbent cotton fiber, or suitable inorganic materials which, under conditions of use, are nontoxic and non-shedding. Chemical bonding material contained in the media shall be nontoxic, nonvolatile, and insoluble under all conditions of use. Disposable media shall not be cleaned and reused.

FILTER PERFORMANCE.--The efficiency of intake filters shall be at least 50 percent as measured by the National Bureau of Standards' "Dust Spot Method"[b] using atmospheric dust as the test aerosol.

The efficiency of either air pipeline filters or disposable filters shall be at least 50 percent as measured by the DOP (Dioctyl 1-phthalate fog) test[c].

PIPING. Air distribution piping, fittings and gaskets between the terminal filter and any product or product-contact surface, shall be sanitary milk piping, except where the compressing equipment is of the fan or blower type. When the air is used for such operations as removing containers from mandrels, other nontoxic materials may be used.

FABRICATION AND INSTALLATION

AIR SUPPLY EQUIPMENT.--The compressing equipment shall be designed to preclude contamination of the air with lubricant vapors and fumes. Oil-free air may be produced by one of the following methods or their equivalent:

1. Use of a carbon ring piston compressor.
2. Use of oil-lubricated compressor with effective provision for removal of any oil vapor by cooling the compressed air.
3. Water-lubricated or non-lubricated blowers.

The air supply shall be taken from a clean space or from relatively clean outer air and shall pass through a filter upstream from the compressing equipment. This filter shall be located and constructed so that it is easily accessible for examination, and the filter media are easily removable for cleaning or replacing. The filter shall be protected from weather, drainage, water, product spillage and physical damage.

MOISTURE REMOVAL EQUIPMENT.--If it is necessary to cool the compressed air, an aftercooler shall be installed between the compressor and the air storage tank for the purpose of removing moisture from the compressed air.

FILTERS AND MOISTURE TRAPS.--Filters shall be constructed so as to assure effective passage of air through the filter media only.

The air under pressure shall pass through an oil-free filter and moisture trap for removal of solids and liquids. The filter and trap shall be located in the air pipeline, downstream from the compressing equipment, and from the air tank, if one is used. Air pipeline filters and moisture traps, downstream from compressing equipment, shall not be required where the compressing equipment is of the fan or blower type.

A disposable media filter shall be located in the sanitary air pipelines upstream from and as close as possible to each point of application or ultimate use of the air.

AIR PIPING.--The air piping from the compressing equipment to the filter and moisture trap shall be readily drainable.

A product-check valve of sanitary design shall be installed in the air piping, downstream from the disposable media filter, to prevent back-flow of product into the air pipeline, except that a check valve shall not be required if the air piping enters the product zone from a point higher than the product overflow level which is open to the atmosphere.

The requirements of this section do not apply when the compressing equipment is of the fan or blower type. See illustrations depicting various air supply systems.

Note.--For additional details, see *3-A Accepted Practices for Supplying Air Under Pressure in Contact With Milk, Milk Products and Product-Contact Surfaces.*

References

[a]The method of making these tests will be found in the following reference: *Method of Testing Air Cleaning Devices, ASHRAE Standard 52-76.*Available from The American Society of Heating, Refrigerating,

and Air-Conditioning Engineers, Inc., 345 E. 47th St., New York, New York 10017.

[b]Dill,R. S.,*A Test Method for Air Filters*. Transactions of the American Society of Heating and Ventilation Engineers, 44:379, 1938.

[c]*DOP-Smoke Penetration and Air Resistance of Filters, Military Standard No. 282, Section 102.9.1* Naval Supply Depot, 5801 Tabor Avenue, Philadelphia, Pennsylvania 19120.

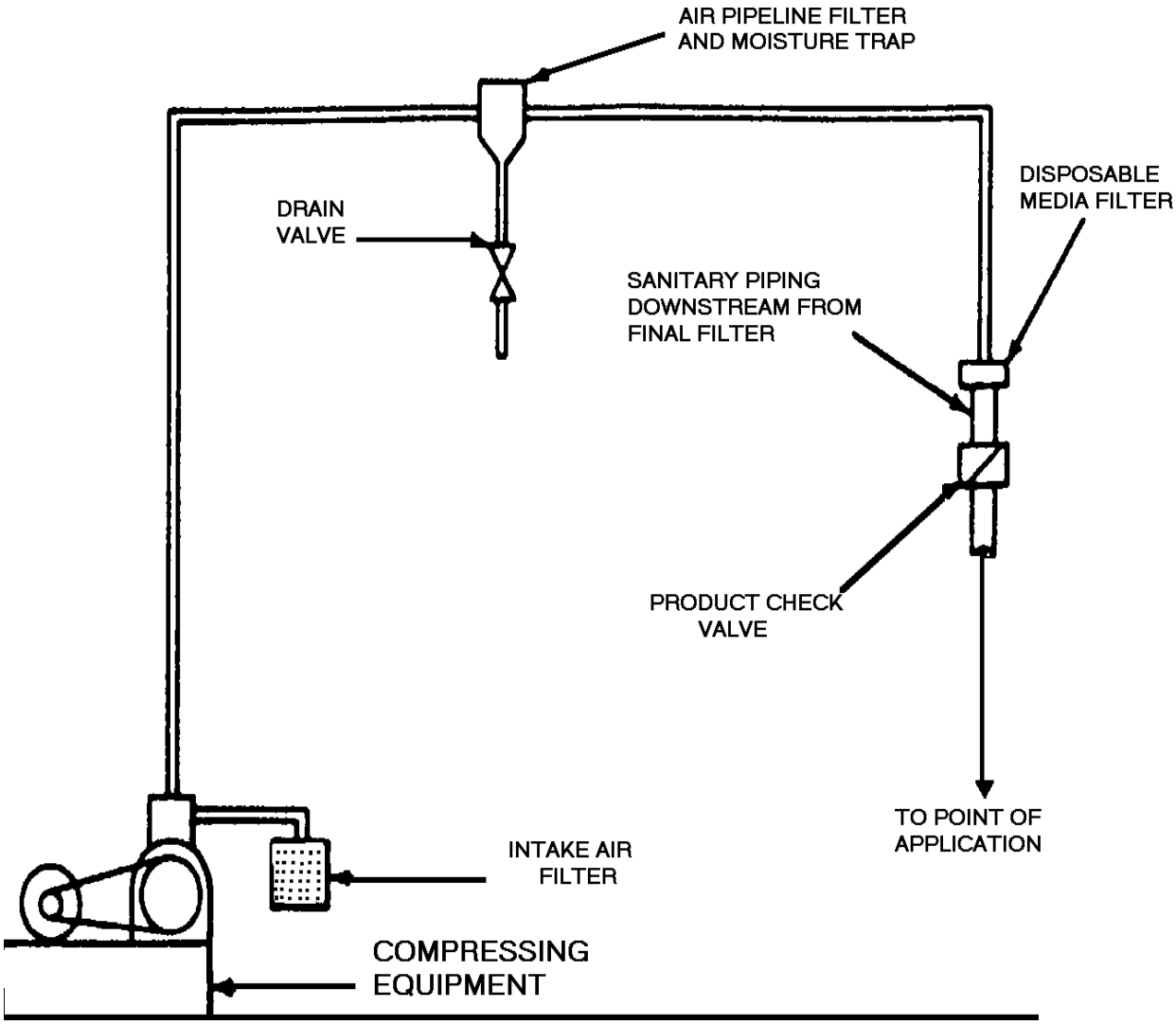

FIGURE 1. INDIVIDUAL COMPRESSION-TYPE AIR SUPPLY.

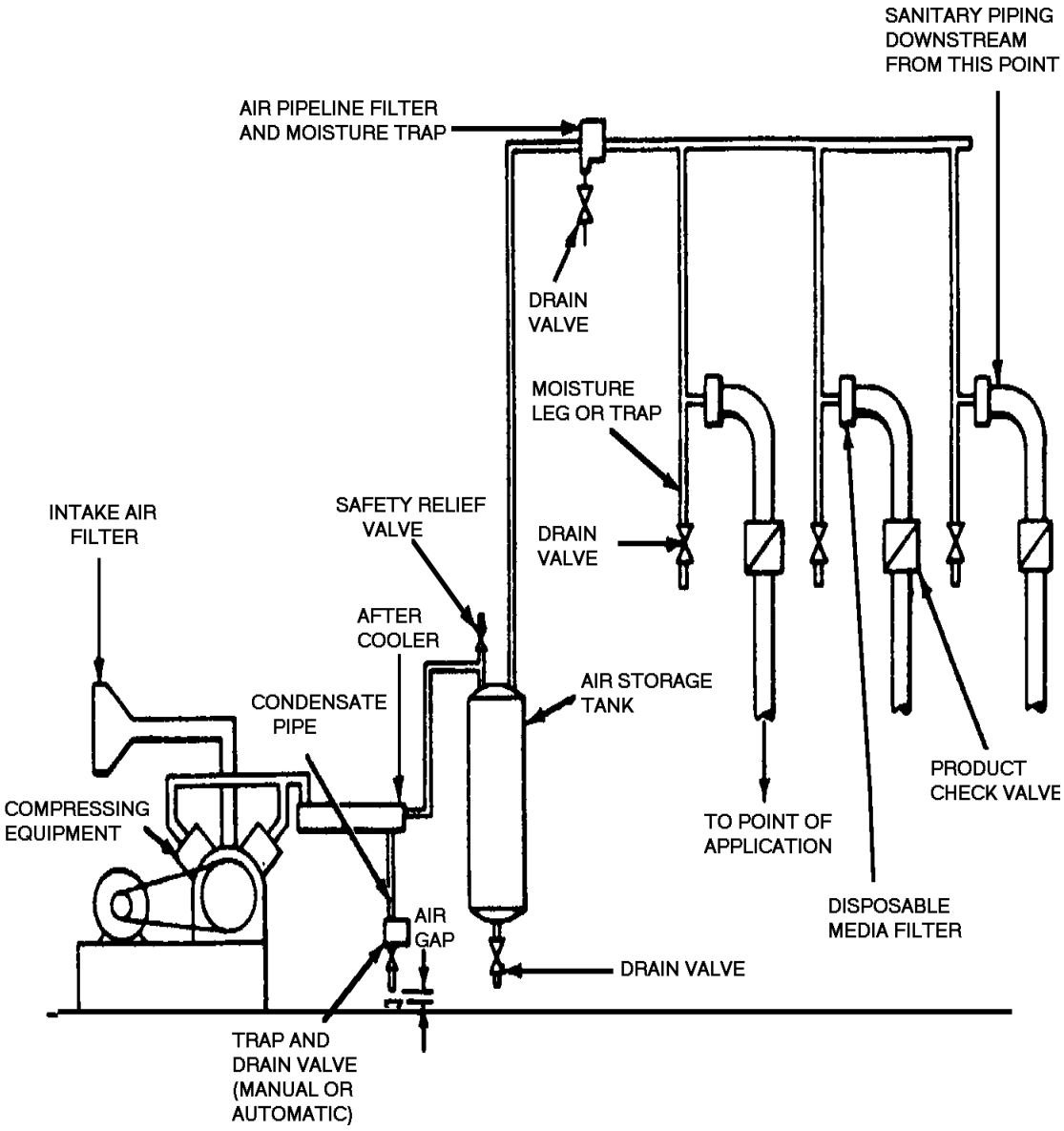

FIGURE 2. CENTRAL COMPRESSION-TYPE AIR SUPPLY.

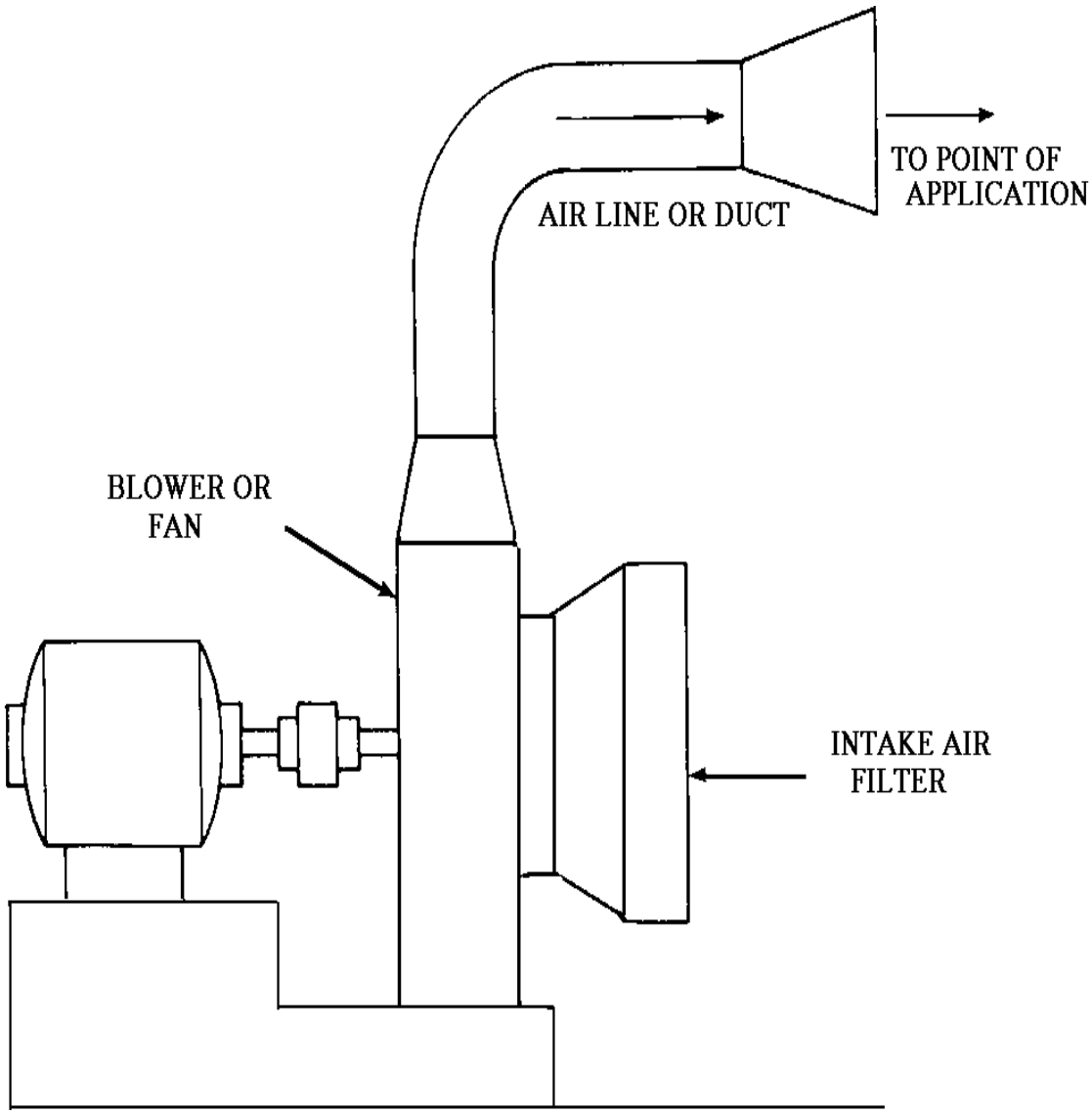

FIGURE 3. INDIVIDUAL BLOWER TYPE AIR SUPPLY.

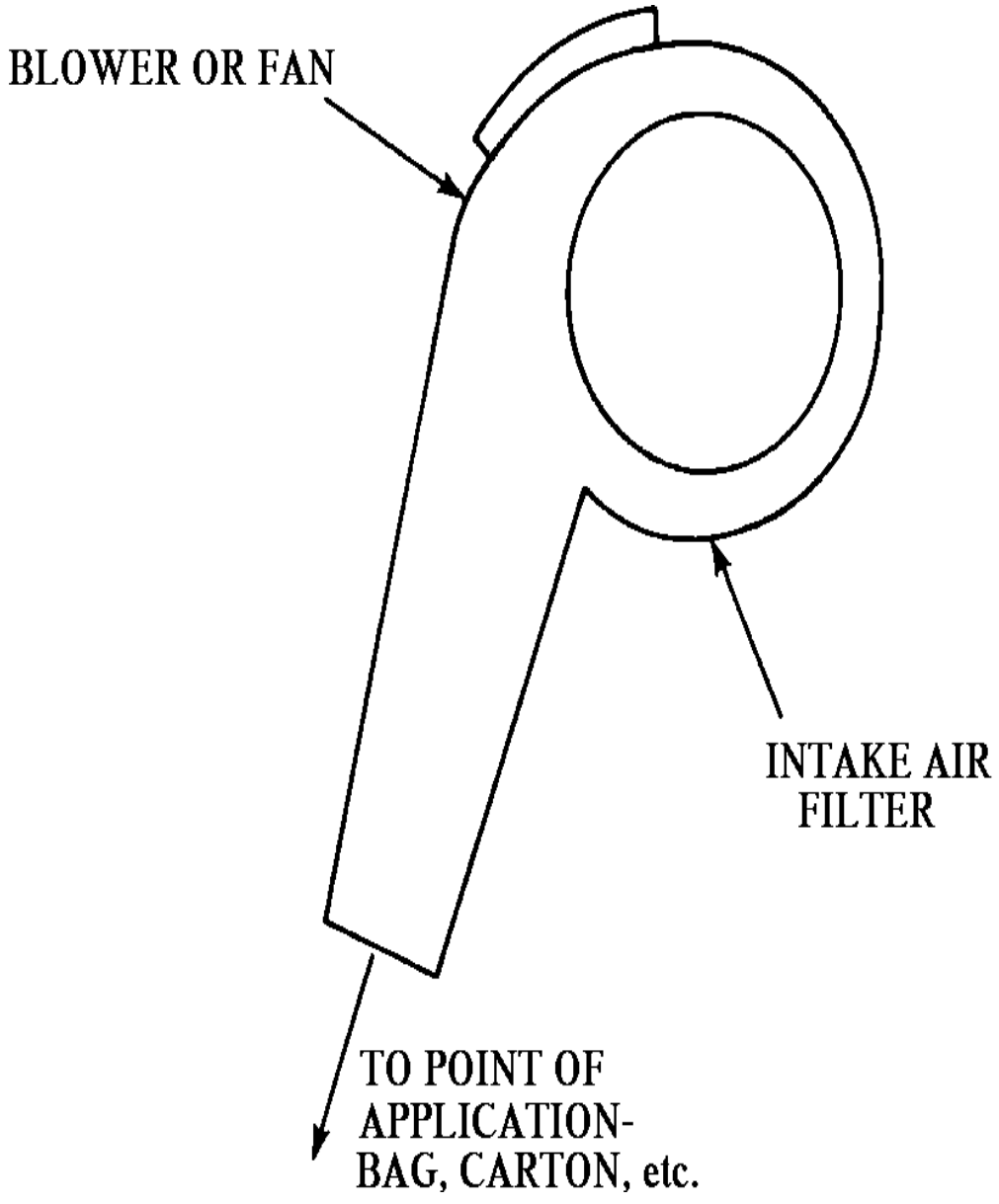

FIGURE 4. INDIVIDUAL FAN TYPE AIR SUPPLY.

APPENDIX D.

CULINARY STEAM--MILK, MILK PRODUCTS AND WHEY

The following methods and procedures will provide steam of culinary quality for use in the processing of milk, milk products and whey.

SOURCE OF BOILER FEED WATER

Potable water or water supplies acceptable to the regulatory agency will be used.

FEED WATER TREATMENT

Feed waters may be treated, if necessary, for proper boiler care and operation. Boiler feed water treatment and control shall be under the supervision of trained personnel or a firm specializing in industrial water conditioning. Such personnel shall be informed that the steam is to be used for culinary purposes. Pretreatment of feed waters for boilers or steam generating systems to reduce water hardness, before entering the boiler or steam generator by ion exchange or other acceptable procedures, is preferable to the addition of conditioning compounds to boiler waters. Only compounds complying with Section 173.310 of Title 21 of the *Code of Federal Regulations* may be used to prevent corrosion and scale in boilers or to facilitate sludge removal.

Greater amounts shall not be used of the boiler water treatment compounds than the minimum necessary for controlling boiler scale or other boiler water treatment purposes. No greater amount of steam shall be used for the treatment and/or pasteurization of milk, milk products and whey than necessary.

It should be noted that tannin, which is also frequently added to boiler water to facilitate sludge removal during boiler blow-down, has been reported to give rise to odor problems, and should be used with caution.

Boiler compounds containing cyclohexylamine, morpholine, octadecylamine, diethylaminoethanol, trisodium nitrilotriacetate, and hydrazine shall not be permitted for use in steam in contact with milk, milk products and whey.

BOILER OPERATION

A supply of clean, dry saturated steam is necessary for proper equipment operation. Boilers and steam generation equipment shall be operated in such a manner as to prevent foaming, priming, carryover and excessive entrainment of boiler water into the steam. Carryover of boiler water additives can result in the production of milk off-flavors. Manufacturers' instructions regarding recommended water level and blow-down should be consulted and rigorously followed. The blow-down of the boiler should be carefully watched, so that an over concentration of the boiler water solids and foaming is avoided. It is recommended that periodic analyses be made of condensate samples. Such samples should be taken from the line between the final steam separating equipment and the point of the introduction of steam into the product.

PIPING ASSEMBLIES

Suggested piping assemblies for steam infusion or injection are shown on p. 105.

Other assemblies which will assure a clean dry saturated steam are acceptable.

WATER RECLAIMED FROM THE CONDENSING OF MILK AND MILK PRODUCTS

Condensing water from milk evaporators and water reclaimed from milk and milk products may be reused in a milk processing plant. Acceptable uses of this water fall into three general categories:

1. Reclaimed water which may be used for all potable water purposes including the production of culinary steam.
2. Reclaimed water which may be used for limited purposes including the production of culinary steam.
3. Use of reclaimed water not meeting the requirements of this section.

Reclaimed water to be used for potable water purposes, including the production of culinary steam, shall meet the following requirements:

1. Water shall comply with the bacteriological standards of Appendix G, page 181, and, in addition, shall not exceed a total plate count of 500 per milliliter.
2. Samples shall be collected daily for two weeks following initial approval of the installation and semi-annually thereafter. *Provided,* that daily tests shall be conducted for one week following any repairs or alteration to the system.
3. The organic content shall be less than 12 mg/l as measured by the chemical oxygen demand or permanganate-consumed test; or a standard turbidity of less than 5 units.
4. Automatic fail safe monitoring devices shall be used to monitor and automatically divert (to the sewer) any water which exceeds the standard.
5. The water shall be of satisfactory organoleptic quality and shall have no off-flavors, odors or slime formations.
6. The water shall be sampled and tested organoleptically at weekly intervals.
7. Approved chemicals, such as chlorine, with a suitable detention period, may be used to suppress the development of bacterial growth and prevent the development of tastes and odors.
8. The addition of chemicals shall be by an automatic proportioning device, prior to the water entering the storage tank, to assure satisfactory quality water in the storage tank at all times.
9. When chemicals are added, a daily testing program for such added chemicals shall be in effect and such chemicals shall not add substances that will prove deleterious to the use of the water or contribute to product contamination.
10. The storage vessel shall be properly constructed of such material that it will not contaminate the water and can be satisfactorily cleaned.
11. The distribution system, within a plant, for such reclaimed water shall be a separate system with no cross-connections to a municipal or private water system.
12. All physical, chemical and microbiological tests shall be conducted in accordance with the latest edition of *Standard Methods for the Examination of Water and Wastewater*.

Reclaimed water may be used for limited purposes including:

1. Production of culinary steam.
2. Pre-rinsing of the product surfaces where pre-rinses will not be used in food products.
3. Cleaning solution make-up water.

Provided that for these uses items #3-11 of this section are satisfied and:

a. There is no carry-over of water from one day to the next, and any water collected is used promptly; or

The temperature of all water in the storage and distribution system is maintained at 63°C (145°F) or higher by automatic means; or

The water is treated with a suitable, approved chemical to suppress bacterial propagation by means of an automatic proportioning device, prior to the water entering the storage tank; and that,

b.Distribution lines and hose stations are clearly identified as "limited use reclaimed water"; and

c.Water handling practices and guidelines are clearly described and prominently displayed at appropriate locations within the plant; and

d.These water lines are not permanently connected to product vessels, without a break to the atmosphere and sufficient automatic controls, to prevent the inadvertent addition of this water to product streams.

Recovered water not meeting the requirements of this section may be used as boiler feedwater for boilers, not used for generating culinary steam, or in a thick, double walled, enclosed heat exchanger.

VI. WATER RECLAIMED FROM HEAT EXCHANGER PROCESSES

Potable water utilized for heat exchange purposes in plate or other type heat exchangers or compressors on grade A dairy farms may be salvaged for the milking operation if the following criteria are met:

1. The water shall be stored in a storage vessel properly constructed of such material that it will not contaminate the water and be designed to protect the water supply from possible contamination.

2. The storage vessel shall be equipped with a drain and access point to allow for cleaning.

3. No cross-connection shall exist between this supply and any unsafe or questionable water supply or any other source of pollution.

4. There are no submerged inlets through which this supply may be contaminated.

5. The water shall be of satisfactory organoleptic quality and shall have no off flavors or odors.

6. The water shall comply with the bacteriological standards of Appendix K, page 181.

7. Samples shall be collected and analyzed prior to initial approval and semi-annually thereafter.

8. Approved chemicals, such as chlorine, with a suitable retention period, may be used to suppress the development of bacterial growth and prevent the development of tastes and odors.

9. When chemicals are added, a monitoring program for such added chemicals shall be in effect and such chemicals shall not add substances that will When chemicals are added, a monitoring program for such added chemicals shall be in effect and such chemicals shall not add substances that will prove deleterious to the use of the water or contribute to product contamination.

10. If the water is to be used for the sanitizing of teats or equipment (backflush systems), approved sanitizers, such as iodine may be added by an automatic proportioning device located downstream from the storage vessel but prior to its end-use application.

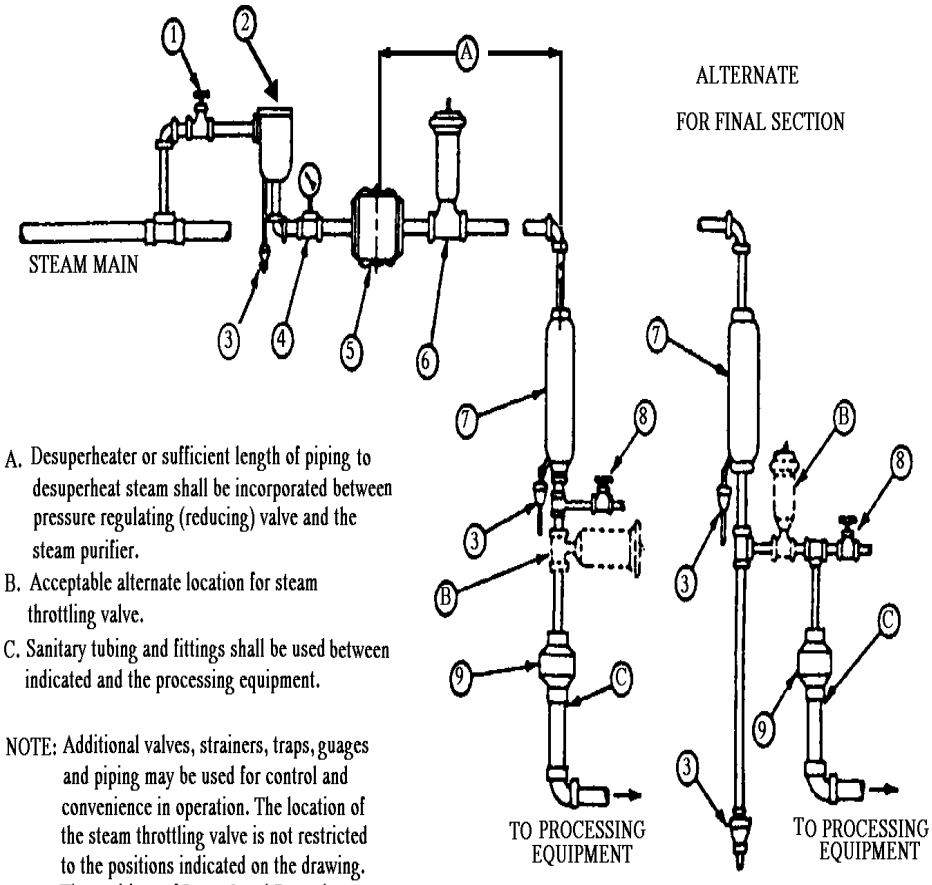

A. Desuperheater or sufficient length of piping to desuperheat steam shall be incorporated between pressure regulating (reducing) valve and the steam purifier.

B. Acceptable alternate location for steam throttling valve.

C. Sanitary tubing and fittings shall be used between indicated and the processing equipment.

NOTE: Additional valves, strainers, traps, guages and piping may be used for control and convenience in operation. The location of the steam throttling valve is not restricted to the positions indicated on the drawing. The positions of Items 2 and 7 may be reversed if desired.

LEGEND

1. Stop valve off steam main.
2. Filter, Adams carbon core or equivalent.
3. Condensate trap.
4. Pressure guage.
5. Steam pressure regulating (reducing) valve.
6. Steam throttling valve (automatic or manual). An alternate location is shown at B.
7. Steam purifier, Anderson Hi-eF or equivalent.
8. Steam sampling valve and connection.
9. Spring loaded sanitary check valve.

FIGURE 5. CULINARY STEAM PIPING ASSEMBLY FOR STEAM INFUSION OR INJECTION.

Appendix E
THERMOMETER SPECIFICATIONS

INDICATING THERMOMETERS LOCATED ON PASTEURIZATION PIPELINES

Type.-- Mercury-actuated; direct-reading; contained in corrosion-resistant case, which protects against breakage and permits easy observation of column and scale; filling above mercury, nitrogen or equally suitable gas. *Provided*, that types other than mercury actuated may be used when they have been: (1) Recognized by the Food and Drug Administration to be equally fail-safe, accurate, reliable, and meet the scale and thermometric response specifications and (2) Which are approved by the regulatory agency.

Scale.--Shall have a span of not less than 14 Celsius degrees (25 Fahrenheit degrees), including the pasteurization temperature, plus and minus 0.25°C (0.5°F) division, with not more than 4 Celsius degrees (8 Fahrenheit degrees) per 25 millimeters (inch) of scale; protected against damage at 105°C (220°F), and in the case of thermometers used on HHST systems protected against damage at 149°C (300°F).

Accuracy.--Within 0.2°C (0.5°F), plus or minus, throughout the specified scale span. (Appendix F, Test 1, p. 112).

Stem Fittings.--Pressure-tight seat against inside wall of fittings; no threads exposed to milk; distance from underside of ferrule to top of the sensitive portion of bulb not less than 76 millimeters (3 inches).

Thermometric Response.--When the thermometer is at room temperature and then is immersed in a well-stirred water bath 11°C (19°F) or less above the pasteurization temperature; the time required for the reading to increase from water bath temperature, minus 11°C (19°F), to water bath temperature, minus 4°C (7°F), shall not exceed 4 seconds. (Appendix F, Test 7, p. 119).

Bulb.--Corning normal, or equally suitable thermometric glass.

RECORDER/CONTROLLERS FOR CONTINUOUS PASTEURIZERS

Case.--Moistureproof under normal operating conditions in pasteurization plants.

Chart Scale.--Shall have a span of not less than 17 Celsius degrees (30 Fahrenheit degrees), including the temperature at which diversion is set, plus and minus, 7°C (12°F), graduated in temperature scale divisions of 0.5°C (1°F), spaced not less than 1.6 millimeter (0.0625 of an inch) apart at the diversion temperature, plus or minus, 0.5°C (1°F). *Provided*, that temperature-scale divisions of 0.5°C (1°F), spaced not less than 1 millimeter (0.040 of an inch) apart, are permitted when the ink line is thin enough to be easily distinguished from the printed line, graduated in time-scale divisions of not more than 15 minutes, and having an equivalent 15 minute chord or straight-line length of not less than 6.3 millimeters (0.25 of an inch) at the diversion temperature, plus or minus 0.5°C (1°F).

Temperature Accuracy.--Within 0.5°C (1°F), plus or minus, at the temperature at which the controller is set to divert, plus and minus 3°C (5°F) (Appendix F, Test 2, p. 113).

Power Operated.--All recorder/controllers for continuous pasteurization shall be electrically operated.

Pen-Arm Device.--Easily accessible; simple to adjust.

Pen and Chart Paper.--Pen designed to give line not over .07 millimeter (0.025 of an inch) wide; easy to maintain.

Temperature Sensing Device.--Bulb, tube, spring or thermistor, protected against damage at a temperature of 105°C (220°F). *Provided*, that recorder controller temperature sensing devices, used on HHST systems, shall be protected against damage at temperatures of 149°C (300°F).

Submerge Stem Fitting.--Pressure-tight seat against inside wall of pipe; no threads exposed to milk or milk products; and location from underside of ferrule to the sensitive portion of the bulb not less than 76 millimeters (3 inches).

Chart Speed.--A circular chart shall make one revolution in not more than 12 hours. Two charts shall be used if operations extend beyond 12 hours in 1 day. Circular charts shall be graduated for a maximum record of 12 hours. Strip-charts may show a continuous recording over a 24-hour period.

Frequency Pen.--The recorder/controller shall be provided with an additional pen-arm for recording, on the outer edge of the chart, the record of the time at which the flow-control device is in the forward-flow, diverted-flow or stopped position. The chart time line shall correspond with the reference arc, and the recording pen shall rest upon the time line matching the reference arc.

Controller.--Actuated by same sensor as recorder pen, but cut-in and cut-out response independent of pen-arm movement.

Controller Adjustment.--Mechanism for adjustment of response temperature simple, and so designed that the temperature setting cannot be changed or the controller manipulated without detection.

Thermometric Response.--With the recorder/controller bulb at room temperature and then immersed in a well stirred water or oil bath at 4°C (7°F) above the cut-in point, the interval between the moment when the recording thermometer reads 7°C (12°F) below the cut-in temperature and the moment of power cut-in shall be not more than 5 seconds (Appendix F, Test 8, p. 120).

Chart Support Drive.--The rotating chart support drive shall be provided with a pin to puncture the chart in a manner to prevent its fraudulent rotation.

INDICATING THERMOMETERS USED IN STORAGE TANKS

Scale Range.--Shall have a span not less than 28 Celsius degrees (50 Fahrenheit degrees), including normal storage temperatures, plus and minus 3°C (5°F), with extension of scale on either side permitted and graduated in not more than 1°C (2°F) divisions.

Temperature Scale Division.--Spaced not less than 1.6 millimeters (0.0625

of an inch) apart between 2°C and 13°C (35°F and 55°F).

Accuracy.--Within 1°C (2°F), plus or minus, throughout the specified scale range.

Stem Fitting.--Pressure-tight seat or other suitable sanitary fittings. No threads exposed.

RECORDING THERMOMETERS USED IN STORAGE TANKS

Case.--Moistureproof under operating conditions in processing plants.

Scale.--Shall have a scale span of not less than 28 Celsius degrees (50 Fahrenheit degrees) including normal storage temperature, plus and minus 3°C (5°F), graduated in not more than 1°C (2°F) divisions, spaced not less than 1 millimeter (0.040 of an inch) apart, are permitted when the ink line is thin enough to be easily distinguished from the printed line and graduated in time scale divisions of not more than 1 hour, having a chord of straight-line length of not less than 3.2 millimeter (0.125 of an inch) at 5°C (40°F). Chart must be capable of recording temperatures up to 83°C (180°F). (Span specifications do not apply to extensions beyond 38°C (100°F).

Temperature Accuracy.--Within 1°C (2°F), plus or minus, between specified range limits.

Pen-Arm Setting Device.--Easily accessible; simple to adjust.

Pen and Chart Paper.--Designed to give line not over .635 millimeter (0.025 of an inch) thick when in proper adjustment; easy to maintain.

Temperature Sensor.--Protected against damage at 100°C (212°F).

Stem Fittings.--Pressure-tight seat or other suitable sanitary fitting. No threads exposed.

Chart Speed.--The circular chart shall make one revolution in not more than 7 days and shall be graduated for a maximum record of 7 days. Strip chart shall move not less than 25 millimeter (1 inch) per hour and may be used continuously for 1 calendar month.

RECORDING THERMOMETERS ON MECHANICAL CLEANING SYSTEMS

Location.--Temperature sensor in the return solution line downstream from process.

Case.--Moistureproof under operation conditions.

Scale.--Shall have a range from 16°C to 83°C (60°F to 180°F), with extensions of scale on either side permissible and graduated in time-scale divisions of not more than 15 minutes. Above 44°C (110°F), the chart is to be graduated in temperature divisions of not more than 1°C (2°F), spaced not less than 1.6 millimeters (0.0625 of an inch) apart. *Provided*, that temperature-scale divisions of 1°C (2°F), spaced not less than 1 millimeter (0.040 of an inch) apart, are permitted when the ink line is thin enough to be easily distinguished from the printed line.

Temperature Accuracy.--Within 1°C (2°F), plus or minus, above 44°C (110°F).

Pen-Arm Setting Device.--Easily accessible; simple to adjust.

Pen and Chart Paper.--Designed to make a line not over .635 millimeter (0.025 of an inch) wide; easy to maintain.

Temperature Sensor.--Protected against damage at 100°C (212°F).

Stem Fitting.--Pressure-tight seat against inside wall of pipe; no threads exposed to solution.

Chart Speed.--Circular charts shall make one revolution in not more than 24 hours. Strip charts shall not move less than 25 millimeters (1 inch per hour). More than one record of the cleaning operation shall not overlap on the same section of the chart for either circular- or strip-type charts.

INDICATING THERMOMETERS USED IN REFRIGERATED ROOMS

Indicating thermometers used in refrigerated rooms, where milk and milk products are stored, shall meet the following specifications:

Scale Range.--Shall have a span not less than 28 Celsius degrees (50 Fahrenheit degrees), including normal storage temperatures, plus and minus 3°C (5°F), with extensions of scale on either side permitted if graduated in not more than 1°C (2°F) divisions.

Temperature Scale Divisions.--Spaced not less than 1.6 millimeter (0.0625 of an inch) apart between 0°C and 13°C (32°F and 55°F).

Accuracy.--Within 1°C (2°F), plus or minus, throughout the specified scale ranges.

SPECIFICATIONS FOR RECORDING pH METER FOR USE ON AUTOMATED MECHANICAL CLEANING SYSTEMS FOR EVAPORATORS

Location.--pH sensor shall be located in the return line down-stream from processing equipment and all lines included in the cleaned-in-place circuit.

Case.--Moistureproof under operating conditions.

Scale.--It shall have a range of pH value from 2 to 12 with extensions of scale on either side permissible and graduated in time scale divisions of not more than 15 minutes. The chart is to be graduated in pH divisions of not more than 0.5 pH values and spaced not less than 1.6mm (0.0625 of an inch) apart.

pH Accuracy.--Within 0.5, plus or minus pH values.

Pen-Arm Setting Device.--Easily accessible; simple to adjust.

Pen and Chart Paper.--Designed to mark a line not over 0.635mm (0.025 of an inch) wide; easy to maintain.

pH Sensor.--Protected against damage at 83°C (180°F).

Chart Speed.--Circular charts shall make one revolution in not more than 24 hours. Strip charts shall not move slower than 25mm (1 inch) per hour. More than one record of the cleaning operation shall not overlap on the same section of the chart for either circular- or strip-type charts.

APPENDIX F.

PASTEURIZATION EQUIPMENT AND CONTROLS--TESTS

I. TESTING APPARATUS SPECIFICATIONS

TEST THERMOMETER

Type.--Mercury-actuated; readily cleanable; plain front, enameled back; length 305 millimeters (12 inches); immersion point to be etched on stem; mercury to stand in contraction chamber at O°C (32°F).

Scale Range.--At least 7°C (12°F) below and 7°C (12°F) above the pasteurization temperature at which the operating thermometer is used, with extensions of scale on either side permitted; protected against damage at 149°C (300°F).

Temperature Represented by Smallest Scale Division.--0.1°C (0.2°F).

Number of Degrees per 25 Millimeters (Inch) of Scale.--Not more than 4 Celsius degrees or not more than 6 Fahrenheit degrees.

Accuracy.--Within 0.1°C (0.2°F), plus or minus, throughout specified scale range. The accuracy shall be checked against a thermometer which has been tested by the National Bureau of Standards.

Bulb.--Corning normal or equally suitable thermometric glass.

Case.--Suitable to provide protection during transit and periods when not in use.

GENERAL PURPOSE THERMOMETER

Type.--Pocket type; mercury-actuated.

Magnification of Mercury Column.--To apparent width of not less than 1.6 millimeter (0.0625 of an inch).

Scale Range.---1°C (30°F) to 100°C (212°F), with extension on either side permitted. Protected against damage at 105°C (220°F).

Temperature Represented by Smallest Scale Division.--l°C (2°F).

Number of Degrees per Inch of Scale.--Not more than 29 Celsius degrees or not more than 52 Fahrenheit degrees.

Accuracy.--Within 1°C (2°F), plus or minus, throughout the specified scale range. Checked periodically against a known accurate thermometer.

Case.--Metal, provided with a fountain pen clip.

Bulb.--Corning normal or equally suitable thermometric glass.

ELECTRICAL CONDUCTIVITY MEASURING DEVICES

Type.--Wheatstone bridge, Galvanometer, Milliammeter, manual or automatic.

Conductivity.--Capable of detecting change produced by the addition of 10 ppm of sodium chloride, in water of 100 ppm of hardness.

Electrodes.--Standard.

Automatic Instruments.--Electric clock, time divisions not less than 0.2 of a second.

STOPWATCH

Type.--Open face, indicating fractional seconds.

Accuracy.--Accurate to 0.2 of a second.

Hands.--Sweep hand (if applicable), one complete turn every 60 seconds or less.

Scale.--Divisions of not over 0.2 of a second.

Crown.--Depression of crown or push button starts, stops and resets to zero.

II. TEST PROCEDURES

Equipment and field tests to be performed by the regulatory agency are listed and suitably referenced below. The results of tests shall be recorded on suitable forms (See Appendix J, p. 177) and filed as the regulatory agency shall direct.

TEST 1
INDICATING THERMOMETERS--TEMPERATURE ACCURACY

Reference.--Item 16p(cE).

Application.--To all indicating thermometers used for measurement of milk temperature during pasteurization, including airspace thermometers.

Frequency.--Upon installation and once each 3 months thereafter.

Criteria.--Within 0.25ºC (0.5ºF) for pasteurization thermometers and 0.5ºC (1ºF) for airspace thermometers, plus or minus, in a specified scale range.

Apparatus.--

1. Test thermometer meeting specifications under Appendix F, Part 1.
2. Water or oil bath and agitator.
3. Suitable means of heating water or oil bath.

Method.--Both thermometers exposed to a water or oil medium of uniform temperature. Indicating thermometer reading is compared to the reading of the test thermometer.

Procedure.--

1. Prepare 38 liters (10 gallons) of water in a milk can or a quantity of oil in an oil bath by raising the temperature of the water or oil to within a range of 2ºC (3ºF) of the appropriate pasteurization temperature or airspace temperature.
2. Remove heat source and agitate water or oil bath rapidly.
3. Continue agitation. Insert indicating test thermometer to indicated immersion point during the test.

4. Compare both thermometer readings at the temperature reading within the test range.

5. Repeat comparison of readings.

6. Record thermometer readings, and thermometer identification or location.

Corrective Action.--Do not run test if mercury column has been split or capillary tube is broken, as thermometer should be returned to the factory for repair. When the indicating thermometer differs from the test thermometer by more than 0.25°C (0.5°F) and the airspace thermometer by more than 0.5°C (1°F), the scale plate of the indicating thermometer should be adjusted to agree with the test thermometer. Retest the thermometer after adjustment.

TEST 2.
RECORDING THERMOMETERS--TEMPERATURE ACCURACY

Reference.--Item 16p(C).

Application.--To all recording and recorder/controller thermometers used to record milk temperatures during pasteurization.

Frequency.--Upon installation, at least once each 3 months and whenever the recording pen-arm setting requires frequent adjustment.

Criteria.--Within 0.5°C (1°F), plus or minus, in specified scale range.

Apparatus.--Pasteurizer indicating thermometer previously tested against a known accurate thermometer, three 38 liters (10-gallon) milk cans or suitable vats or containers, agitator, suitable means of heating water baths and ice.

Method.--The testing of a recording thermometer for temperature accuracy involves the determination of whether or not the temperature pen-arm will return to within 0.5°C (1°F), of its previous setting, after exposure to boiling water and melting ice.

Procedure.--

1. Adjust the recording pen to read exactly as the previously tested indicating thermometer, in the temperature range for the pasteurization process being used after a stabilization period of 5 minutes (two minutes for electronic recording thermometers) at a constant temperature. The water bath shall be rapidly agitated throughout the stabilization period.

2. Prepare one water bath by heating to the boiling point and maintain temperature. Prepare a second container with melting ice. Place water baths within working distance of the recorder sensing element.

3. Immerse the sensing element of the recorder in boiling water for not less than 5 minutes (two minutes for electronic recording thermometers).

4. Have a can of water adjusted to a temperature within the testing range for the pasteurization process being used.

5. Remove the sensing element from the boiling water and immerse in water at a temperature within the testing range for the pasteurization process being used. Allow a 5-minute (two minutes for electronic recording thermometers) stabilization period for both indicating and recording thermometers. Compare readings of 0.5°C (1°F) plus or minus, the indicator thermometer reading.

6. Remove sensing element from the bath, at operating temperatures, and immerse in melting ice for not less than 5 minutes (two minutes for electronic recording thermometers).

7. Remove sensing element from the ice water and immerse in water at a temperature, within the testing range, for the pasteurization process being used. Allow a 5-minute (two minutes for electronic recording thermometers) stabilization period for both indicating and recording thermometers. Compare readings of 0.5°C (1°F), plus or minus, the indicator thermometer reading.

8. Record results.

Corrective Action.--If the pen does not return to 0.5°C (1°F), plus or minus, of indicating thermometer reading, the recording thermometer should be repaired.

Note.-When this test is performed on recorder/controllers, used with HHST pasteurization systems, an oil bath shall be substituted for the boiling water in step 3. above. The temperature of the oil bath shall be such that the temperature sensing element of the recorder/controller system is raised to a temperature above that which the recorder/controller is capable of sensing.

TEST 3.
RECORDING THERMOMETERS--
TIME ACCURACY

Reference.--Item 16p(C).

Application.--To all recording and recorder/controller thermometers used to record time of pasteurization.

Frequency.--Upon installation and at least once each 3 months thereafter.

Criteria.--The recorded time of pasteurization shall not exceed the true elapsed time.

Apparatus.--

1. A watch, graduated at intervals not to exceed 1 minute, and accurate to within 5 minutes in 24 hours.

2. A pair of dividers, or any other suitable device for measuring short distances.

Method.--Comparison of the recorded time over a period of not less than 30 minutes with a watch of known accuracy. For recorders utilizing electric clocks, check the cycle on the face plate of clock with a known cycle; observe that the clock is in operating condition.

Procedure.--

1. Determine if chart is appropriate to recorder.

2. Inscribe reference mark at the pen point on the recorder chart at the start of the holding period and record the time.

3. At the end of 30 minutes by the watch, inscribe a second reference mark at the pen point position on the chart.

4. Determine the distance between the two reference marks and compare the distance with the time-scale divisions on the record chart at the same temperature.

5. For electric clocks, remove face plate, compare cycle specification on face plate with the current cycle utilized.

6. Enter finding on chart and initial and record results.

Corrective Action.--If recorded time is incorrect, the clock should be adjusted or repaired.

TEST 4.
RECORDING THERMOMETERS--
CHECK AGAINST
INDICATING THERMOMETERS

Reference.--Item 16p(B).

Application.--To all recording and recording/controller thermometers used to record milk temperatures during pasteurization.

Frequency.--At least once each 3 months by regulatory agency; daily by plant operator.

Criteria.--Recording thermometer shall not read higher than corresponding indicating thermometer.

Apparatus.-- No supplementary materials required.

Method.--This test requires only that the reading of the recording thermometer be compared with that of the indicating thermometer at a time when both are exposed to milk at a stabilized pasteurization temperature.

Procedure.--

1. While milk is at a stabilized pasteurization temperature, read indicating thermometer.
2. Immediately inscribe on the recording thermometer chart a line intersecting the recorded temperature arc at the pen location, record on the chart the indicating thermometer temperature and initial.
3. Record results.

Corrective Action.--If recording thermometer reads higher than indicating thermometer, the pen should be adjusted by the operator.

TEST 5. FLOW-DIVERSION DEVICE-- PROPER ASSEMBLY AND FUNCTION

Reference.--Item 16p(C).

Application.--To all flow-diversion devices used with continuous-flow pasteurizers.

Frequency.--Upon installation and at least once each 3 months thereafter.

Criteria.--The flow-diversion device shall function correctly in operating situations and shall de-energize the metering pump in the event of malfunction or incorrect assembly.

1. LEAKAGE PAST VALVE SEAT(S)

Apparatus.--Suitable tools for the disassembly of flow-diversion device and sanitary piping.

Method.--Observe the valve seat(s) of the flow-diversion device for leakage.

Procedure.--With the system operating with water, place the flow-diversion device in diverted-flow position. Disconnect the forward flow piping and observe the valve seat for leakage. Check leak escape ports to see if they are open.

Corrective Action.--If leakage is noted, device must be dismantled and defective gaskets replaced or other suitable repairs made.

2. OPERATION OF VALVE STEM(S)

Apparatus.--Suitable tools for the disassembly of flow-diversion device and sanitary piping.

Method.--Observe flow-diversion device valve stem(s) for ease of movement.

Procedures.--When a stem packing nut is used, tighten stem packing nut as much as possible. Operate system and place device in forward and diverted flow sev-

eral times. Note freedom of action of valve stem.

Corrective Action.--If valve action is sluggish, suitable adjustment or repair shall be made to permit stem to act freely in all positions, with packing nut, when used, fully tightened.

3. DEVICE ASSEMBLY--SINGLE STEM DEVICE

Apparatus.--Sanitary fitting wrench.

Method.--Observe function of metering pump when flow-diversion device is properly assembled.

Procedures.--

a. With HTST system in operation, unscrew by one-half turn, the 13H hex nut which holds the top of the valve to the valve body. This should de-energize the metering pump. This test should be run with no piping connected to the forward flow port of the device since there can be sufficient force from the piping to keep the forward flow port tightly clamped even though the hex nut is loosened.

b. With the HTST system in operation and the flow-diversion device in the diverted position, remove the connecting key located at the base of the valve stem. The metering pump should be de-energized.

Corrective Action.--If metering pump fails to respond as indicated, immediate checks of the device assembly and wiring are required to locate and correct the cause.

4. DEVICE ASSEMBLY, DUAL STEM DEVICE

Apparatus.--None.

Method.--Observe function of metering pump when flow-diversion device is properly assembled.

Procedures.--

a. With the device in diverted-flow, when the flow-diversion device is properly assembled.

b. Move the device to the forward-flow position and disconnect stem from actuator.

c. Move the device to the diverted-flow position and turn on the metering pump. The metering pump should not run.

d. Reassemble the device by moving it to the forward-flow position and reconnecting the stem to the actuator.

e. Move the device to the diverted-flow position and replace the actuator clamp.

f. Repeat the procedure for the other actuator.

Corrective Action.--If metering pump fails to respond as indicated, an immediate check of the device assembly and wiring is required to locate and correct the cause.

5. MANUAL DIVERSION

(when booster pump is installed in the HTST system)

Apparatus.--None.

Method.--Observe the response of the system to manual diversion.

Procedure.--

a. With the HTST system in operation and the flow-diversion device in the forward-flow position, press the manual diversion button. This should (a) cause the valve to assume the divert position, and (b) de-energize the booster pump. The pressure differential between raw and pasteurized milk in the regenerator should be maintained.

b. Operate the HTST system at its maximum operating pressure and activate the manual divert button. Confirm that the spring tension of the flow-diversion device is still capable of diverting the system at maximum operating pressure.

c. Operate the HTST system in forward flow and activate the manual divert button until the raw pressure reaches zero (0) psi. Deactivate the manual divert button and observe the raw milk and pasteurized milk pressures. The pressure differential between raw and pasteurized milk in the regenerator should be maintained.

Corrective Action.--If the above described actions do not occur when procedures a, b and c are performed, or the necessary pressure differential between raw and pasteurized milk is not maintained, the assembly and wiring of the HTST system must be immediately reviewed and the indicated deficiencies corrected or proper adjustments made.

6. RESPONSE TIME

Apparatus.--Stopwatch. The stopwatch should be used to determine that the response time interval does not exceed 1 second.

Method.--Determine the elapsed time between the instant of the activation of the control mechanism at cut-out temperature on declining temperature and the instant the flow-diversion device takes the fully diverted-flow position.

Procedure.--

a. With the water or oil bath at a temperature above cut-out temperature, allow the water or oil to cool gradually. At the moment the cut-out mechanism is activated, start the watch and the moment the flow-diversion device takes the fully-diverted position, stop the watch.

b. Record results.

Corrective Action.--Should response time exceed 1 second, immediate corrective action must be taken.

7. TIME DELAY INTERLOCK WITH METERING PUMP

Application.--To dual stem flow-diversion devices with a manual forward-flow switch.

Apparatus.--None.

Method.--Determine that the device does not assume a manually induced forward-flow position, while the metering pump is running.

Procedure.--With the system running in forward flow, move the control switch to the "Inspect" position and observe that the

following events automatically occur in sequence:

a. The device immediately moves to the diverted-flow position and the metering pump is turned off.

b. The device remains in the diverted-flow position while the metering pump is running down.

c. After the metering pump stops turning, the device assumes the forward-flow position.

d. Repeat the above procedure by moving the control switch to the cleaned-in-place (CIP) position.

e. Record test results and seal the control enclosure.

Corrective Action.--If the above sequence of events does not occur, either a timer adjustment or wiring change is required.

8. CIP TIME DELAY RELAY

Application.--To all HTST pasteurizer systems in which it is desired to run the timing pump and/or other flow promoting devices during the CIP cycle.

Frequency.--Upon installation and semiannually thereafter, or whenever the seal on the time delay relay is broken.

Criteria.--When the mode switch on the flow diversion device is moved from process product to CIP, the flow diversion device shall move immediately to the diverted position and remain in the diverted position for at least 10 minutes before starting its normal cycling in the CIP mode. Simultaneously, the booster pump shall be turned off and shall not run during the 10 minute time delay.

Apparatus.--Stopwatch.

Method.--Adjust set point on the time delay relay equal to or greater than 10 minutes.

Procedure.--

a. Operate pasteurizer in forward flow, with the mode switch on the flow diversion device in the process product position, at a flow rate below the Flow Alarm set point and above the Loss-of-Signal Alarm set point, using water above pasteurization temperature.

b. Move the mode switch on the flow diversion device to the CIP position. The flow diversion device should move immediately to the diverted position and the booster pump should stop running. Start the stopwatch when the flow diversion device moves to the diverted position.

c. Stop the stopwatch when the flow diversion device moves to the forward position for its initial cycle in the CIP mode. The booster pump may start at this time.

d. Record results for the office record.

e. Install and seal enclosure over the time delay relay.

Corrective Action.--If the flow diversion device does not remain in the diverted position for at least 10 minutes after the mode switch is moved from process product to CIP, increase the set point on the time delay relay and repeat this test procedure. If the booster pump runs at any time during the 10 minute delay, the booster pump wiring is in need of repair.

TEST 6.
LEAK PROTECTOR VALVE

Reference.--Item 16p(E).

Application.--To all pasteurizer inlet and outlet valves.

Frequency.--Upon installation and at least once each 3 months thereafter.

Criteria.--No leakage of milk past the valve seat in any closed position.

Apparatus.--No supplementary materials required.

Method.--By observing when the piping is disconnected from the valve outlet whether or not leakage past the valve seat occurs when milk pressure is exerted against the upstream face of the valve.

Procedure.--

1. During normal operation, while milk pressure is exerted against the valve inlet, fully close the valve and disconnect the outlet piping. (Caution: Care must be taken to avoid contamination of the valves or the piping.)
2. Observe whether or not any milk is leaking past the valve seat into the valve outlet.
3. In the case of plug-type valves, turn the valve to the just-closed position, and examine the leakage into the valve outlet.
4. Reconnect the outlet piping.
5. Record identity of the valve, and findings, for the office record.

Corrective Action.--If leakage past the valve seat should occur in any closed position, the valve plug should be reground, gaskets replaced, springs replaced or other necessary steps be taken to prevent leakage.

TEST 7.
INDICATING THERMOMETERS ON PIPELINES-- THERMOMETRIC RESPONSE

Reference.--Item 16p(C).

Application.--To all indicating thermometers located on pipelines and used for determination of milk temperatures during pasteurization.

Frequency.--Upon installation and once each 3 months thereafter.

Criteria.--Four seconds under specified conditions.

Apparatus.--Test thermometer, stopwatch, water bath 38 liter (10-gallon) can, agitator, heat supply and indicating thermometer from pasteurizer.

Method.--By measuring the time required for the reading of the thermometer being tested to increase 7ºC (12ºF) through a specified temperature range (temperature range must include pasteurization temperature). The temperature used in the water or oil bath will depend upon the scale range of the thermometer to be tested.

Procedure.--

1. Immerse indicating thermometer in water or oil bath heated to a temperature at least 11ºC (19ºF) higher than minimum scale reading on the indicating thermometer. Bath temperature should be higher than maximum pasteurization temperature for which thermometer is used.
2. Immerse indicating thermometer in bucket of cold water for several seconds to cool it.

Note.--Continuous agitation of water baths during the performance of steps 3, 4 and 5 is required. Elapsed time between end of step 1 and beginning of step 3, should not exceed 15 seconds so the hot water bath does not cool significantly.

3. Insert indicating thermometer in hot water or oil bath to proper bulb immersion depth.

4. Start stopwatch when indicating thermometer reads 11°C (19°F) below bath temperature.

5. Stop stopwatch when indicating thermometer reads 4°C (7°F) below bath temperature.

6. Record thermometric response time for office record.

Example.--For a thermometer used at pasteurization temperature set points of 71.7°C (161°F) and 74.4°C (166°F), a water bath at a temperature of 78.3°C (173°F) could be used. 10.6°C (19°F) lower than 78.3°C (173°F) water bath would be 67.8°C (154°F); 3.9°C (7°F) lower than 78.3°C (173°F) water bath would be 74.4°C (166°F). Hence, after immersing the thermometer, which has been previously cooled, in the 78.3°C (173°F) bath, the stopwatch is started when the thermometer reads 67.8°C (154°F) and stopped when it reads 74.3°C (166°F).

NOTE.--The test included the pasteurization temperature set points of 71.7°C (161°F) and 74.4°C (166°F). If the pasteurization temperature set points had been 71.7°C (161°F) and 79.4°C (175°F), it would not have been possible to include both set points within a 6.7°C (12°F) span. With these set points the test would have to be done separately for each set point.

Corrective Action.--If the response time should exceed 4 seconds, the thermometer should be replaced or returned for repair.

TEST 8. RECORDER/CONTROLLER-- THERMOMETRIC RESPONSE

Reference.--Item 16p(C).

Application.--To all recorder/controllers, used in connection with continuous-flow pasteurizers, except those in which the flow-diversion device is located at the end of the cooler section.

Frequency.--Upon installation and at least once each 3 months thereafter.

Criteria.--Five seconds, under specified conditions.

Apparatus.--Previously tested indicating thermometer (on pasteurizers), stopwatch, water or oil bath, (38 liters or 10-gallon milk can), agitator and heat supply.

Method.--Measure the time interval between the instant when the recording thermometer reads 7°C (12°F) below the cut-in temperature and the moment of cut-in by the controller. This measurement is made when the sensing element is immersed in a rapidly agitated water or oil bath maintained at exactly 4°C (7°F) above the cut-in temperature.

Procedure.--

1. Check and, if necessary, adjust the pen-arm setting of the recording thermometer in the proper reference to agree with the indicating thermometer reading at pasteurization temperature.

2. Determine the cut-in temperature of controller (Test 10, p. 126), either while in normal operation or by using a water or oil bath.

3. Remove sensing element and allow to cool to room temperature.

4. Heat water or oil bath to exactly 4°C (7°F) above the cut-in temperature, while vigorously agitating bath to insure uniform temperature.

5. Immerse recorder/controller bulb in bath. Continue agitation during items 6. and 7. below.

6. Start stopwatch when the recording thermometer reaches a temperature of 7°C (12°F) below the cut-in temperature.

7. Stop stopwatch when the controller cuts in.

8. Record thermometric response time for office record.

Corrective Action.--If the response time should exceed 5 seconds, the recorder/controller should be repaired.

TEST 9.
SETTING OF CONTROL SWITCHES--REGENERATOR PRESSURE

Reference.--Items 16p(B),(C) and (E).

1. PRESSURE SWITCHES.--Used to control operation of booster pumps.

Application.--To all pressure switches controlling the operations of booster pumps on HTST pasteurizer systems employing regenerators.

Frequency.--Upon installation, each 3 months thereafter, after any change in the booster pump or the switch circuit and/or whenever the pressure switch seal is broken.

Criteria.--The pump shall not operate unless there is at least a 6.9 kPa (1-pound) pressure differential on the pasteurized milk side of the regenerator.

Apparatus.--Sanitary pressure gauge and pneumatic testing device, for checking and adjusting pressure switch settings.

A simple inexpensive pneumatic testing device may be made from a discarded 50 millimeter (2 inch) - 7BX sanitary tee, with two additional 13H nuts, one of which is provided with a 16A cap, drilled and tapped for a 13 millimeters (1/2-inch) galvanized iron nipple for the air connection. A hose connection is made to a compressed air source in the plant by means of a snap-on fitting. The air pressure can be controlled by an inexpensive pressure reducing valve (range [0-60] psig) followed by a 13 millimeters (1/2 inch) globe type bleeder valve connected into the side outlet of a 13 millimeters (1/2-inch) tee installed between the pressure reducing valve and the testing device. The pressure switch to be tested is disconnected from the pasteurizer and connected to another of the outlets of the sanitary tee, and the pressure gauge is connected to the third outlet of the sanitary tee. By careful manipulation of the air pressure reducing valve and the air bleeder valve, the air pressure in the testing device may be regulated slowly and precisely. (In operating the device, care should be taken to avoid exposing the pressure switch and the sanitary pressure gauge to excessive pressure which might damage them. This can be done by first closing off the air pressure regulating valve and opening fully the bleeder valve; these may then be manipulated slowly to bring the air pressure in the testing device within the desired range.) A test light of proper voltage can be placed in series with the pressure switch contact and in parallel with the electrical load (booster pump starter) so the actuation point may be readily determined.

Method.--Check and make adjustment of pressure switch so as to prevent the operation of the booster pump unless the

pressure of the pasteurized milk side of the regenerator is greater by at least 6.9 kPa (1 psi) than any pressure that may be generated on the raw side.

Procedure.--

a. Determine maximum pressure of the booster pump.

(1) Install sanitary pressure gauge in tee at discharge of booster pump.

(2) Operate the pasteurizer with water; with the flow-diversion device in forward-flow position, the metering pump operating at minimum speed possible and the booster pump operating at its rated speed. If vacuum equipment is located between the raw outlet from the regenerator and the metering pump, it should be bypassed while this determination is made.

(3) Note maximum pressure indicated by pressure gauge under these conditions.

b. Check and set the pressure switch.

(1) Install a sanitary pressure gauge of known accuracy on the pneumatic testing device to which the pressure switch sensing element should also be connected.

(2) Remove the seal and cover to expose adjustment mechanism on pressure switch.

(3) Operate the testing device and determine the pressure gauge reading at the cut-in point of the pressure switch which will light the test lamp. (If the switch is short circuited, the lamp will be lighted before air pressure is applied.)

(4) The cut-in point should be adjusted, if necessary, so as to occur at a pressure gauge reading at least 6.9 kPa (1 psi) greater than the maximum booster pump operating pressure, as determined under Section a. of this procedure. Where adjustment is necessary, refer to the manufacturer's instructions for adjusting procedures. After adjustment, recheck actuation point and readjust if necessary.

(5) Replace cover, seal the pressure switch and restore sensing element to original location.

(6) Record test results for the office record.

2. TIME DELAY SWITCHES.--Used to control operation of booster pumps.

Application.--To all time-delay switches controlling the operation of the booster pump(s).

Frequency.-- Upon installation, after any change in the pump or relay circuit and whenever the seal is broken.

Criteria.--The booster pump shall not operate until the pasteurized milk has achieved a pressure at least 6.9 kPa (1 pound) greater than the maximum pressure developed by the booster pump.

Apparatus.--Accurate stopwatch, graduated at intervals not to exceed 0.2 of 1 second, pressure gauge or manometer.

Method.--Reference: Dashiel, W.N., *Use of Time Delay Relay To Control Booster Pump Operation.* Journal of Milk and Food Technology, 21:7. July 1958.

Procedure.--

a. Operate the pasteurizers with water; with the flow-diversion device in the forward-flow position, the metering pump operating at minimum speed and the booster pump at rated speed. Vacuum equipment is not operating or is bypassed.

b. Determine the maximum pressure developed at the discharge of the

booster pump. Following the determination of the height of the liquid level, add at least 1 Meter (3 feet) to provide the 6.9 kPa (1-pound) pressure differential equivalent of 238 millimeters (0.7 feet) of water column to compensate for difference in the specific gravity between water at 72°C (161°F) and raw milk at 4°C (40°F). The pasteurized liquid level must rise to the computed elevation, above the outlet level of the booster pump, and be vented to the atmosphere at this or higher level.

c. Time the interval from the moment the forward flow is established until the pasteurized liquid level rises to the required elevation. The time measurement shall be made at the beginning of a run when no water is in the pasteurized product line. The booster pump shall not be operating.

d. The time delay relay shall be installed in the circuit and interlocked with the metering pump, forward-flow of the flow-diversion device and the booster pump. Adjust the time delay setting to provide the time interval. Check the setting several times. Seal the time delay relay.

e. Record for permanent office record.

Corrective Action.--Adjust pasteurized milk pipe to proper elevation. If time delay relay is not accurate, return for repair.

3. PRESSURE GAUGES.--Used with booster pump operations.

Application.--To all required pressure gauges used to measure relative raw milk and pasteurized milk pressure in HTST regenerators.

Frequency.--Upon installation, each 3 months thereafter and whenever the gauges are adjusted or repaired.

Criteria.--Required pressure gauges shall be accurate.

Apparatus.--Identical testing device used to check proper operation of pressure switch (Test 9, 1, p. 121).

A pressure gauge of known accuracy is connected to one outlet of the test apparatus. The gauge being checked is connected to the second outlet of the sanitary tee. Air is bled into the system through the third outlet and comparative readings made. Record test results for office record.

Corrective Action.--Inaccurate gauges should be returned to the factory for repair. It is not recommended that the plant operator attempt the adjustment of pressure gauges.

4. DIFFERENTIAL PRESSURE CONTROLLER

Application.--To all differential pressure controllers used to control the operation of booster pumps on HTST and HHST systems, or used to control the operation of flow-diversion devices on HHST systems, when no vacuum breaker is located downstream from the holding tube.

Frequency.--Upon installation, each 3 months thereafter and whenever the differential pressure controller is adjusted or repaired.

Criteria.--The booster pump shall not operate, or the pasteurizer shall not operate in forward flow, unless the product pressure in the pasteurized side of the regenerator is at least 6.9 kPa (1 psi) greater than the product pressure in the raw side of the regenerator. When the differential pressure controller is used to control the flow-diversion device on HHST systems, and

improper pressure occurs in the regenerator, the flow-diversion device shall move to the diverted-flow position and remain in diverted flow until proper pressures are re-established in the regenerator and all product-contact surfaces between the holding tube and flow-diversion device have been held at or above the required pasteurization temperature, continuously and simultaneously for at least the required pasteurization time, as defined in Definition P of this *Ordinance*.

Apparatus.--A sanitary pressure gauge and a pneumatic testing device, described under PRESSURE SWITCHES (Test 9,1, p. 121) above can be used for checking and adjusting the differential pressure switch setting.

Method.--The differential pressure switch is checked and adjusted to prevent the operation of the booster pump, or prevent forward flow, unless the product pressure in the pasteurized side of the regenerator is at least 6.9 kPa (1 psi) greater than the pressure in the raw side of the regenerator.

Procedures.--

a. Loosen the process connection at both pressure sensors and wait for any liquid to drain through the loose connections. Both pointers should be within 3.5 kPa (0.5 psi) of .0 kPa (0 psig). If not, adjust pointer(s) to read 0 kPa (0 pounds psig).

b. Remove both sensors from the process and mount them in a tee, either at the discharge of the booster pump, or connected to the pneumatic testing device. Note the separation between the two pointers. The change in elevations of the sensors will have caused some change in the zero readings. Turn on the booster pump switch and depress the test push button to operate the booster pump. If the pneumatic testing device is used in lieu of the booster pump, adjust air pressure to the normal operating pressure of the booster pump. Note that the pointer separation is within 6.9 kPa (1 psi) of that observed before pressure was applied. If not, the instrument requires adjustment or repair.

c. For mechanically operated pressure controllers, return the pressure sensors to their normal process locations and turn off the booster pump switch. Manually move and hold the white pointer (raw side of the regenerator) at the normal operating pressure of the booster pump. Press the test push button while manually moving the orange pointer (pasteurized side of the regenerator) upscale until the pilot light turns on, then slowly move the orange pointer downscale until the pilot light turns off. The pilot light should not turn on until the orange pointer is at least 14 kPa (2 psi) higher than the white pointer, and the pilot light should turn off when the orange pointer is no less than 14 kPa (2 psi) higher than the white pointer. If necessary, adjust the differential setting. The 14 kPa (2 psi) differential, represents the sum of the 6.9 kPa (1 psi) differential required between raw and pasteurized product in the regenerator, plus the 6.9 kPa (1 psi) imprecision permitted between the two pressure sensors.

For electrically operated digital pressure controllers, remove the pasteurized side pressure sensor from the tee and return it to its proper position on the press. Cap the open end of the tee and the raw side pressure switch mounting opening on the press. With no pressure on the tee, start the HTST unit running with water. Heat the unit up until forward flow is achieved. The booster pump should be running. Gradually increase the pneumatic pressure on the tee. The rate of increase should not exceed 6.9 kPa (1 psi) per 5 seconds at the set point ± 34.5 kPa (5psi). When the pressure on the raw milk sensor reaches no more than 6.9 kPa (1 psi) less than that indicated for the pasteurized milk sensor,

the booster pump should stop and the green indicator light on the pressure differential controller should go out and the red indicator light should be on.

Note: This test may also be completed using a pneumatic testing device capable of producing differential pressures on the probes. This device should be capable of performing and be operated in a manner so as to duplicate the conditions described above.

d. Seal the instrument and record the test results for the office record.

5. BOOSTER PUMPS--PROPER WIRING

Application.--To all booster pumps used for HTST systems with positive displacement metering pumps.

Criteria.--The booster pump shall be wired so it cannot operate if the flow-diversion device is in the diverted position; if the metering pump is not in operation; and if the pasteurized product pressure in the regenerator does not exceed, by at least 6.9 kPa (1 psi), the product pressure in the raw side of the regenerator.

Apparatus.--A sanitary pressure gauge and pneumatic testing device (as described in Test 9, 1, p. 121) and water with a heat source.

a. INTERWIRED WITH FLOW-DIVERSION DEVICE

Method.--Determine if the booster pump stops by dropping the temperature and causing the flow-diversion device to divert.

Procedures.--

(1) Connect pasteurization pressure sensor to testing tee with the other end of the tee capped. Turn on the air supply to provide an adequate pressure differential. Place the recorder/controller probe in hot water, which is above the cut-in temperature, and turn on the metering pump. (Caution: If there is water in the HTST system, ensure that the recorder/controller probe and pasteurized pressure sensor ports are capped, before the metering pump is turned on). At this time, the booster pump should start to run.

(2) Remove the recorder/controller probe from the hot water. When the flow-diversion device moves to the diverted flow position, the booster pump must stop. Ensure that the pressure differential remains adequate and the metering pump continues to operate.

(3) Record the test results for office records.

Corrective Action.--If the booster pump fails to stop when the flow-diversion device is in the diverted flow position, have the plant maintenance personnel check the wiring and correct the cause.

b. INTERWIRED WITH THE PRESSURE DIFFERENTIAL CONTROLLER

Method.--Determine if the booster pump stops when the pressure differential is not properly maintained in the regenerator.

Procedure.--

(1) Put the recorder/controller probe back in the hot water. Once the flow-diversion device goes back into forward flow, the booster pump will operate.

(2) Decrease the air supply to the testing tee until the pressure is less than 14 kPa (2 psi) of the pressure on the raw milk pressure sensor. The booster pump must stop. Ensure that the flow-diversion device remains

in the forward flow position and the metering pump continues to operate.

(3) Record test results for the office records.

Corrective Action.--If the booster pump fails to stop when the pressure differential is not maintained, have the plant maintenance personnel determine and correct the cause.

c. INTERWIRED WITH THE METERING PUMP

Method.--Determine if the booster pump stops when the metering pump is off.

Procedure.--

(1) Apply air pressure to the testing tee so that the pressure exceeds by at least 14 kPa (2 psi) the pressure on the raw milk pressure sensor. The booster pump should start running.

(2) Turn off the metering pump. The booster pump must stop. Ensure that the pressure differential remains adequate and the flow-diversion device remains in the forward flow position.

Corrective Action.--If the booster pump fails to stop when the metering pump has been turned off, have the plant maintenance personnel determine and correct the cause.

TEST 10. MILK-FLOW CONTROLS-- MILK TEMPERATURE AT CUT-IN AND CUT-OUT

References.--Item 16p(A), 16p(C).

Milk-flow controls shall be tested for milk temperature at cut-in and cut-out by one of the following applicable tests at the frequency prescribed:

1. HTST PASTEURIZERS

Application.--All recorder/controllers used in connection with HTST pasteurizers, except those in which the flow-diversion device is located at the end of the cooler section.

Frequency.--Upon installation and quarterly by the regulatory agency; daily by the plant operator.

Criteria.--No forward flow until pasteurization temperature has been reached. Flow diverted before temperature drops below minimum pasteurization temperature.

Apparatus.--No supplemental materials needed.

Method.--By observing the actual temperature of the indicating thermometer at the instant forward flow starts (cut-in) and stops (cut-out).

Procedure.--

a. Cut-in temperature.

(1) While milk or water is completely flooding the sensing element of the recorder/controller and the indicating thermometer, increase the heat gradually so as to raise the temperature of the water or milk at a rate not exceeding 0.5°C (1°F) every 30 seconds.

(2) Observe the indicating thermometer reading at the moment the forward flow starts (i.e., flow-diversion device moves). Observe that the frequency pen

reading is synchronized with the recording pen on the same reference arc.

(3) Record the indicating thermometer reading on the recorder chart and initial. The regulatory agency shall record test findings.

b. Cut-out temperature.

(1) After the cut-in temperature has been determined, and while the milk or water is above the cut-in temperature, allow the water to cool slowly at a rate not exceeding (0.5°C) 1°F per 30 seconds. Observe the indicating thermometer reading at the instant forward flow stops.

(2) Record the indicating thermometer reading on the recorder chart and initial.

Corrective Action.--Should the reading be below the minimum pasteurization temperature, the cut-in and cut-out mechanism and/or the differential temperature mechanism should be adjusted to obtain proper cut-in and cut-out temperatures by repeated tests. When compliance is achieved, seal the controller mechanism.

2. HHST PASTEURIZERS INDIRECT HEATING

Application.-- All HHST pasteurizers using indirect heating.

Frequency.--Upon installation; and every 3 months thereafter; and whenever the thermal controller seal is broken.

Criteria.--The pasteurizer shall not operate in forward flow unless pasteurization temperature has been achieved. The product flow shall be diverted at a temperature no lower than the chosen pasteurization standard.

Apparatus.--No supplemental materials needed.

Method.--The cut-in and cut-out temperatures are determined by observing the actual temperature in the constant temperature bath at which the two sensing elements signal for forward flow (cut-in) and diverted flow (cut-out).

Procedures.--

a. Wire the test lamp in series with the control contacts of the sensing element (holding tube). Immerse this sensing element in the constant temperature bath. Raise the bath temperature at a rate not exceeding 0.5°C (1°F) every 30 seconds. Observe the temperature reading at the cut-in temperature. Record the temperature for the office record.

b. After the cut-in temperature has been determined and while the bath is above the cut-in temperature, allow the bath to cool slowly at a rate not exceeding 0.5°C (1°F) per 30 seconds. Observe the temperature reading on the controller when the test lamp goes out (cut-out temperature). Determine that the cut-out temperature on the thermal limit controller is equivalent to or greater than the chosen pasteurization standard. Where adjustment is necessary, refer to the manufacturer's instructions. After adjustment, repeat the procedure above, and when the results are satisfactory, record the results for the office records.

c. Repeat the procedure for the other sensing element, (flow-diversion device). When proper cut-out temperature has been verified for both sensing elements, seal the controller system.

3. HHST PASTEURIZERS--DIRECT HEATING

Application.-- All HHST pasteurizers using direct contact heating.

Frequency.--Upon installation; every 3 months thereafter; and whenever the thermal limit controller seal is broken.

Criteria.--The pasteurizer shall not operate in forward flow unless pasteurization temperature has been achieved. The product flow shall be diverted at a temperature no lower than the chosen pasteurization standard.

Apparatus.--No supplemental materials needed.

Method.--The cut-in and cut-out temperatures are determined by observing the actual temperature in the constant temperature bath at which each of the three sensing elements signals for forward flow (cut-in) and diverted flow (cut-out).

Procedures.--

a. Wire the test lamp in series with the control contacts of the sensing element (the holding tube). Immerse this sensing element in the constant temperature bath. Raise the bath temperature at a rate not exceeding 0.5°C (1°F) every 30 seconds. Observe the temperature reading on the controller when the test lamp lights (cut-in temperature). Record the temperature for the office record.

b. After the cut-in temperature has been determined, and while the bath is above the cut-in temperature, allow the bath to cool slowly at a rate not exceeding 0.5°C (1°F) per 30 seconds. Observe the temperature reading on the controller when the test lamp goes out (cut-out temperature). Determine that the cut-out temperature, on the thermal limit controller, is equivalent to or greater than the chose pasteurization standard. Where adjustment is necessary, refer to the manufacturer's instructions. After adjustment, repeat the procedure above and when the results are satisfactory, record the results for the office record.

c. Repeat the procedure for the other two sensing elements, i.e., the vacuum chamber and flow-diversion device. Rewire the test lamp in series with the control contacts from each sensing element, respectively. When proper cut-out temperatures have been verified for all three sensing elements, seal the controller system.

TEST 11.
CONTINUOUS FLOW HOLDERS--HOLDING TIME

Reference.--Item 16p(A).

Continuous flow holders shall be tested for holding times by one of the applicable tests.

1. HTST PASTEURIZERS

Application.--To all HTST pasteurizers employing a holding time of 15 seconds or longer.

Frequency.--Upon installation; semiannually thereafter; whenever the seal on the speed setting is broken; any alteration is made affecting the holding time, the velocity of the flow (such as, replacement of pump, motor, belt, drive or driven pulleys, or decrease in number of HTST plates or the capacity of holding tube); or whenever a check of the capacity indicates a speedup.

Criteria.--Every particle of milk shall be held for at least 15 seconds in both the forward- and diverted-flow positions.

Apparatus.--Electrical conductivity measuring device, capable of

detecting change in conductivity, equipped with standard electrodes; table salt (sodium chloride); 50 ml. syringe; stopwatch; and suitable container for salt solution.

Method.--The holding time is determined by timing the interval for an added trace substance to pass through the holder. Although the time interval of the fastest particle of milk is desired, the conductivity test is made with water. The results found with water are converted to the milk flow time, by formulation, since a pump may not deliver the same amount of milk as it does water.

Procedure.--

a. Examine the entire system to insure that all flow promoting equipment is operating at maximum capacity and all flow impeding equipment is so adjusted or bypassed as to provide the minimum of resistance to the flow. There shall be no leakage on the suction side of the timing pump.

b. Adjust variable speed pump to its maximum capacity (preferably with a new belt and full size impellers). Check homogenizers for seals, and/or gears or pulley identification.

c. Install one electrode at the inlet to the holder and the other electrode in the holder outlet. Close the circuit to the electrode located at the inlet to the holder.

d. Operate the pasteurizer, using water at pasteurization temperature, with the flow-diversion device in the forward-flow position.

e. Quickly inject 50 ml. of saturated sodium chloride solution into the holder inlet.

f. Start the stopwatch with the first movement of the indicator of a change in conductivity. Open the circuit to the inlet electrode and close the circuit to the electrode at the outlet of the holder.

g. Stop the stopwatch with the first movement of the indicator of a change in conductivity.

h. Record results.

i. Repeat the test six or more times, until six successive results are within 0.5 seconds of each other. The average of these six tests is the holding time for water in forward flow. When consistent readings cannot be obtained, purge the equipment, check instruments and connections and check for air leakage on the suction side. Repeat tests. Should consistent readings not be obtained, use the fastest time as the holding time for water.

j. Repeat steps d. through i. for the testing time on water in diverted flow.

k. With the pump at the same speed and equipment adjusted as in a. above, time the filling of a 38 liter (10-gallon) can with a measured weight of water, using the discharge outlet with the same head pressure as in normal operation. Average the time of several trials. (Since flow rates of the large capacity units make it very difficult to check by filling a 38 liter (10-gallon) can, it is suggested, that a calibrated tank of considerable size be used.)

l. For all gear driven timing pumps repeat procedure 'k' using milk. For those homogenizers used as timing pumps repeat procedure 'k' using milk when the meaured holding time for water is less than 120% of the legal holding time.

m. Compute the holding time for milk from the following formula by weight, using the average specific gravity. Compute separately for forward flow and diverted flow.

Holding time for milk=
(1.032(TMw)/Ww)(by weight),

in which--

1.032=specific gravity for milk;
T=average holding time for water;
Mw=average time required to deliver a measured weight of milk; and
Ww=average time required to deliver an equal weight of water.

n. Record results for the office record.

Corrective Action.--When the computed holding time for milk is less than that required, either in forward flow or diverted flow, the speed of the timing pump shall be reduced or an adjustment made in the holding tube and the timing test repeated until a satisfactory holding time is achieved. Should an orifice be used, to correct the holding time in diverted flow, there should be no excessive pressure exerted on the underside of the valve seat of the flow-diversion device. Governors shall be sealed on motors that do not provide a constant speed as provided in Item 16p(A)2.f.(2).

2. MAGNETIC FLOW METER SYSTEMS

A. CONTINUOUS FLOW--HOLDING TIME.--

Application.--Magnetic Flow Meter Systems; Continuous Flow and Holding Time.--To all HTST pasteurizers with a Magnetic Flow Meter System, used in lieu of a metering pump.

Frequency.--Upon installation; semiannually thereafter; whenever a seal on the Flow Alarm is broken; any alteration is made affecting the holding time, the velocity of the flow or the capacity of holding tube; or whenever a check of the capacity indicates a speedup.

Criteria.--Every particle of milk shall be held for at least a minimum holding time in both the forward and diverted flow positions.

Apparatus.--Electrical conductivity measuring device, capable of detecting change in conductivity, equipped with standard electrodes; table salt (sodium chloride); 50-ml syringe; stopwatch; and a suitable container for salt solution.

Method.--The holding time is determined by timing the interval for an added trace substance to pass through the holder. Although the time interval of the fastest particle of milk is desired, the conductivity test is made with water. The results found with water are converted to the milk flow time, by formulation, since the system does not delivery the same amount of milk as it does water.

Procedure.--

a. Examine the entire system to insure that all flow promoting equipment is operating at maximum capacity and all flow impeding equipment is so adjusted or bypassed as to provide the minimum resistance to the flow.

b. Adjust the set point on the Flow Alarm to its highest possible setting.

c. Adjust the set point on the Flow Controller to a flow rate estimated to yield an acceptable holding time.

d. Install one electrode at the inlet to the holder and the other electrode to the holder outlet. Close the circuit to the electrode located at the inlet to the holder.

e. Operate the pasteurizer, using water, above the pasteurization temperature, with the flow diversion device in the forward flow position.

f. Quickly inject 50-ml of saturated sodium chloride solution into the holder inlet.

g. Start the stopwatch with the first movement of the indicator of a change in conductivity. Open the circuit to the inlet electrode and close the circuit to the electrode at the outlet of the holder.

h. Stop the stopwatch with the first movement of the indicator of a change in conductivity.

i. Record results.

j. Repeat the test six or more times, until six successive results are within 0.5 seconds of each other. The average of these six tests is the holding time for water in forward flow. When consistent readings cannot be obtained, purge the equipment, check instruments and connections and check for air leakage on the suction side of the pump, located at the raw product supply tank. Repeat tests. If six consecutive readings cannot be achieved within 0.5 seconds, in forward and diverted flow, the pasteurizing system is in need of repair.

k. Repeat steps e. through j. for the testing time on water in diverted flow.

l. With the Flow Controller at the same set point as in c. above, time the filling of a 38 liter (10-gallon) can with a measured weight of water using the discharge outlet, with the same head pressure as in normal operation. Average the time of several trials. (Since flow rates of the large capacity units make it very difficult to check by filling a 38 liter (10-gallon) can, it is suggested that a calibrated tank of considerable size be used.)

m. Record this result for the office record.

Corrective Action.--When the computed holding time for milk is less than that required, either in forward flow or diverted flow, the set point on the Flow Controller shall be decreased, or adjustment made in the holding tube and the timing test repeated until a satisfactory holding time is achieved. Should an orifice be used to correct the holding time in diverted flow, there should be no excessive pressure exerted on the underside of the valve seat of the flow diversion device.

B. CONTINUOUS FLOW HOLDERS--FLOW ALARM

Application.--To all HTST pasteurizers using a Magnetic Flow Meter System, used in lieu of a metering pump.

Frequency.--Upon installation; semiannually thereafter; whenever the seal on the Flow Alarm is broken; any alteration is made affecting the holding time, the velocity of the flow or the capacity of holding tube; or whenever a check of the capacity indicates a speedup.

Criteria.--When flow rate equals or exceeds the value at which the holding time was measured, the Flow Alarm shall cause the flow diversion device to assume the diverted position, even though the temperature of the milk in the holding tube is above pasteurization temperature.

Apparatus.--None.

Method.--Adjust the set point of the Flow Alarm so that flow is diverted when the flow rate equals or exceeds the value at which the holding time was measured.

Procedure.--

a. Operate the pasteurizer in forward flow, at the flow rate at which holding time was measured, using water above the pasteurization temperature.

b. Adjust set point on the Flow Alarm slowly downward until the frequency

pen on the Recorder indicates that flow has been diverted.

c. Observe that the flow diversion device moved to the diverted position, while water passing through the system remained above pasteurization temperature.

d. Record the set point of the Flow Alarm, the occurrence of flow diversion and the temperature of the water in the holding tube, for the office record.

Corrective Action.--If the flow diversion device does not move to the diverted position, when the frequency pen of the recorder indicates a diversion, a modification or repair of the control wiring is required.

C. CONTINUOUS FLOW HOLDERS--LOSS-OF-SIGNAL ALARM

Application.--To all HTST pasteurizers using a Magnetic Flow Meter System, used in lieu of a metering pump.

Frequency.--Upon installation; semiannually thereafter; whenever the seal on the Flow Alarm is broken; or any alteration is made affecting the holding time.

Criteria.--Forward flow occurs only when flow rates are below the Flow Alarm set point and above the Loss-of-Signal Alarm set point.

Apparatus.--None.

Method.--By observing the actions of the frequency pens on the recorder and the position of the flow diversion devise.

Procedure.--

a. Operate the pasteurizer in forward flow, at a flow rate below the Flow Alarm set point and above the Loss-of-Signal or Low-Flow alarm set point, using water.

b. Disrupt power to the magnetic flow meter or decrease the flow through the flow meter below the loss of signal or low flow alarm set point. Observe that the flow diversion devise and both the safety thermal limit recorder frequency pen and the flow rate frequency pen assume the diverted flow position.

c. Record results for the office record.

Corrective Action.--If the valve does not divert or the pens do not move. Adjustment of low flow alarm or modification or repair of control wiring is required.

D. CONTINUOUS FLOW HOLDERS--FLOW CUT-IN AND CUT-OUT

Application.--To all HTST pasteurizers using a Magnetic Flow Meter System in lieu of a metering pump.

Frequency.--Upon installation, semiannually thereafter, whenever the seal on the Flow Alarm is broken, any alteration is made affecting the holding time, the velocity of the flow or the capacity of holding tube, or whenever a check of the capacity indicates a speedup.

Criteria.--Forward flow occurs only when flow rates are below the Flow Alarm set point and above the Loss-of-Signal Alarm set point.

Apparatus.--None.

Method.--By observing the recorder readings along with the action of the frequency pen on the recorder.

Procedure.--

a. Operate the pasteurizer in forward flow, at a flow rate below the Flow Alarm set point and above the Loss-of-Signal Alarm set point, using water above pasteurization temperature.

b. Using the Flow Controller, increase flow rate slowly until the frequency pen on the recorder indicates a flow diversion (flow cut-out point). The flow diversion device will also assume the diverted position. Observe the reading of flow rate from the recorder, the instant flow cut-out occurs, as indicated by the frequency pen.

c. With the pasteurizer operating on water, above the pasteurization temperature, and with the flow diversion device diverted because of excessive flow rate, slowly decrease flow rate until the frequency pen on the Flow Recorder indicates the start of a forward flow movement (flow cut-in point). Because of the time delay relay described in Test E, the flow diversion device will not move immediately to the forward flow position. Observe the reading from the recorder, the instant flow cut-in occurs, as indicated by the frequency pen.

d. Record results for the office record.

Corrective Action.--If the cut-in or cut-out point occurs at a flow rate equal to or greater than the value at which holding time was measured, adjust the Flow Alarm to a lower set point and repeat the test.

E. CONTINUOUS FLOW HOLDERS--TIME DELAY RELAY (1)

Application.--To all HTST pasteurizers using a Magnetic Flow Meter System to replace a metering pump.

Frequency.--Upon installation, semiannually thereafter, whenever the seal on the Flow Alarm is broken, any alteration is made affecting the holding time, the velocity of the flow or the capacity of the holding tube, or whenever a check of the capacity indicates a speedup.

Criteria.--Following the flow cut-in, as described in the test for flow cut-in and cut-out, forward flow shall not occur until all product in the holding tube has been held at or above pasteurization temperature for at least the minimum holding time.

Apparatus.--Stopwatch.

Method.--Set time delay equal to or greater than the minimum holding time.

Procedure.--

a. Operate the pasteurizer in forward flow, at a flow rate below the Flow Alarm set point and above the Loss-of-Signal Alarm set point, using water above pasteurization temperature.

b. Using the Flow Controller, increase flow rate slowly until the frequency pen on the Flow Recorder indicates a diversion movement and the flow diversion device moves to the diverted position. There shall be no time delay between the movements of the frequency pen and the flow diversion device.

c. With the pasteurizer operating on water, above the pasteurization temperature, with the flow diversion device diverted because of excessive flow rate, slowly decrease flow rate.

d. Start the stopwatch the instant the frequency pen on the Flow Recorder indicates the start of a forward flow movement.

e. Stop the stopwatch the instant the flow diversion device starts to move to the forward flow position.

f. Record results for the office record.

g. Install and seal enclosure over the time delay relay.

Corrective Action.--If the time delay is less than the minimum holding time, increase the time setting on the time delay and repeat this test procedure.

F. CONTINUOUS FLOW HOLDERS--TIME DELAY RELAY (2)

Application.--To all HTST pasteurizers using a Magnetic Flow Meter System to replace a metering pump.

Frequency.--Upon installation, semiannually thereafter or whenever the seal on the time delay relay is broken.

Criteria.--When the mode switch on the flow diversion device is moved from process product to CIP, the flow diversion device shall move immediately to the diverted position and remain in the diverted position, for at least 10 minutes, before starting its normal cycling in the CIP mode. Simultaneously, the booster pump shall be turned off and shall not run during the 10-minute time delay.

Apparatus.--Stopwatch.

Method.--Adjust the set point on the time delay relay equal to or greater than 10 minutes.

Procedure.--

a. Operate pasteurizer in forward flow with the mode switch on the flow diversion device in the process product position, at a flow rate below the Flow Alarm set point and above the Loss-of-Signal Alarm set point, using water above pasteurization temperature.

b. Move the mode switch on the flow diversion device to the CIP position. The flow diversion device should move immediately to the diverted position and the booster pump should stop running. Start the stopwatch when the flow diversion device moves to the diverted position.

c. Stop the stopwatch when the flow diversion device moves to the forward position, for its initial cycle in the CIP mode. The booster pump may start at this time.

d. Record results for the office record.

e. Install and seal enclosure over the time delay relay.

Corrective Action.--If the flow diversion device does not remain in the diverted position for at least 10 minutes after the mode switch is moved from process product to CIP, increase the set point on the time delay relay and repeat this test procedure. If the booster pump runs at any time during the 10-minute delay, the booster pump wiring is in need of repair.

3. CALCULATED HOLD FOR INDIRECT HEATING

Application.--To all HHST pasteurizers using indirect heating.

Frequency.--When installed; semiannually thereafter; whenever the seal on speed setting is broken; whenever any alteration is made affecting the holding time, the velocity of the flow, e.g., replacement of pump, motor, belt, driver or driven pulley,

decrease in number of heat-exchange plates or the capacity of holding tube; and whenever a check of the capacity indicates a speedup.

Criteria.--Every particle of product shall be held for the minimum holding time in both the forward and diverted-flow positions.

Apparatus.--No supplemental materials needed.

Method.--Fully developed laminar flow is assumed and holding tube length is calculated. An experimental determination of pumping rate is required; this is accomplished by determining the time required for the pasteurizer to fill a vessel of known volume, converting these data by division to obtain flow rate in gallons per second and multiplying this value by the proper number in Table 4 of this paragraph, to obtain the required length of the holding tube. Holding tube lengths for HHST pasteurizers with indirect heating for a pumping rate of 1 gallon/second are:

TABLE 4.
Holding Tube Length, HHST Pasteurizers
Indirect Heating

Holding time (seconds)	Tubing Size (inches) 1	1-1/2	2	2-1/2	3
	Holding tube length (inches)				
1.0	723.0	300.0	168.0	105.0	71.4
0.5	362.0	150.0	84.0	52.4	35.7
0.1	72.3	30.0	16.8	10.5	7.14
0.05	36.2	15.0	8.4	5.24	3.57

Procedures.--

a. Examine the entire system to ensure that all flow promoting equipment is operating at maximum capacity and all flow impeding equipment is so adjusted or bypassed to provide the minimum of resistance to the flow. This means that in-line filters must be removed, booster pumps must be in operation and vacuum equipment in the system must be operating at a maximum vacuum. Also, before the tests are begun, the pasteurizer should be operated at maximum flow for a sufficient time to purge air from the system (about 15 minutes) and pipe connections on the suction side of the metering pump should be made tight enough to exclude the entrance of air. With the pasteurizer operating with water, adjust the metering pump to its maximum capacity, preferably with a new belt and full-size impellers.

b. Determine that no flow exists in the diverted line, and measure the time required to deliver a known volume of water at the forward-flow discharge line. Repeat the test at least once to determine that the measurements are consistent.

c. Repeat the steps in paragraphs a. and b. of this procedure in diverted flow by collecting the effluent at the discharge of the divert line.

d. Select the greatest flow rate (shortest delivery time for the known volume) and calculate the flow rate in gallons per second by dividing the known volume by the time required to collect the known volume. Multiply this value with the appropriate value in Table 4 to determine the required holding tube length.

e. Determine the number and type of fittings in the holding tube and convert these to equivalent lengths of straight pipe with the use of Table 5, of this paragraph. Determine the total length of the holding tube by adding the equivalent lengths of the fittings to the measured straight lengths of pipe. Record the number and type of fittings, the number and length of straight pipe and the holding tube configuration for the office record. If the temperature sensor is located at the beginning of the holding tube, the holding

tube shall be protected against heat loss by material that is impervious to water.

TABLE 5.
Centerline Distances of 3-A Fittings

3-A designation	Fitting size (inches)				
	1	1-1/2	2	2-1/2	3
	Centerline distance (inches)				
2C 90° bend	3.4	4.8	6.2	8.0	9.7
2CG 90° bend	3.1	4.5	5.8	7.6	9.3
2F 90° bend	3.4	4.8	6.2	8.0	9.7
2FG 90° bend	3.1	4.5	5.8	7.6	9.3
2E 90° bend	3.4	4.8	6.2	8.0	9.7
2EG 90° bend	3.2	4.6	6.0	7.7	9.4

Alternate procedure.--For pasteurizers of large capacity, the method of measuring flow rate at the discharge of the pasteurizer is inconvenient, the following alternate test procedure may be used. Remove the divert line from the raw-product supply tank and turn off the product pump feeding the raw-product supply tank. Suspend a sanitary dip stick in the raw-product supply tank and operate the pasteurizer at maximum capacity. Record the time required for the water level to move between two graduations on the dip stick. The volume of water is calculated from the dimensions of the raw-product supply tank and the drop in water level. Flow rate is determined as follows: divide the volume of water removed from the raw-product supply tank by the time required to remove it.

Corrective Action.--If the length of the holding tube is shorter than the calculated length, reseal the metering pump at a slower maximum speed, or lengthen the holding tube, or both, and repeat the above determination.

4. CALCULATED HOLD FOR DIRECT HEATING

Application.--To all HHST pasteurizers using direct contact heating.

Frequency.--When installed; semiannually thereafter; whenever the seal on the speed setting is broken; whenever any alteration is made affecting the holding time, the velocity of the flow, e.g., replacement of pump, motor, belt, driver or driven pulley, or decrease in the number of heat exchange plates; or the capacity of the holding tube and whenever a check of the capacity indicates a speedup.

Apparatus.--No supplemental materials needed.

Criteria.--Every particle of product shall be held for the minimum holding time in both forward- and diverted-flow positions.

Method.--Fully developed laminar flow and a temperature increase by steam injection of 67°C (120°F) are assumed, the temperature-time standard is chosen by the processor and the required holding tube length is calculated from an experimental determination of pumping rate.

Procedures.--

a. Examine the entire system to ensure that all flow promoting equipment is operating at a maximum capacity and all flow impeding equipment is so adjusted or bypassed as to provide the minimum resistance to the flow. Remove in-line filters, make certain booster pumps are operating and that vacuum equipment in the system is operating at maximum vacuum. Also, before the tests are begun, operate the pasteurizer at maximum flow for a sufficient time to purge

the air from the system (about 15 minutes) and tighten pipe connections on the suction side of the metering pump to exclude entrance of air. With the pasteurizer operating on water, adjust the metering pump to its maximum capacity. Determine that no flow exists in the diverted line, and measure the time required to deliver a known volume of water at the discharge of the pasteurizer in forward flow. Repeat the test at least twice to determine that the measurements are consistent.

b. Repeat the last step (a. above) in diverted flow by collecting the effluent at the discharge of the divert line. Select the greatest flow rate, the shortest delivery time for the known volume and calculate the flow rate in gallons per second, by dividing the known volume by the time required to collect the known volume. Multiply this value, gallons per second, with the appropriate value in Table 6, of this paragraph, to determine the required holding tube length. Holding tube lengths for direct contact heating pasteurizers with a pumping rate of 1 gallon/second are:

TABLE 6.
Holding Tube Length, HHST Pasteurizers, Direct Heating

	Tubing Size (inches)				
Holding time (seconds)	1	1-1/2	2	2-1/2	3
	Holding tube length (inches)				
1	810.0	336.0	188.0	118.0	80.0
0.5	405.0	168.0	94.0	59.0	40.0
0.1	81.0	33.6	18.8	11.8	8.0
0.05	40.5	16.8	9.40	5.90	4.0
0.01	8.10	3.36	1.88	1.18	0.8

c. Determine the number and type of fittings in the holding tube, and convert these to equivalent lengths of straight pipe with the use of Table 5, p. 135. Determine the total length of the holding tube by adding the equivalent lengths of the fittings to the measured lengths of straight pipe. If the actual holding tube length is equivalent to or greater than the required holding tube length, record the number and type of fittings, the number and length of straight pipes and the holding tube configuration, for the office record. Make sure that the holding tube slopes upward at least 6.35 millimeters (0.25 inch) per foot. The holding tube shall also be protected against heat loss with insulation that is impervious to water if the temperature sensor is located at the beginning of the holding tube.

Alternate procedure.--For pasteurizers of large capacity, the method of measuring flow rate at the discharge of the pasteurizer is inconvenient and the following alternate test procedure may be used. Remove the divert line from the raw product supply tank and turn off the product pump feeding the raw-product supply tank. Suspend a sanitary dip stick in the raw-product supply tank and operate the pasteurizer at maximum capacity. Record the time required for the water level to move between two graduations on the dip stick. Calculate the volume of water from the dimensions of the raw-product supply tank and the drop in water level. Determine flow rate as follows: divide the volume of water, in gallons, removed from the raw-product supply tank by the time, in seconds, required to remove it. Then use Table 6 to calculate the required holding tube length.

Corrective Action.--If the length of the holding tube is shorter than the calculated length, reseal the metering pump at a slower maximum speed, or lengthen the holding tube, or both, and repeat the procedure.

TEST 12.
THERMAL LIMIT CONTROLLER FOR CONTROL-SEQUENCE LOGIC

References.--Items 16p(A), 16p(C).

Thermal limit controllers used with HHST systems that have the flow-diversion device located downstream from the regenerator and/or cooler shall be tested by one of the following applicable tests at the frequency specified.

1. HHST PASTEURIZATION--INDIRECT HEATING

Application.--To all HHST pasteurizers using indirect heating.

Frequency.--Upon installation, and every 3 months thereafter.

Criteria.--The pasteurizer shall not operate in forward flow until the product surfaces downstream from the holding tube have been sanitized. On start up, surfaces shall be exposed to fluid at pasteurization temperature for at least the required pasteurization time. If the product temperature falls below the pasteurization standard in the holding tube, forward flow shall not be re-achieved until the product surfaces downstream from the holding tube have been re-sanitized.

Apparatus.--A constant temperature bath of water, or oil, and the test lamp from the pneumatic testing device described in Test 9.,1., p. 121, can be used to check the control-sequence logic of the thermal limit controller.

Method.--The control-sequence logic of the thermal limit controller is determined by monitoring the electric signal from the thermal limit controller during a series of immersions and removals of the two sensing elements from a bath heated above the cut-in temperature.

Procedures.--

a. Heat a constant temperature water or oil bath a few degrees above the cut-in temperature on the thermal limit controller. Wire the test lamp in series with the signal from the thermal limit controller to the flow-diversion device. If some processors have time delays built into their control logic, in excess of that required for public health reasons, bypass these timers or account for their effect in delaying forward flow.

b. Immerse the sensing element of the flow-diversion device in the bath, which is above the cut-in temperature. The test lamp should remain unlighted, i.e., diverted flow. Leave the sensing element in the bath.

c. Immerse the sensing element from the holding tube in the bath. The test lamp should light up, i.e., forward flow after a minimum time delay of 1 second.

d. Remove the sensing element of the flow-diversion device from the bath. The test lamp should remain lighted, i.e., forward flow.

e. Remove the holding tube sensing element from the bath. The test lamp should go out immediately, i.e., diverted flow.

f. Re-immerse the sensing element of the holding tube in the bath. The test lamp should remain unlighted, i.e., diverted flow.

Corrective Action.--If the control-sequence logic of the thermal limit controller does not follow this pattern, the instrument shall be rewired to conform to this logic.

2.HHST PASTEURIZATION--DIRECT HEATING

Application.--To all HHST pasteurizers using direct contact heating.

Frequency.-- Upon installation and every 3 months thereafter.

Criteria.--The pasteurizer shall not operate in forward flow until the product surfaces downstream from the holding tube have been sanitized. On start up, surfaces shall be exposed to fluid at pasteurization temperature for at least the required pasteurization time. If the product temperature falls below the pasteurization standard in the holding tube, forward flow shall not be re-achieved until the product surfaces downstream from the holding tube have been re-sanitized.

Apparatus.--A constant temperature bath of water, or oil, and the test lamp from the pneumatic testing device described in Test 9.,1., p. 121, can be used to check the control-sequence logic of the thermal limit controller.

Method.--The control-sequence logic of the thermal limit controller is determined by monitoring the electric signal from the thermal limit controller during a series of immersions and removals of the three sensing elements from a bath heated above the cut-in temperature.

Procedures.--

a. Heat a water or oil bath to a constant temperature, a few degrees above the cut-in temperature on the thermal limit controller. Wire the test lamp in series with the signal from the thermal limit controller to the flow-diversion device. If some processors have time delays built into their control logic, in excess of that required for public health reasons, bypass these timers or account for their effect in delaying forward flow. Before performing this test, make sure the pressure switches, which must be closed to achieve forward flow, have also been bypassed.

b. Immerse the sensing element from the flow-diversion device in the bath which is above the cut-in temperature. The test lamp should remain unlighted, i.e., diverted flow. Remove this sensing element from the bath.

c. Immerse the sensing element, from the vacuum chamber, in the bath. The test lamp should remain unlighted, i.e., diverted flow. Remove the sensing element from the bath.

d. Immerse two sensing elements, from the vacuum chamber and flow-diversion device, in the bath. The test lamp should remain unlighted, i.e., diverted flow. Leave the two sensing elements in the bath.

e. Immerse the third sensing element, from the holding tube, in the bath. The test lamp should light up, i.e., forward flow, after a minimum time delay of 1 second.

f. Remove the sensing element of the flow-diversion device, from the bath. The test lamp should remain lighted, i.e., forward flow.

g. Remove the sensing element of the vacuum chamber, from the bath. The test lamp should remain lighted, i.e., forward flow.

h. Remove the last sensing element of the holding tube, from the bath. The test lamp should go out, i.e., diverted flow, immediately.

i. Re-immerse the sensing element of the holding tube in the bath. The test lamp should remain unlighted, i.e., diverted flow.

Corrective Action.--If the control-sequence logic of the thermal limit controller does not follow the pattern set out

in the procedures section, the instrument shall be rewired to conform to this logic.

TEST 13.
SETTING OF CONTROL SWITCHES FOR PRODUCT PRESSURE IN THE HOLDING TUBE

Reference.-- Item 16p(A).

Application.--To all HHST pasteurizers using direct contact heating.

Frequency.--Upon installation; every 3 months thereafter; whenever the pressure switch seal is broken; and whenever the operating temperature is changed.

Criteria.--The pasteurizer shall not operate in forward flow unless the product pressure in the holding tube is at least 70 kPa (10 psi) above the boiling pressure of the product.

Apparatus.--A sanitary pressure gauge and a pneumatic testing device described in Test 9.,1., p. 121, can be used for checking and adjusting the pressure switch setting.

Method.--The pressure switch is checked and adjusted so as to prevent forward flow; unless the product pressure in the holding tube is at least 70 kPa (10 psi) above the boiling pressure of the product.

Procedure.--From Figure 6 determine the pressure switch setting necessary for the operating temperature (not the diversion temperature) being used in the process. Install the sanitary pressure gauge, of known accuracy, and the pressure switch sensing element on the pneumatic testing device. Remove the seal and cover to expose the adjustment mechanism on the pressure switch. Place the test lamp in series with the pressure switch contacts or use some other method to monitor the cut-in signal. Apply air pressure to the sensing element and determine the pressure gauge reading at the cut-in point of the switch which will light the test lamp. If the switch is short circuited, the lamp will be lighted before air pressure is applied. Determine that the cut-in pressure on the switch is equivalent to or greater than the required pressure from Figure 6. Where adjustment is necessary, refer to the manufacturer's instruction. After adjustment, repeat the procedure set out in this paragraph. When the results are satisfactory, seal the pressure switch setting and record the results for the office record. For each operating temperature on HHST pasteurizers using direct contact heating, the product pressure switch setting is as follows:

Figure 6. Pressure Switch Settings

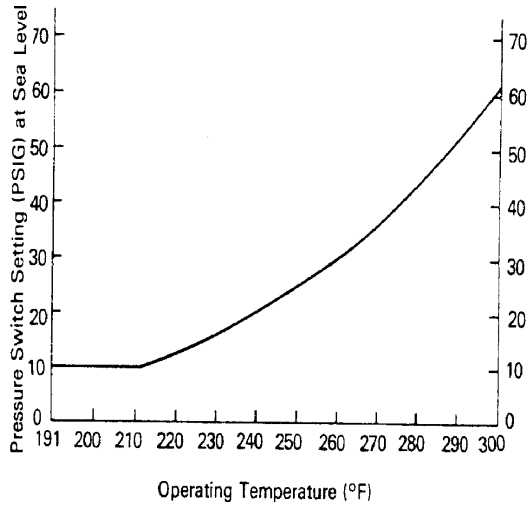

*If an HHST Pasteurizer using direct contact hearing is installed at a locality above sea level, this pressure switch setting shall be adjusted upward by the difference between normal atmospheric pressure at the locality and at sea level.

TEST 14.
SETTING OF CONTROL SWITCHES FOR DIFFERENTIAL PRESSURE ACROSS THE INJECTOR

Application.--To all HHST pasteurizers using direct contact heating.

Frequency.--Upon installation; every 3 months thereafter; and whenever the differential pressure controller seal is broken.

Criteria.--The pasteurizer shall not operate in forward flow unless the product pressure drop across the injector is at least 70 kPa (10 psi).

Apparatus.--A sanitary pressure gauge and a pneumatic testing device described in Test 9.,1, p. 121, can be used for checking and adjusting the differential pressure controller.

Method.--Check the differential pressure switch and adjust it so as to prevent forward flow, unless the differential pressure across the injector is at least 70 kPa (10 psi).

Procedure.--Remove both pressure sensing elements from their original locations on the pasteurizer, install the sanitary pressure gauge, of known accuracy, and the pressure sensing element, that is installed prior to the steam injection on the pneumatic testing device. Leave the other pressure sensing element open to the atmosphere, but at the same height as the sensing element connected to the pneumatic testing device. Wire the test lamp in series with the micro-switch of the differential pressure controller or use the method provided by the instrument manufacturer to monitor the cut-in signal. Apply air pressure to the sensing element and determine the pressure gauge reading at the cut-in point of the differential pressure switch that will light the test lamp. Determine that the differential pressure cut-in on the controller is at least 70 kPa (10 psi). Where adjustment is necessary, refer to the manufacturer's instructions. After adjustment, repeat the procedure set forth in this paragraph. When the results are satisfactory, seal the instrument and record the results for the office record.

APPENDIX G.

STANDARDS OF IDENTITY FOR MILK, MILK PRODUCTS AND NONFAT DRY MILK AND FEDERAL FOOD, DRUG, AND COSMETIC ACT DEFINITIONS

The following standards of identity have been reproduced from the *Code of Federal Regulations*, Title 21, for reference purposes:

SECTION 131.110 Milk.

(a) *Description*. Milk is the lacteal secretion, practically free from colostrum, obtained by the complete milking of one or more healthy cows. Milk that is in final package form for beverage use shall have been pasteurized or ultrapasteurized, and shall contain not less than 8 1/4 percent milk solids not fat and not less than 3 1/4 percent milkfat. Milk may have been adjusted by separating part of the milkfat therefrom, or by adding thereto cream, concentrated milk, dry whole milk, skim milk, concentrated skim milk, or nonfat dry milk. Milk may be homogenized.

(b) *Vitamin addition* (Optional).

(1) If added, vitamin A shall be present in such quantity that each quart of the food contains not less than 2000 International Units thereof within limits of good manufacturing practice.

(2) If added, vitamin D shall be present in such quantity that each quart of the food contains 400 International Units thereof within limits of good manufacturing practice.

(c) *Optional ingredients*. The following safe and suitable ingredients may be used:

(1) Carriers for vitamins A and D.

(2) Characterizing flavoring ingredients (with or without coloring, nutritive sweetener, emulsifiers, and stabilizers) as follows:

(i) Fruit and fruit juice (including concentrated fruit and fruit juice).

(ii) Natural and artificial food flavorings.

(d) *Methods of analysis*. Referenced methods are from ``Official Methods of Analysis of the Association of Official Analytical Chemists," 13th Ed. (1980), which is incorporated by reference. Copies may be obtained from the Association of Official Analytical Chemists, 2200 Wilson Blvd., Suite 400, Arlington, VA 22201- 3301, or may be examined at the Office of the Federal Register, 800 North Capitol Street, NW., suite 700, Washington, DC 20001.

(1) Milkfat content-``Fat, Roese-Gottlieb Method-Official Final Action," section 16.059.

(2) Milk solids not fat content-Calculated by subtracting the milk fat content from the total solids content as determined by the method ``Total Solids, Method I-Official Final Action," section 16.032.

(3) Vitamin D content-``Vitamin D-Official Final Action," sections 43.195-43.208. (e) Nomenclature. The name of the food is ``milk". The name of the food shall be accompanied on the label by a declaration indicating the presence of any characterizing flavoring, as specified in Section 101.22 of this chapter.

(1) The following terms shall accompany the name of the food wherever it appears on the principal display panel or panels of the label in letters not less than one-half the height of the letters used in such name:

(i) If vitamins are added, the phrase ``vitamin A" or ``vitamin A added", or

``vitamin D'' or ``vitamin D added'', or ``vitamin A and D'' or ``vitamins A and D added'', as is appropriate. The word ``vitamin'' may be abbreviated ``vit.''.

(ii) The word ``ultra-pasteurized'' if the food has been ultra- pasteurized.

(2) The following terms may appear on the label:

(i) The word ``pasteurized'' if the food has been pasteurized.

(ii) The word ``homogenized'' if the food has been homogenized.

(f) *Label declaration*. Each of the ingredients used in the food shall be declared on the label as required by the applicable sections of parts 101 and 130 of this chapter.

[42 FR 14360, Mar. 15, 1977, as amended at 47 FR 11822, Mar. 19, 1982; 49 FR 10090, Mar. 19, 1984; 54 FR 24892, June 12, 1989; 58 FR 2890, Jan. 6, 1993]

Section 131.115 Concentrated milk.

(a) *Description*. Concentrated milk is the liquid food obtained by partial removal of water from milk. The milkfat and total milk solids contents of the food are not less than 7.5 and 25.5 percent, respectively. It is pasteurized, but is not processed by heat so as to prevent spoilage. It may be homogenized.

(b) *Vitamin addition* (Optional). If added, vitamin D shall be present in such quantity that each fluid ounce of the food contains 25 International Units thereof, within limits of good manufacturing practice.

(c) *Optional ingredients*. The following safe and suitable optional ingredients may be used:

(1) Carrier for vitamin D.

(2) Characterizing flavoring ingredients, with or without coloring, as follows:

(i) Fruit and fruit juice, including concentrated fruit and fruit juice.

(ii) Natural and artificial food flavoring.

(d) *Methods of analysis*. Referenced methods are from ``Official Methods of Analysis of the Association of Official Analytical Chemists,'' 13th Ed. (1980), which is incorporated by reference. Copies may be obtained from the Association of Official Analytical Chemists, 2200 Wilson Blvd., Suite 400, Arlington, VA 22201- 3301, or may be examined at the Office of the Federal Register, 800 North Capitol Street, NW., suite 700, Washington, DC 20001.

(1) Milkfat content-``Fat-Official Final Action,'' section 16.172.

(2) Total milk solids-``Total Solids-Official Final Action,'' section 16.169.

(3) Vitamin D content-``Vitamin D in Milk-Official Final Action,'' sections 43.195-43.208.

(e) *Nomenclature*. The name of the food is ``Concentrated milk'' or alternatively ``Condensed milk''. If the food contains added vitamin D, the phrase ``vitamin D'' or ``vitamin D added'' shall accompany the name of the food wherever it appears on the principal display panel or panels of the label in letters not less than one-half the height of the letters used in such name. The word ``homogenized'' may appear on the label if the food has been homogenized. The name of the food shall include a declaration of the presence of any characterizing flavoring, as specified in Section 101.22 of this chapter.

(f) *Label declaration*. Each of the ingredients used in the food shall be declared on the label as required by the applicable sections of parts 101 and 130 of this chapter.

[42 FR 14360, Mar. 15, 1977, as amended at 47 FR 11822, Mar. 19, 1982; 48 FR 13024, Mar. 29, 1983; 49 FR 10090, Mar. 19, 1984; 54 FR 24892, June 12, 1989; 58 FR 2890, Jan. 6, 1993]

Section 131.123 Lowfat dry milk.

(a) *Description*. Lowfat dry milk is the product obtained by removal of water only from pasteurized lowfat milk, as defined in Section 131.135(a), which may have been homogenized. Alternatively, lowfat dry milk may be obtained by blending fluid, condensed, or dried nonfat milk with liquid or dried cream or with fluid, condensed, or dried milk, as appropriate, Provided, The resulting lowfat dry milk is equivalent in composition to that obtained by the method described in the first sentence of this paragraph. It contains not less than 5 percent but less than 20 percent by weight of milkfat on an as is basis. It contains not more than 5 percent by weight of moisture on a milk solids not fat basis. Lowfat dry milk contains added vitamin A as prescribed by paragraph (b) of this section.

(b) *Vitamin addition*.

(1) Vitamin A shall be present in such quantity that, when prepared according to label directions, each quart of the reconstituted product contains not less than 2,000 International Units thereof.

(2) Addition of vitamin D is optional. If added, vitamin D shall be present in such quantity that, when prepared according to label directions, each quart of the reconstituted product contains 400 International Units thereof.

(3) The requirements of this paragraph will be met if reasonable overages, within limits of good manufacturing practice, are present to ensure that the required levels of vitamins are maintained throughout the expected shelf life of the food under customary conditions of distribution.

(c) *Optional ingredients*. The following safe and suitable optional ingredients may be used:

(1) Carriers for vitamins A and D.

(2) Emulsifiers.

(3) Stabilizers.

(4) Anticaking agents.

(5) Antioxidants.

(6) Characterizing flavoring ingredients, with or without coloring and nutritive carbohydrate sweeteners, as follows:

(i) Fruit and fruit juice, including concentrated fruit and fruit juice.

(ii) Natural and artificial food flavoring.

(d) *Methods of analysis*. The following referenced methods of analysis are from ``Official Methods of Analysis of the Association of Official Analytical Chemists," 13th Ed. (1980), which is incorporated by reference. Copies may be obtained from the Association of Official Analytical Chemists, 2200 Wilson Blvd., Suite 400, Arlington, VA 22201-3301, or may be examined at the Office of the Federal Register, 800 North Capitol Street, NW., suite 700, Washington, DC 20001.

(1) Milkfat content-``Fat in Dried Milk-Official Final Action," sections 16.199-16.200.

(2) Moisture content-``Moisture-Official Final Action," section 16.192.

(3) Vitamin D content-``Vitamin D-Official Final Action," sections 43.195-43.208.

(e) *Nomenclature*. The name of the food is ``Lowfat dry milk." The name of the food shall appear on the principal display panel of the label in type of uniform size, style, and color. The name of the food shall be accompanied by a declaration indicating the presence of any characterizing flavoring, as specified in Section 101.22 of this chapter. The following phrases in type size not less than one-half the height of the type size used in such name shall accompany the name of the food wherever it appears on the principal display panel or panels:

(1) The phrase ``Contains - % milkfat", the blank to be filled in with the whole number closest to the actual fat content of the food.

(2) The phrase ``vitamin A" or ``vitamin A added", and if vitamin D is added, the phrase

``vitamins A and D" or ``vitamins A and D added", as appropriate. The word ``vitamin" may be abbreviated ``vit."

(f) *Label declaration*. Each of the ingredients used in the food shall be declared on the label as required by the applicable sections of parts 101 and 130 of this chapter.

[43 FR 19835, May 9, 1978, as amended at 47 FR 11823, Mar. 19, 1982; 48 FR 13024, Mar. 29, 1983; 49 FR 10091, Mar. 19, 1984; 54 FR 24892, June 12, 1989; 58 FR 2890, Jan. 6, 1993]

SECTION 131.135 Lowfat Milk.

(a) *Description*. Lowfat milk is milk from which sufficient milkfat has been removed to produce a food having, within limits of good manufacturing practice, one of the following milkfat contents: 1/2, 1, 1 1/2, or 2 percent. Lowfat milk is pasteurized or ultra-pasteurized, contains added vitamin A as prescribed by paragraph (b) of this section, and contains not less than 8 1/4 percent milk solids not fat. Lowfat milk may be homogenized.

(b) *Vitamin addition*. (1) Vitamin A shall be present in such quantity that each quart of the food contains not less than 2000 International Units thereof within limits of good manufacturing practice.

(2) Addition of vitamin D is optional. If added, vitamin D shall be present in such quantity that each quart of the food contains 400 International Units thereof within limits of good manufacturing practice.

(c) *Optional ingredients*. The following safe and suitable ingredients may be used:

(1) Carriers for vitamins A and D.

(2) Concentrated skim milk, nonfat dry milk, or other milk derived ingredients to increase the nonfat solids content of the food: Provided, That the ratio of protein to total nonfat solids of the food, and the protein efficiency ratio of all protein present, shall not be decreased as a result of adding such ingredients.

(3) When one or more of the optional milk derived ingredients in paragraph (c)(2) of this section are used, emulsifiers, stabilizers, or both, in an amount not more than 2 percent by weight of the solids in such ingredients.

(4) Characterizing flavoring ingredients (with or without coloring, nutritive sweetener, emulsifiers, and stabilizers) as follows:

(i) Fruit and fruit juice (including concentrated fruit and fruit juice).

(ii) Natural and artificial food flavorings.

(d) *Methods of analysis*. Referenced methods are from ``Official Methods of Analysis of the Association of Official Analytical Chemists," 13th Ed. (1980), which is incorporated by reference. Copies may be obtained from the Association of Official Analytical Chemists, 2200 Wilson Blvd., Suite 400, Arlington, VA 22201- 3301, or may be examined at the Office of the Federal Register, 800 North Capitol Street, NW., suite 700, Washington, DC 20001.

(1) Milkfat content-``Fat, Roese-Gottlieb Method-Official Final Action," section 16.059.

(2) Milk solids not fat content (or total nonfat solids content)- Calculated by subtracting the milkfat content from the total solids content as determined by the method ``Total Solids, Method I-Official Final Action," section 16.032.

(3) Vitamin D content-``Vitamin D-Official Final Action," sections 43.195-43.208.

(e) *Nomenclature*. The name of the food is ``Lowfat milk". The name of the food shall appear on the label in type of uniform size, style, and color. The name of the food shall be accompanied on the label by a declaration indicating the presence of any characterizing flavoring, as specified in Section 101.22 of this chapter.

(1) The following terms shall accompany the name of the food wherever it appears on the principal display panel or panels of the label in letters not less than one-half of the height of the letters used in such name:

(i) The phrase ``--% milkfat", the blank to be filled in with the fraction 1/2, or multiple thereof, to indicate the actual fat content of the food.

(ii) The phrase ``vitamin A" or ``vitamin A added", or, if vitamin D is added, the phrase ``vitamins A and D added". The word ``vitamin" may be abbreviated ``vit.".

(iii) The word ``ultra-pasteurized" if the food has been ultra-pasteurized.

(iv) The phrase ``protein fortified" or ``fortified with protein" if the food contains not less than 10 percent milk derived nonfat solids.

(2) The following terms may appear on the label:

(i) The word ``pasteurized" if the food has been pasteurized.

(ii) The word ``homogenized" if the food has been homogenized.

(f) *Label declaration*. Each of the ingredients used in the food shall be declared on the label as required by the applicable sections of parts 101 and 130 of this chapter.

[42 FR 14360, Mar. 15, 1977, as amended at 45 FR 81737, Dec. 12, 1980; 47 FR 11823, Mar. 19, 1982; 49 FR 10091, Mar. 19, 1984; 54 FR 24893, June 12, 1989; 58 FR 2890, Jan. 6, 1993]

Effective Date Note: 1. Paragraph (e)(1)(iv) of Section 131.135 was revised at 45 FR 81737, Dec. 12, 1980, effective date for compliance July 1, 1983. The effective date for compliance was stayed until further notice at 47 FR 11271, Mar. 16, 1982. Paragraph (e)(1)(iv) published at 42 FR 14360, Mar. 15, 1977, and set forth below is currently effective.

Section 131.147 Dry whole milk.

(a) *Description*. Dry whole milk is the product obtained by removal of water only from pasteurized milk, as defined in Section 131.110(a), which may have been homogenized. Alternatively, dry whole milk may be obtained by blending fluid, condensed, or dried nonfat milk with liquid or dried cream or with fluid, condensed, or dried milk, as appropriate, provided the resulting dry whole milk is equivalent in composition to that obtained by the method described in the first sentence of this paragraph. It contains the lactose, milk proteins, milkfat, and milk minerals in the same relative proportions as the milk from which it was made. It contains not less than 26 percent but less than 40 percent by weight of milkfat on an as is basis. It contains not more than 5 percent by weight of moisture on a milk solids not fat basis.

(b) *Vitamin addition*.

(1) Addition of vitamin A is optional. If added, vitamin A shall be present in such quantity that, when prepared according to label directions, each quart of the reconstituted product shall contain not less than 2,000 International Units thereof.

(2) Addition of vitamin D is optional. If added, vitamin D shall be present in such quantity that, when prepared according to label directions, each quart of the reconstituted product shall contain 400 International Units thereof.

(3) The requirements of this paragraph will be met if reasonable overages, within limits of good manufacturing practice, are present to ensure that the required levels of vitamins are maintained throughout the expected shelf life of the food under customary conditions of distribution.

(c) *Optional ingredients*. The following safe and suitable optional ingredients may be used:

(1) Carriers for vitamins A and D.

(2) Emulsifiers.

(3) Stabilizers.
(4) Anticaking agents.
(5) Antioxidants.
(6) Characterizing flavoring ingredients (with or without coloring and nutritive carbohydrate sweetener) as follows:
(i) Fruit and fruit juice, including concentrated fruit and fruit juice.
(ii) Natural and artificial food flavoring.
(d) Methods of analysis. The following referenced methods of analysis are from ``Official Methods of Analysis of the Association of Official Analytical Chemists," 13th Ed. (1980), which is incorporated by reference. Copies may be obtained from the Association of Official Analytical Chemists, 2200 Wilson Blvd., Suite 400, Arlington, VA 22201-3301, or may be examined at the Office of the Federal Register, 800 North Capitol Street, NW., suite 700, Washington, DC 20001.
(1) Milkfat content-``Fat in Dried Milk-Official Final Action," sections 16.199-16.200.
(2) Moisture content-``Moisture-Official Final Action," section 16.192.
(3) Vitamin D content-``Vitamin D-Official Final Action," sections 43.195-43.208.
(e) *Nomenclature*. The name of the food is ``Dry whole milk." The name of the food shall appear on the principal display panel of the label in type of uniform size, style, and color. The name of the food shall be accompanied by a declaration indicating the presence of any characterizing flavoring as specified in Section 101.22 of this chapter. The following phrases in type size not less than one-half the height of the type size used in such name shall accompany the name of the food wherever it appears on the principal display panel or panels.
(1) The phrase ``Contains - % milkfat", the blank to be filled in with the whole number closest to the actual fat content of the food.
(2) If vitamins are `` added", the phrase ``vitamin A", or ``vitamin A added", or ``vitamin D", or ``vitamin D added", or ``vitamins A and D", or ``vitamins A and D added", as appropriate. The word ``vitamin" may be abbreviated ``vit."
(f) *Label declaration*. Each of the ingredients used in the food shall be declared on the label as required by the applicable sections of parts 101 and 130 of this chapter.

[43 FR 19836, May 9, 1978, as amended at 47 FR 11824, Mar. 19, 1982; 49 FR 10092, Mar. 19, 1984; 54 FR 24893, June 12, 1989; 58 FR 2891, Jan. 6, 1993]

SECTION 131.143 Skim milk.

(a) *Description*. Skim milk is milk from which sufficient milkfat has been removed to reduce its milkfat content to less than 0.5 percent. Skim milk that is in final package form for beverage use shall have been pasteurized or ultra-pasteurized, shall contain added vitamin A as prescribed by paragraph (b) of this section, and shall contain not less than 8 1/4 percent milk solids not fat. Skim milk may be homogenized.
(b) *Vitamin addition*.
(1) Vitamin A shall be present in such quantity that each quart of the food contains not less than 2000 International Units thereof within limits of good manufacturing practice.
(2) Addition of vitamin D is optional. If added, vitamin D shall be present in such quantity that each quart of the food contains 400 International Units thereof within limits of good manufacturing practice.
(c) *Optional ingredients*. The following safe and suitable ingredients may be used:
(1) Carriers for vitamins A and D.
(2) Concentrated skim milk, nonfat dry milk, or other milk derived ingredients to increase the nonfat solids content of the food: Provided, That the ratio of protein to total

nonfat solids of the food, and the protein efficiency ratio of all protein present, shall not be decreased as a result of adding such ingredients.

(3) When one or more of the optional milk derived ingredients in paragraph (c)(2) of this section are used, emulsifiers, stabilizers, or a combination of both, in an amount not more than 2 percent by weight of the solids in such ingredients.

(4) Characterizing flavoring ingredients (with or without coloring, nutritive sweetener, emulsifiers, and stabilizers) as follows:

(i) Fruit and fruit juice (including concentrated fruit and fruit juice).

(ii) Natural and artificial food flavoring.

(d) *Methods of analysis*. Referenced methods are from ``Official Methods of Analysis of the Association of Official Analytical Chemists," 13th Ed. (1980), which is incorporated by reference. Copies may be obtained from the Association of Official Analytical Chemists, 2200 Wilson Blvd., Suite 400, Arlington, VA 22201- 3301, or may be examined at the Office of the Federal Register, 800 North Capitol Street, NW., suite 700, Washington, DC 20001.

(1) Milkfat content-``Fat, Roese-Gottlieb Method-Official Final Action," section 16.059.

(2) Milk solids not fat content (or total nonfat solids content)- Calculated by subtracting the milkfat content from the total solids content as determined by the method ``Total Solids, Method I-Official Final Action," section 16.032.

(3) Vitamin D content-``Vitamin D-Official Final Action," sections 43.195-43.208.

(e) *Nomenclature*. The name of the food is ``Skim milk" or alternatively ``Nonfat milk". The name of the food shall appear on the label in type of uniform size, style, and color. The name of the food shall be accompanied on the label by a declaration indicating the presence of any characterizing flavoring, as specified in Section 101.22 of this chapter.

(1) The following terms shall accompany the name of the food wherever it appears on the principal display panel or panels of the label in letters not less than one-half of the height of the letters used in such name:

(i) The phrase ``vitamin A" or ``vitamin A added", or, if vitamin D is added, the phrase ``vitamins A and D" or ``vitamins A and D added". The word ``vitamin" may be abbreviated ``vit.".

(ii) The word ``ultra-pasteurized" if the food has been ultra- pasteurized.

(iii) The phrase ``protein fortified" or ``fortified with protein" if the food contains not less than 10 percent milk derived nonfat solids.

(2) The following terms may appear on the label:

(i) The word ``pasteurized" if the food has been pasteurized.

(ii) The word ``homogenized" if the food has been homogenized.

(f) *Label declaration*. Each of the ingredients used in the food shall be declared on the label as required by the applicable sections of parts 101 and 130 of this chapter.

[42 FR 14360, Mar. 15, 1977, as amended at 45 FR 81737, Dec. 12, 1980. Redesignated at 46 FR 9934, Jan. 30, 1981, and amended at 47 FR 11824, Mar. 19, 1982; 49 FR 10091, Mar. 19, 1984; 54 FR 24893, June 12, 1989; 58 FR 2891, Jan. 6, 1993]

Effective Date Note: 1. Paragraph (e)(1)(iii) of Section 131.143 was revised at 45 FR 81737, Dec. 12, 1980, effective date for compliance July 1, 1983. The effective date for compliance was stayed until further notice at 47 FR 11271, Mar. 16, 1982. Paragraph (e)(1)(iii) published at 42 FR 14360, Mar. 15,

1977, and set forth below is currently effective.

SECTION 131.125 Nonfat dry milk.

(a) *Description*. Nonfat dry milk is the product obtained by removal of water only from pasteurized skim milk. It contains not more than 5 percent by weight of moisture, and not more than 1 1/2 percent by weight of milkfat unless otherwise indicated.

(b) *Optional ingredients*. Safe and suitable characterizing flavoring ingredients (with or without coloring and nutritive carbohydrate sweetener) as follows:

(1) Fruit and fruit juice, including concentrated fruit and fruit juice.

(2) Natural and artificial food flavorings.

(c) *Methods of analysis*. The following referenced methods of analysis are from ``Official Methods of Analysis of the Association of Official Analytical Chemists," 13th Ed. (1980), which is incorporated by reference. Copies may be obtained from the Association of Official Analytical Chemists, 2200 Wilson Blvd., Suite 400, Arlington, VA 22201-3301, or may be examined at the Office of the Federal Register, 800 North Capitol Street, NW., suite 700 Washington, DC 20001.

(1) Milkfat content-``Fat in Dried Milk-Official Final Action," sections 16.199-16.200.

(2) Moisture content-``Moisture-Official Final Action," section 16.192.

(d) *Nomenclature*. The name of the food is ``Nonfat dry milk". If the fat content is over 1 1/2 percent by weight, the name of the food on the principal display panel or panels shall be accompanied by the statement ``Contains --% milkfat", the blank to be filled in with the percentage to the nearest one-tenth of 1 percent of fat contained, within limits of good manufacturing practice. The name of the food shall include a declaration of the presence of any characterizing flavoring, as specified in Section 101.22 of this chapter.

(e) *Label declaration*. Each of the ingredients used in the food shall be declared on the label as required by the applicable sections of parts 101 and 130 of this chapter.

[42 FR 14360, Mar. 15, 1977, as amended at 43 FR 19836, May 9, 1978; 47 FR 11823, Mar. 19, 1982; 49 FR 10091, Mar. 19, 1984; 54 FR 24892, June 12, 1989; 58 FR 2890, Jan. 6, 1993]

SECTION 131.127 Nonfat Dry Milk fortified with vitamins A and D.

(a) *Description.* Nonfat dry milk fortified with vitamins A and D conforms to the standard of identity for nonfat dry milk, except that vitamins A and D are added as prescribed by paragraph (b) of this section.

(b) *Vitamin addition*. (1) Vitamin A is added in such quantity that, when prepared according to label directions, each quart of the reconstituted product contains 2000 International Units thereof.

(2) Vitamin D is added in such quantity that, when prepared according to label directions, each quart of the reconstituted product contains 400 International Units thereof.

(3) The requirements of this paragraph will be deemed to have been met if reasonable overages, within limits of good manufacturing practice, are present to ensure that the required levels of vitamins are maintained throughout the expected shelf life of the food under customary conditions of distribution.

(c) *Optional ingredients*. The following safe and suitable optional ingredients may be used:

(1) Carriers for vitamins A and D.

(2) Characterizing flavoring ingredients, with or without coloring and nutritive carbohydrate sweetener, as follows:

(i) Fruit and fruit juice, including concentrated fruit and fruit juice.

(ii) Natural and artificial food flavorings.

(d) *Methods of analysis*. The following referenced methods of analysis are from ``Official Methods of Analysis of the Association of Official Analytical Chemists," 13th Ed. (1980), which is incorporated by reference. Copies may be obtained from the Association of Official Analytical Chemists, 2200 Wilson Blvd., Suite 400, Arlington, VA 22201-3301, or may be examined at the Office of the Federal Register, 800 North Capitol Street, NW., suite 700, Washington, DC 20001.

(1) Milkfat content-``Fat in Dried Milk-Official Final Action," sections 16.199-16.200.

(2) Moisture content-``Moisture-Official Final Action," section 16.192.

(3) Vitamin D content-``Vitamin D-Official Final Action," sections 43.195-43.208.

(e) *Nomenclature*. The name of the food is ``Nonfat dry milk fortified with vitamins A and D". If the fat content is over 1 1/2 percent by weight, the name of the food on the principal display panel or panels shall be accompanied by the statement ``Contains -% milkfat", the blank to be filled in to the nearest one-tenth of 1 percent with the percentage of fat contained within limits of good manufacturing practice. The name of the food shall include a declaration of the presence of any characterizing flavoring, as specified in Section 101.22 of this chapter.

(f) *Label declaration*. Each of the ingredients used in the food shall be declared on the label as required by the applicable sections of parts 101 and 130 of this chapter.

[42 FR 14360, Mar. 15, 1977, as amended at 43 FR 19836, May 9, 1978; 43 FR 29769, July 11, 1978; 43 FR 36622, Aug. 18, 1978; 47 FR 11823, Mar. 19, 1982; 49 FR 10091, Mar. 19, 1984; 54 FR 24892, June 12, 1989; 58 FR 2890, Jan. 6, 1993]

Section 131.3 Definitions.

(a) *Cream* means the liquid milk product high in fat separated from milk, which may have been adjusted by adding thereto: Milk, concentrated milk, dry whole milk, skim milk, concentrated skim milk, or nonfat dry milk. Cream contains not less than 18 percent milkfat.

SECTION 130.10

Requirements for Foods Named by Use of a Nutrient Content Claim and a Standardized Term.

(a) Description. The foods prescribed by this general definition and standard of identity are those foods that substitute (see Section 101.13(d) of this chapter) for a standardized food defined in parts 131 through 169 of this chapter and that use the name of that standardized food in their statement of identity but that do not comply with the standard of identity because of a deviation that is described by an expressed nutrient content claim that has been defined by FDA regulation. The nutrient content claim shall comply with the requirements of Section 101.13 of this chapter and with the requirements of the regulations in part 101 of this chapter that define the particular nutrient content claim that is used. The food shall comply with the relevant standard in all other respects except as provided in paragraphs (b), (c), and (d) of this section.

(b) Nutrient addition. Nutrients shall be added to the food to restore nutrient levels so that the product is not nutritionally inferior, as defined in Section 101.3(e)(4) of this chapter, to the standardized food as defined in parts 131 through 169 of this

chapter. The addition of nutrients shall be reflected in the ingredient statement.

(c) Performance characteristics. Deviations from noningredient provisions of the standard of identity (e.g., moisture content, food solids content requirements, or processing conditions) are permitted in order that the substitute food possesses performance characteristics similar to those of the standardized food. Deviations from ingredient and noningredient provisions of the standard must be the minimum necessary to qualify for the nutrient content claim while maintaining similar performance characteristics as the standardized food, or the food will be deemed to be adulterated under section 402(b) of the act. The performance characteristics (e.g., physical properties, flavor characteristics, functional properties, shelf life) of the food shall be similar to those of the standardized food as produced under parts 131 through 169 of this chapter, except that if there is a significant difference in performance characteristics that materially limits the uses of the food compared to the uses of the standardized food, the label shall include a statement informing the consumer of such difference (e.g., if appropriate, ``not recommended for cooking"). Such statement shall comply with the requirements of Section 101.13(d) of this chapter. The modified product shall perform at least one of the principal functions of the standardized product substantially as well as the standardized product.

(d) Other ingredients.

(1) Ingredients used in the product shall be those ingredients provided for by the standard as defined in parts 131 through 169 of this chapter and in paragraph (b) of this section, except that safe and suitable ingredients may be used to improve texture, add flavor, prevent syneresis, extend shelf life, improve appearance, or add sweetness so that the product is not inferior in performance characteristics to the standardized food defined in parts 131 through 169 of this chapter.

(2) An ingredient or component of an ingredient that is specifically required by the standard (i.e., a mandatory ingredient) as defined in parts 131 through 169 of this chapter, shall not be replaced or exchanged with a similar ingredient from another source unless the standard, as defined in parts 131 through 169 of this chapter, provides for the addition of such ingredient (e.g., vegetable oil shall not replace milkfat in light sour cream).

(3) An ingredient or component of an ingredient that is specifically prohibited by the standard as defined in parts 131 through 169 of this chapter, shall not be added to a substitute food under this section.

(4) An ingredient that is specifically required by the standard as defined in parts 131 through 169 of this chapter, shall be present in the product in a significant amount. A significant amount of an ingredient or component of an ingredient is at least that amount that is required to achieve the technical effect of that ingredient in the food.

(5) Water and fat analogs may be added to replace fat and calories in accordance with Section 130.10(c), (d)(1), and (d)(2).

(e) Nomenclature. The name of a substitute food that complies with all parts of this regulation is the appropriate expressed nutrient content claim and the applicable standardized term.

(f) Label declaration.

(1) Each of the ingredients used in the food shall be declared on the label as required by the applicable sections of part 101 of this chapter and part 130.

(2) Ingredients not provided for, and ingredients used in excess of those levels provided for, by the standard as defined in parts 131 through 169 of this chapter, shall be identified as such with an asterisk in the ingredient statement, except that ingredients

added to restore nutrients to the product as required in paragraph (b) of this section shall not be identified with an asterisk. The statement ``*Ingredient(s) not in regular ----------" (fill in name of the traditional standardized food) or ``*Ingredient(s) in excess of amount permitted in regular ----------" (fill in name of the traditional standardized food) or both as appropriate shall immediately follow the ingredient statement in the same type size.

[58 FR 2446, Jan. 6, 1993]

Effective Date Note: At 58 FR 2446, Jan. 6, 1993 Section 130.10 was added effective May 8, 1994.

Section 184.1979 Whey.

(a)(1) *Whey*. Whey is the liquid substance obtained by separating the coagulum from milk, cream, or skim milk in cheesemaking. Whey obtained from a procedure, in which a significant amount of lactose is converted to lactic acid, or from the curd formation by direct acidification of milk, is known as acid whey. Whey obtained from a procedure in which there is insignificant conversion of lactose to lactic acid is known as sweet whey. Sweet whey has a maximum titratable acidity of not more than 0.16 percent, calculated as lactic acid, and an alkalinity of ash of not more than 225 milliliters of 0.1N hydrochloric acid per 100 grams. The acidity of whey, sweet or acid, may be adjusted by the addition of safe and suitable pH-adjusting ingredients.

(2) **Concentrated whey**. Concentrated whey is the liquid substance obtained by the partial removal of water from whey, while leaving all other constituents in the same relative proportions as in whey.

(3) **Dry or dried whey**. Dry or dried whey is the dry substance obtained by the removal of water from whey, while leaving all other constituents in the same relative proportions as in whey.

(b) The ingredients meet the following specifications:

(1) The analysis of whey, concentrated whey, and dry (dried) whey, on a dry product basis, based on analytical methods in the referenced sections of ``Official Methods of Analysis of the Association of Official Analytical Chemists," 13th ed. (1980),{2} which is incorporated by reference, is:

{2} Copies may be obtained from: Association of Official Analytical Chemists, 2200 Wilson Blvd., Suite 400, Arlington, VA 22201-3301, or examined at the office of the Federal Register, 800 North Capitol Street, NW., suite 700, Washington, DC.

(i) Protein content, 10 to 15 percent-as determined by the methods prescribed in section 16.036 (liquid sample), entitled ``Total Nitrogen-Official Final Action" under the heading ``Total Solids," or in section 16.193 (dry sample), entitled ``Kjeldahl Method" under the heading ``Protein-Official Final Action."

(ii) Fat content, 0.2 to 2.0 percent-as determined by the methods prescribed in section 16.059 (liquid sample), ``Roese-Gottlieb Method [Reference Method] (11)-Official Final Action" under the heading ``Fat," or in section 16.199 (dry sample), entitled ``Fat in Dried Milk (45)-Official Final Action."

(iii) Ash content, 7 to 14 percent-as determined by the methods prescribed in section 16.035 (liquid sample), entitled ``Ash (5)-Official Final Action" under the heading ``Total Solids," or in section 16.196 (dry sample), entitled ``Ash-Official Final Action" under the heading ``Dried Milk, Nonfat Dry Milk, and Malted Milk."

(iv) Lactose content, 61 to 75 percent-as determined by the methods prescribed in section 16.057 (liquid sample), entitled ``Gravimetric Method-Official Final Action"

under the heading ``Lactose," or in section 31.061 (dry sample), entitled ``Lane-Eynon General Volumetric Method" under the heading ``Lactose-Chemical Methods-Official Final Action."

(v) Moisture content, 1 to 8 percent-as determined by the methods prescribed in section 16.192, entitled ``Moisture (41)-Official Final Action" under the heading ``Dried Milk, Nonfat Dry Milk, and Malted Milk."

(vi) Solids content, variable-as determined by the methods prescribed in section 16.032, entitled ``Method I-Official Final Action" under the heading ``Total Solids."

(vii) Titratable Acidity, variable-as determined by the methods prescribed in section 16.023, entitled ``Acidity (2)-Official Final Action" under the heading ``Milk," or by an equivalent potentiometric method.

(2) Limits of impurities are:

Heavy metals (as lead). Not more than 10 parts per million (0.001 percent) as determined by the method described in the Food Chemicals Codex, 3d ed. (1981), pp. 512-513,{1} which is incorporated by reference.

{1} Copies may be obtained from the National Academy of Sciences, 2101 Constitution Ave. NW, Washington, DC 20037, or examined at the Office of the Federal Register, 800 North Capitol Street, NW., suite 700, Washington, DC.

(3) The whey must be derived from milk that has been pasteurized, or the whey and modified whey product must be subjected to pasteurization techniques or its equivalent before use in food.

(c) Whey, concentrated whey, and dry (dried) whey may be used in food in accordance with good manufacturing practice as indicated in Section 184.1(b)(1).

(d) The label on the whey form sold to food manufacturers shall read as follows:

(1) For whey: ``(Sweet or acid) whey" or ``whey (--% titratable acidity).

(2) For concentrated whey: ``Concentrated (sweet or acid) whey, --% solids" or ``Concentrated whey (--% titratable acidity), --% solids".

(3) For dry (dried) whey: ``Dry (dried) (sweet or acid) whey" or ``dry (dried) whey, (--% titratable acidity)".

(e) Whey, concentrated whey, or dry (dried) whey in a finished food product shall be listed as ``whey."

[46 FR 44439, Sept. 4, 1981; 47 FR 7410, Feb. 19, 1982; 54 FR 24899, June 12, 1989]

Section 184.1979a Reduced lactose whey.

(a) *Reduced lactose whey* is the substance obtained by the removal of lactose from whey. The lactose content of the finished dry product shall not exceed 60 percent. Removal of the lactose is accomplished by physical separation techniques such as precipitation, filtration, or dialysis. As with whey, reduced lactose whey can be used as a fluid, concentrate, or a dry product form. The acidity of reduced lactose whey may be adjusted by the addition of safe and suitable pH-adjusting ingredients.

(b) The reduced lactose whey meets the following specifications:

(1) The analysis of reduced lactose whey, on a dry product basis, based on analytical methods in the referenced sections of ``Official Methods of Analysis of the Association of Official Analytical Chemists," 13th ed. (1980),{2} which is incorporated by reference, is:

{2} Copies may be obtained from: Association of Official Analytical Chemists, 2200 Wilson Blvd., Suite 400, Arlington, VA 22201-3301, or examined at the office of the Federal Register, 800 North Capitol Street, NW., suite 700, Washington, DC.

(i) Protein content, 16 to 24 percent-as determined by the methods prescribed in section 16.036 (liquid sample), entitled ``Total Nitrogen-Official Final Action" under the heading ``Total Solids," or in section 16.193 (dry sample), entitled ``Kjeldahl Method" under the heading ``Protein-Official Final Action."

(ii) Fat content, 1 to 4 percent-as determined by the methods prescribed in section 16.059 (liquid sample), ``Roese-Gottlieb Method [Reference Method] (11)-Official Final Action" under the heading ``Fat," or in section 16.199 (dry sample), entitled ``Fat in Dried Milk (45)-Official Final Action."

(iii) Ash content, 11 to 27 percent-as determined by the methods prescribed in section 16.035 (liquid sample), entitled ``Ash (5)-Official Final Action" under the heading ``Total Solids," or in section 16.196 (dry sample), entitled ``Ash-Official Final Action" under the heading ``Dried Milk, Nonfat Dry Milk, and Malted Milk."

(iv) Lactose content, not more than 60 percent-as determined by the methods prescribed in section 16.057 (liquid sample), entitled ``Gravimetric Method-Official Final Action" under the heading ``Lactose," or in section 31.061 (dry sample), entitled ``Lane-Eynon General Volumetric Method" under the heading ``Lactose-Chemical Methods-Official Final Action."

(v) Moisture content, 1 to 6 percent-as determined by the method prescribed in section 16.192, entitled ``Moisture (41)-Official Final Action" under the heading ``Dried Milk, Nonfat Dry Milk, and Malted Milk."

(vi) Solids content, variable-as determined by the methods prescribed in section 16.032, entitled ``Method I-Official Final Action" under the heading ``Total Solids."

(vii) Titratable Acidity, variable-as determined by the methods prescribed in section 16.023, entitled ``Acidity (2)-Official Final Action" under the heading ``Milk," or by an equivalent potentiometric method.

(2) Limits of impurities are:

Heavy metals (as lead). Not more than 10 parts per million (0.001 percent), as determined by the method described in the Food Chemicals Codex, 3d ed. (1981), pp. 512-513,{1} which is incorporated by reference.

{1} Copies may be obtained from the National Academy of Sciences, 2101 Constitution Ave. NW, Washington, DC 20037, or examined at the Office of the Federal Register, 800 North Capitol Street, NW., suite 700, Washington, DC.

(3) The reduced lactose whey shall be derived from milk that has been pasteurized, or the reduced lactose whey shall be subjected to pasteurization techniques or its equivalent before use in food.

(c) Reduced lactose whey may be used in food in accordance with good manufacturing practice as indicated in Section 184.1(b)(1).

(d) The percent of lactose present on a dry product basis, i.e., ``reduced lactose whey (--% lactose)", shall be declared on the label of the package sold to food manufacturers. The percent of lactose may be declared in 5-percent increments, expressed as a multiple of 5, not greater than the actual percentage of lactose in the product, or as a actual percentage provided that an analysis of the product on which the actual percentage is based is supplied to the food manufacturer.

(e) The presence of reduced lactose whey in a finished food product shall be listed as ``reduced lactose whey."

[46 FR 44440, Sept. 4, 1981, as amended at 54 FR 24899, June 12, 1989]

NOTE: At the time this document was printed, the FDA was in the process of considering a petition that could result in the elimination or reduction of the milkfat

requirement for reduced lactose whey, reduced minerals whey and whey protein concentrate.

Section 184.1979b Reduced minerals whey.

(a) *Reduced minerals whey* is the substance obtained by the removal of a portion of the minerals from whey. The dry product shall not contain more than 7 percent ash. Reduced minerals whey is produced by physical separation techniques such as precipitation, filtration, or dialysis. As with whey, reduced minerals whey can be used as a fluid, concentrate, or a dry product form. The acidity of reduced minerals whey may be adjusted by the additional of safe and suitable pH-adjusting ingredients.

(b) The reduced minerals whey meets the following specifications:

(1) The analysis of reduced minerals whey, on a dry product basis, based on analytical methods in the referenced sections of ``Official Methods of Analysis of the Association of Official Analytical Chemists, 13th ed. (1980),{2} which is incorporated by reference, is:

{2} Copies may be obtained from: Association of Official Analytical Chemists, 2200 Wilson Blvd., Suite 400, Arlington, VA 22201-3301, or examined at the Office of the Federal Register, 800 North Capitol Street, NW., suite 700, Washington, DC.

(i) Protein content, 10 to 24 percent-as determined by the methods prescribed in section 16.036 (liquid sample), entitled ``Total Nitrogen-Official Final Action" under the heading ``Total Solids," or in section 16.193 (dry sample), entitled ``Kjeldahl Method" under the heading ``Protein-Official Final Action."

(ii) Fat content, 1 to 4 percent-as determined by the methods prescribed in section 16.059 (liquid sample), ``Roese-Gottlieb Method [Reference Method] (11)-Official Final Action" under the heading ``Fat," or in section 16.199 (dry sample), entitled ``Fat in Dried Milk (45)-Official Final Action."

(iii) Ash content, maximum 7 percent-as determined by the methods prescribed in section 16.035 (liquid sample), entitled ``Ash (5)-Official Final Action" under the heading ``Total Solids," or in section 16.196 (dry sample), entitled ``Ash-Official Final Action" under the heading ``Dried Milk, Nonfat Dry Milk, and Malted Milk."

(iv) Lactose content, maximum 85 percent-as determined by the methods prescribed in section 16.057 (liquid sample), entitled ``Gravimetric Method-Official Final Action" under the heading ``Lactose," or in section 31.061 (dry sample), entitled ``Lane-Eynon General Volumetric Method" under the heading ``Lactose-Chemical Methods-Official Final Action."

(v) Moisture content, 1 to 6 percent-as determined by the methods prescribed in section 16.192, entitled ``Moisture (41)-Official Final Action" under the heading ``Dried Milk, Nonfat Dry Milk, and Malted Milk."

(vi) Solids content, variable-as determined by the methods prescribed in section 16.032, entitled ``Method I-Official Final Action" under the heading ``Total Solid."

(vii) Titratable Acidity, variable-as determined by the methods prescribed in section 16.023, entitled ``Acidity (2)-Official Final Action" under the heading ``Milk," or by an equivalent potentiometric method.

(2) Limits of impurities are: Heavy metals (as lead). Not more than 10 parts per million (0.001 percent), as determined by the method described in the Food Chemicals Codex, 3d ed. (1981), pp. 512-513,{1} which is incorporated by reference.

1} Copies may be obtained from the National Academy of Sciences, 2101

Constitution Ave. NW, Washington, DC 20037, or examined at the Office of the Federal Register, 800 North Capitol Street, NW., suite 700, Washington, DC.

(3) The reduced minerals whey shall be derived from milk that has been pasteurized, or the reduced minerals whey shall be subjected to pasteurization techniques or its equivalent before use in food.

(c) The reduced minerals whey may be used in food in accordance with good manufacturing practice as indicated in Section 184.1(b)(1).

(d) The percent of minerals present on a dry product basis, i.e., ``reduced minerals whey (--% minerals)", shall be declared on the label of the package sold to food manufacturers. The percent of minerals may be declared in 2-percent increments expressed as a multiple of 2, not greater than the actual percentage of minerals in the product, or as an actual percentage provided that an analysis of the product on which the actual percentage is based is supplied to the food manufacturer.

(e) The presence of reduced minerals whey in a finished food product shall be listed as ``reduced minerals whey".

[46 FR 44441, Sept. 4, 1981, as amended at 54 FR 24899, June 12, 1989]

NOTE: At the time this document was printed, the FDA was in the process of considering a petition that could result in the elimination or reduction of the milkfat requirement for reduced lactose whey, reduced minerals whey and whey protein concentrate.

Section 184.1979c Whey protein concentrate.

(a) *Whey protein concentrate* is the substance obtained by the removal of sufficient nonprotein constituents from whey so that the finished dry product contains not less than 25 percent protein. Whey protein concentrate is produced by physical separation techniques such as precipitation, filtration, or dialysis. As with whey, whey protein concentrate can be used as a fluid, concentrate, or dry product form. The acidity of whey protein concentrate may be adjusted by the addition of safe and suitable pH-adjusting ingredients.

(b) The whey protein concentrate meets the following specifications:

(1) The analysis of whey protein concentrate, on a dry product basis, based on analytical methods in the referenced sections of ``Official Methods of Analysis of the Association of Official Analytical Chemists," 13th ed. (1980),{2} which is incorporated by reference, is:

{2} Copies may be obtained from: Association of Official Analytical Chemists, 2200 Wilson Blvd., Suite 400, Arlington VA 22201-3301, or examined at the office of the Federal Register, 800 North Capitol Street, NW., suite 700, Washington, DC.

(i) Protein content, minimum 25 percent-as determined by the methods prescribed in section 16.036 (liquid sample), entitled ``Total Nitrogen-Officials Final Action" under the heading ``Total Solids," or in section 16.193 (dry sample), entitled ``Kjeldahl Method" under the heading ``Protein-Official Final Action."

(ii) Fat content, 1 to 10 percent-as determined by the methods prescribed in section 16.059 (liquid sample), ``Roese-Gottlieb Method [Reference Method] (11)-Official Final Action" under the heading ``Fat," or in section 16.199 (dry sample),

entitled ``Fat in Dried Milk (45)-Official Final Action."

(iii) Ash content, 2 to 15 percent-as determined by the methods prescribed in section 16.035 (liquid sample), entitled ``Ash (5)-Official Final Action" under the heading ``Total Solids," or in section 16.196 (dry sample), entitled ``Ash-Official Final Action" under the heading ``Dried Milk, Nonfat Dry Milk, and Malted Milk."

(iv) Lactose content, maximum 60 percent-as determined by the methods prescribed in section 16.057 (liquid sample), entitled ``Gravimetric Method-Official Final Action" under the heading ``Lactose," or in section 31.061 (dry sample), entitled ``Lane-Eynon General Volumetric Method" under the heading ``Lactose-Chemical Methods-Official Final Action."

(v) Moisture content, 1 to 6 percent-as determined by the methods prescribed in section 16.192, entitled ``Moisture (41)-Official Final Action" under the heading ``Dried Milk, Nonfat Dry Milk, and Malted Milk."

(vi) Solids content, variable-as determined by the methods prescribed in section 16.032, entitled ``Method I-Official Final Action" under the heading ``Total Solids."

(vii) Titratable Acidity, variable-as determined by the methods prescribed in section 16.023, entitled ``Acidity (2)-Official Final Action" under the heading ``Milk," or by an equivalent potentiometric method.

(2) Limits of impurities are:

Heavy metals (as lead). Not more than 10 parts per million (0.001 percent), as determined by the method described in the Food Chemicals Codex, 3d ed. (1981), pp. 512-513,{1} which is incorporated by reference.

{1} Copies may be obtained from the National Academy of Sciences, 2101 Constitution Ave. NW, Washington, DC 20037, or examined at the Office of the Federal Register, 800 North Capitol Street, NW., suite 700, Washington, DC.

(3) The whey protein concentrate shall be derived from milk that has been pasteurized, or the whey protein concentrate shall be subjected to pasteurization techniques or its equivalent before use in food.

(c) The whey protein concentrate may be used in food in accordance with good manufacturing practice as indicated in Section 184.1(b)(1).

(d) The percent of protein present on a dry product basis, i.e., ``whey protein concentrate (--% protein)", shall be declared on the label of the package sold to food manufacturers. The percent of protein may be declared in 5-percent increments, expressed as a multiple of 5, not greater than the actual percentage of protein in the product, or as an actual percentage provided that an analysis of the product on which the actual percentage is based is supplied to the food manufacturer.

(e) The presence of whey protein concentrate in a finished food product shall be listed as ``whey protein concentrate".

[46 FR 44441, Sept. 4, 1981, as amended at 54 FR 24899, June 12, 1989]

NOTE: At the time this document was printed, the FDA was in the process of considering a petition that could result in the elimination or reduction of the milkfat requirement for reduced lactose whey, reduced minerals whey and whey protein concentrate.

The following definitions have been reproduced from the *Code of Federal Regulations*, Title 7, for reference purposes:

Section 58.2651 Dry buttermilk and dry buttermilk product.

(a) Dry buttermilk (made by the spray process or the atmospheric roller process) is the product resulting from drying liquid buttermilk that was derived from the churning of butter and pasteurized prior to condensing at a temperature of 161 degs.F for 15 seconds or its equivalent in bacterial destruction. Dry buttermilk shall have a protein content of not less than 30.0 percent. Dry buttermilk shall not contain nor be derived from nonfat dry milk, dry whey, or products other than buttermilk, and shall not contain any added preservative, neutralizing agent, or other chemical.

(b) Dry buttermilk product (made by the spray process or the atmospheric roller process) is the product resulting from drying liquid buttermilk that was derived from the churning of butter and was pasteurized prior to condensing at a temperature of 161 degs.F for 15 seconds or its equivalent in bacterial destruction. Dry buttermilk product has a protein content less than 30.0 percent. Dry buttermilk product shall not contain nor be derived from nonfat dry milk, dry whey, or products other than buttermilk, and shall not contain any added preservative, neutralizing agent, or other chemical.

Section 58.2601 Whey. "Whey" is the fluid obtained by separating the coagulum from milk, cream, and/or skim milk in cheesemaking. The acidity of the whey may be adjusted by the addition of safe and suitable pH adjusting ingredients. Moisture removed from cheese curd as a result of salting may be collected for further processing as whey if the collection of the moisture and the removal of the salt from the moisture are conducted in accordance with procedures approved by the Administrator.

Section 58.334 Pasteurization.

The milk or cream shall be pasteurized at the plant where the milk or cream is processed into the finished product or by procedures as set forth by the Administrator.

(a) Cream for butter making. The cream for butter making shall be pasteurized at a temperature of not less than 165 degs. F. and held continuously in a vat at such temperature for not less than 30 minutes; or pasteurized by HTST method at a minimum temperature of not less than 185 degs. F. for not less than 15 seconds; or it shall be pasteurized by any other equivalent temperature and holding time which will assure adequate pasteurization. Additional heat treatment above the minimum pasteurization requirement is advisable to insure improved keeping-quality characteristics.

Adequate pasteurization control shall be used and the diversion valve shall be set to divert at no less than 185 degs. F. with a 15 second holding time or its equivalent in time and temperature to assure pasteurization. If the vat or holding method of pasteurization is used, vat covers shall be closed prior to holding period to assure temperature of air space reaching 5 degs. F. higher than the minimum temperature during the holding time. Covers shall also be kept closed during the holding and cooling period.

(b) Cream for plastic or frozen cream. The pasteurization of cream for plastic or frozen cream shall be accomplished in the same manner as in paragraph (a) of this section, except, that the temperature for the vat method shall be not less than 170 degs. F. for not less than 30 minutes, or not less than 190 degs. F. for not less than 15 seconds or by any other temperature and holding time which will assure adequate pasteurization and comparable keeping-quality characteristics.

The following sections have been reproduced from the *Federal Food, Drug, and Cosmetic Act, as amended* for reference purposes.

ADULTERATED FOOD

Sec. 402 [342]. A food shall be deemed to be adulterated:

(a)(1) If it bears or contains any poisonous or deleterious substance which may render it injurious to health; but in case the substance is not an added substance such food shall not be considered adulterated under this clause if the quantity of such substance in such food does not ordinarily render it injurious to health; or

(2)(A) If it bears or contains any added poisonous or added deleterious substance (other than one which is (i) a pesticide chemical in or on a raw agricultural commodity; (ii) a food additive; (iii) a color additive; or (iv) a new animal drug) which is unsafe within the meaning of Section 406, or (B) if it is a raw agricultural commodity and it bears or contains a pesticide chemical which is unsafe within the meaning of Section 408(a); or (C) if it is, or it bears or contains, any food additive which is unsafe within the meaning of Section 409. *Provided*, That where a pesticide chemical has been used in or on a raw agricultural commodity in conformity with an exemption granted or a tolerance prescribed under Section 408 and such raw agricultural commodity has been subjected to processing such as canning, cooking, freezing, dehydrating, milling, the residue of such pesticide chemical remaining in or on such processed food shall, not withstanding the provisions of Sections 406 and 409, not be deemed unsafe if such residue in or on the raw agricultural commodity has been removed to the extent possible in good manufacturing practice and the concentration of such residue in the processed food when ready to eat is not greater than the tolerance prescribed for the raw agricultural commodity; or (D) if it is, or it bears or contains, a new animal drug (or conversion product thereof) which is unsafe within the meaning of Section 512; or

(3) If it consists in whole or in part of any filthy, putrid or decomposed substance, or if it is otherwise unfit for food; or

(4) If it has been prepared, packed, or held under insanitary conditions whereby it may have become contaminated with filth, or whereby it may have been rendered injurious to health; or

(5) If it is, in whole or in part, the product of a diseased animal or of an animal which has died otherwise than by slaughter; or

(6) If its container is composed, in whole or in part, of any poisonous or deleterious substance which may render the contents injurious to health; or

(7) If it has been intentionally subjected to radiation, unless the use of the radiation was in conformity with a regulation or exemption in effect pursuant to Section 409.

(b)(1) If any valuable constituent has been in whole or in part omitted or abstracted therefrom; or

(2) If any substance has been substituted wholly or in part therefor; or

(3) If damage or inferiority has been concealed in any manner; or

(4) If any substance has been added thereto or mixed or packed therewith so as to increase its bulk or weight, or reduce its quality or strength, or make it appear better or of greater value than it is.

(c) If it is, or it bears or contains, a color additive which is unsafe within the meaning of Section 706(a).

(d) If it is confectionery, and--

(1) Has partially or completely imbedded therein any non-nutritive object. *Provided*, That this clause shall not apply in the case of any non-nutritive object if, in the judgment of the Secretary as provided by regulations, such object is of practical functional value to the confectionery product and would not render the product injurious or hazardous to health;

(2) Bears or contains any alcohol other than alcohol not in excess of one-half of 1 percent by volume derived solely from the use of flavoring extracts; or

(3) Bears or contains any non--nutritive substance. *Provided*, That this clause shall not apply to a safe non-nutritive substance which is in or on confectionery by reason of its use for some practical functional purpose in the manufacture, packaging, or storage of such confectionery if the use of the substance does not promote deception of the consumer or otherwise result in adulteration or misbranding in violation of any provision of this Act: *And provided further*, That the Secretary may, for the purpose of avoiding or resolving uncertainty as to the application of this clause, issue regulations allowing or prohibiting the use of particular non-nutritive substances.

(3) If it is oleomargarine or margarine or butter and any of the raw material used therein consisted in whole or in part of any filthy, putrid, or decomposed substance, or such oleomargarine or margarine or butter is otherwise unfit for food.

MISBRANDED FOOD

Sec. 403[343]. A food shall be deemed to be misbranded - -:

(a) If (1) Its labeling is false or misleading in any particular, or (2) In the case of a food to which Section 411 applies its advertising, is false or misleading in a material respect or its labeling is in violation of Sec. 411(b)(2).

(b) If it is offered for sale under the name of another food.

(c) If it is an imitation of another food, unless its label bears, in type of uniform size and prominence, the word "imitation" and, immediately thereafter, the name of the food imitated.

(d) If its container is so made, formed, or filled as to be misleading.

(e) If in package form unless it bears a label containing:

(1) The name and place of business of the manufacturer, packer, or distributor; and

(2) An accurate statement of the quantity of the contents in terms of weight, measure, or numerical count. *Provided*, That under clause (2) of this paragraph reasonable variations shall be permitted, and exemptions as to small packages shall be established, by regulations prescribed by the Secretary.

(f) If any word, statement, or other information required by or under authority of this Act to appear on the label or labeling is not prominently placed thereon with such conspicuousness (as compared with other words, statements, designs, or devices, in the labeling) and in such terms as to render it likely to be read and understood by the ordinary individual under customary conditions of purchase and use.

(g) If it purports to be or is represented as a food for which a definition and

standard of identity has been prescribed by regulations as provided by Section 401, unless:

(1) It conforms to such definition and standard, and

(2) Its label bears the name of the food specified in the definition and standard, and, insofar as may be required by such regulations, the common names of optional ingredients (other than spices, flavoring, and coloring) present in such food.

(h) If it purports to be or is presented as--

(1) A food for which a standard of quality has been prescribed by regulations as provided by Section 401, and its quality falls below such standard, unless its label bears, in such manner and form as such regulations specify, a statement that it falls below such standard; or

(2) A food for which a standard or standards of fill of container have been prescribed by regulations as provided by Section 401, and it falls below the standard of fill of container applicable thereto, unless its label bears, in such manner and form as such regulations specify, a statement that it falls below such standard.

(i) If it is not subject to the provisions of paragraph (g) of this Section, unless its label bears:

(1) The common or usual name of the food, if any there by, and

(2) In case it is fabricated from two or more ingredients, the common or usual name of each such ingredient; except that spices, flavorings, and colorings, other than those sold as such, may be designated as spices, flavorings, and colorings without naming each. *Provided*, That, to the extent that compliance with the requirements of clause (2) of this paragraph is impracticable, or results in deception or unfair competition, exemptions shall be established by regulations promulgated by the Secretary.

(j) If it purports to be or is represented for special dietary uses, unless its label bears such information concerning its vitamin, mineral, and other dietary properties as the Secretary determines to be, and by regulations prescribes as, necessary in order fully to inform purchasers as to its value for such uses.

(k) If it bears or contains any artificial flavoring, artificial coloring, or chemical preservative, unless it bears labeling stating that fact. *Provided*, That to the extent that compliance with the requirements of this paragraph is impracticable, exemptions shall be established by regulations promulgated by the Secretary. The provisions of this paragraph and paragraphs (g) and (i) with respect to artificial coloring shall not apply in the case of butter, cheese, or ice cream. The provisions of this paragraph with respect to chemical preservatives shall not apply to a pesticide chemical when used in or on a raw agricultural commodity which is the produce of the soil.

(l) If it is a raw agricultural commodity which is the produce of the soil, bearing or containing a pesticide chemical applied after harvest, unless the shipping container of such commodity bears labeling which declares the presence of such chemical in or on such commodity and the common or usual name and the function of such chemical. *Provided, however,* That no such declaration shall be required, while such commodity, having been removed from the shipping container, is being held or displayed for sale at retail out of such container in accordance with the custom of the trade.

(m) If it is a color additive, unless its packaging and labeling are in conformity

with such packaging and labeling requirements, applicable to such color additive, as may be contained in regulations issued under Section 706.

(n) If its packaging or labeling is in violation of an applicable regulation issued pursuant to Section 3 and 4 of the *Poison Prevention Packaging Act of 1970*.

(o)(1) If it contains saccharin, unless, except as provided in subparagraph (2), its label and labeling bear the following statement: *`USE OF THIS PRODUCT MAY BE HAZARDOUS TO YOUR HEALTH. THIS PRODUCT CONTAINS SACCHARIN WHICH HAS BEEN DETERMINED TO CAUSE CANCER IN LABORATORY ANIMALS'*. Such statement shall be located in a conspicuous place on such label and labeling as proximate as possible to the name of such food and shall appear in conspicuous and legible type in contrast by typography, layout, and color with other printed matter on such label and labeling.

(2) The Secretary may by regulation review and revise or remove the requirement of subparagraph (1) if the Secretary determines such action is necessary to reflect the current state of knowledge concerning saccharin.

(p)(1) If it contains saccharin and is offered for sale, but not for immediate consumption, at a retail establishment, unless such retail establishment displays prominently, where such food is held for sale, notice (provided by the manufacturer of such food pursuant to subparagraph (2)) for consumers respecting the information required by paragraph (o) to be on food labels and labeling.

(2) Each manufacturer of food which contains saccharin and which is offered for sale by retail establishments but not for immediate consumption shall, in accordance with regulations promulgated by the Secretary pursuant to subparagraph (4), take such action as may be necessary to provide such retail establishments with the notice required by subparagraph (1).

(3) The Secretary may by regulation review and revise or remove the requirement of subparagraph (1) if he determines such action is necessary to reflect the current state of knowledge concerning saccharin.

(4) The Secretary shall by regulation prescribe the form, text, and manner of display of the notice required by subparagraph (1) and such other matters as may be required for the implementation of the requirements of that subparagraph and subparagraph (2). Regulations of the Secretary under this subparagraph shall be promulgated after an oral hearing but without regard to the National Environmental Policy Act of 1969 and Chapter 5 of Title 5, United States Code. In any action brought for judicial review of any such regulation, the reviewing court may not postpone the effective date of such regulation.

SECTION 173.310
Boiler Water Additives.

Boiler water additives may be safely used in the preparation of steam that will contact food, under the following conditions:

(a) The amount of additive is not in excess of that required for its functional purpose, and the amount of steam in contact with food does not exceed that required to produce the intended effect in or on the food.

(b) The compounds are prepared from substances identified in paragraphs (c) and (d) of the section, and are subject to the limitations, if any, prescribed:

(C) List of substances:

SUBSTANCES	LIMITATIONS
Acrylamide-sodium acrylate resin.....	Contains not more than 0.05 percent by weight of acrylamide monomer.
Acrylic acid/2-acrylamido-2-methyl propane sulfonic acid copolymer having a minimum weight average molecular weight of 9,900 and a minimum number average molecular weight of 5,700.....	Total not to exceed 20 parts per million (active) in boiler feed water.
Ammonium alginate.....	
Cobalt sulfate (as catalyst).....	
1-hydroxyethylidene-1, 1-diphosphonic acid(CAS reg. no. 2809-21-4) and its sodium and potassium salts.....	
Lignosulfonic acid.....	Minimum mol. wt. 1,500.
Monobutyl ethers of polyethylene-polypropylene glycol produced by random condensation of a 1:1 mixture by weight of ethylene oxide and propylene oxide with butanol.....	
Poly(acrylic acid-*co*-hypophosphite), sodium salt (CAS Reg. No. 71050-62-9), produced from a 4:1 mixture by weight of acrylic acid and sodium hypophosphite.....	Total not to exceed 1.5 parts per million in boiler feed water. Copolymer contains not more than 0.5 percent by weight of acrylic acid monomer (dry weight basis).
Polyethylene glycol.....	As defined in § 172.820 of this chapter.
Polymaleic acid (CAS Reg. No. 26099-09-2), and/or its sodium salt. (CAS Reg No. 30915-61-8).....	Total not to exceed 1 part per million in boiler feed water (calculated as the acid).
Polyoxypropylene glycol.....	Minimum mol.wt. 1,000.
Potassium carbonate.....	
Potassium tripolyphosphate.....	
Sodium acetate.....	
Sodium alginate.....	
Sodium aluminate.....	
Sodium carbonate.....	
Sodium carboxyl-methylcellulose.....	Contains not less than 95 percent sodium carboxyl methylcellulose on a dry-weight basis, with maximum substitution of 0.9 carboxyl-methylcellulose groups per anhydroglucose unit, and with a minimum viscosity of 15 centipoises for 2 percent by weight aqueous solution at 25°C; by method prescribed in the "Food Chemicals Codex," 3d Ed. (1981) pp. 280-282, which is incorporated by reference. Copies may be obtained from the National Academy Press, 2101 Constitution Ave., NW, Washington, D.C. 20418, or may be examined at the Office of the Federal Register, 1100 L St. NW, Washington, D. C. 20408.
Sodium glucoheptonate.....	Less than 1 part per million cyanide in the sodium glucoheptonate.
Sodium hexametaphosphate.....	
Sodium humate.....	
Sodium hydroxide.....	
Sodium lignosulfonate.....	
Sodium metabisulfite.....	
Sodium metasilicate.....	
Sodium nitrate.....	
Sodium phosphate (mono-, di-, tri-).....	
Sodium polyacrylate.....	
Sodium polymethacrylate.....	
Sodium silicate.....	
Sodium sulfate.....	
Sodium sulfite (neutral or alkaline).....	
Sodium tripolyphosphate.....	
Tannin (including quebracho extract).....	
Tetrasodium EDTA.....	
Tetrasodium pyrophosphate.....	

(d) Substances used alone or in combination with substances in paragraph (c) of this section:

SUBSTANCES	LIMITATIONS
Cyclohexylamine.....	Not to exceed 10 parts per million in steam, and excluding use of such steam in contact with milk and milk products.
Diethylaminoethanol.....	Not to exceed 15 parts per million in steam, and excluding use of such steam in contact with milk and milk products.
Hydrazine.....	Zero in steam.
Morpholine.....	Not to exceed 10 parts per million in steam, and excluding use of such steam in contact with milk and milk products.
Octadecylamine.....	Not to exceed 3 parts per million in steam, and excluding use of such steam in contact with milk and milk products.
Trisodium nitrilotriacetate.....	Not to exceed 5 parts per million in boiler feedwater, not to be used where steam will be in contact with milk and milk products.

(e) To assure safe use of the additive, in addition to the other information required by the Act, the label or labeling shall bear:

(1) The common or chemical name or names of the additive or additives.

(2) Adequate directions for use to assure compliance with all the provisions of this section.

APPENDIX H.

EVAPORATING, DRYING AND DRY PRODUCT EQUIPMENT CLEANING

PART A--CLEANING

I. CLEANING OF EVAPORATORS AND CONDENSERS

Some evaporators are designed so that the product is exposed to large surface areas for a long period of time at temperatures conducive to the growth of microorganisms. Pipelines and/or equipment designed for automated mechanical cleaning of evaporators should meet the following requirements:

1. A pH recording device should be installed in the return solution line to record the pH and time which the line or equipment is exposed during the cleaning and sanitizing operation.
2. These pH recording charts should be identified, dated, and retained for 3 months.
3. During each official inspection the regulatory agency should examine and initial the pH recording charts to verify the time of exposure to the cleaning solutions and their pH.

The following are suggested procedures for cleaning and sanitizing evaporators and condensers:

The surface area inside an evaporator is extremely large. Not only is there a large separator chamber and vapor lines but steam chests may also have as many as 500 to 1400 heating tubes from 10 to 50 feet long. The total surface area may be 4,000 to 35,000 square feet which may require large volumes for recirculation. This surface area must be cleaned and sanitized carefully or it will contaminate the product. The operating temperatures in an evaporator are very close to the growing temperatures of thermoduric and certain mesophilic types of bacteria. The first effect may operate at 60ºC to 77ºC (140ºF to 170ºF), the second effect at 52ºC to 63ºC (125ºF to 145ºF), and the third effect at 38ºC to 49ºC (100ºF to 120ºF). The product being evaporated is often recirculated in the last effect several times until the right concentration is reached which may give bacteria ample time to grow. A clean evaporator operates more efficiently. It is necessary to clean the evaporators after long periods of operations because burned-on material reduces heat transfer and efficiency. A point is reached where it will be more economical to stop and clean up than to continue to operate. Evaporators need cleaning for sanitary reasons as well as for efficient operation. Tube chests and heating plates must be cleaned to get good heat transfer. If vapor lines are not cleaned, it is possible to get a back surge of vapor when the vacuum is released. This can carry soil back into the product thus lowering the quality. This soil may drop into the thermo-compression unit, block passage of vapors and actually prevent good operation. Compounds for cleaning are usually divided into two main groups:

1. The alkaline cleaners usually contain caustic with water conditioners, synthetic detergents and foam depressants added to enhance cleaning action. The purpose of the alkaline cleaner is to digest the bulk of the soil. The alkaline solutions are usually run first at concentrations ranging from 1 percent

to 3 percent at temperatures of 83ºC to 88ºC (180ºF to 190ºF) for 30 to 60 minutes.

2. Acid cleaners are usually food grade with synthetic detergents and inhibitors to prevent attack on metal surfaces. The purpose of acid cleaners is to remove mineral films, alkali cleaner residues, and shine the inside surfaces. Acid solutions are usually used last at concentrations of 0.2 percent to 0.5 percent at 60ºC to 71ºC (140ºF to 160ºF) In all cases cleaners and cleaning instructions should be followed as recommended by the manufacturer of cleaning compounds. It is also necessary to follow the recommendations and instructions of evaporator manufacturers. The evaporators operating with compressed ammonia require special cleaning precautions.

Cleaning Methods.--There are three basic methods of cleaning evaporators: boil-out; circulation; spray cleaning; or a combination of the three methods. The boil-out method is the oldest but it is still very effective. It is accomplished by rolling or boiling the cleaning solution under partial vacuum. Heat is applied by the evaporator and just enough vacuum is used to roll the solution. Cleaning solutions are elevated to the dome and upper parts by opening and closing the vacuum breaker. Hand brushing of some areas is often necessary following boil-out because it is difficult to thoroughly clean the upper surfaces with this method.

Circulation cleaning is a newer method of cleaning. The cleaning solution actually follows the product path. The solution is circulated by returning it back to the starting point. Heat is applied by a pre-heater, tube chest, or steam jet, sometimes called a boil-out nozzle. This method is not adaptable to all types of evaporators and it is usually necessary to add spray cleaning devices to thoroughly clean separators and the bottom tube sheet in steam chests.

Spray cleaning is the newest method of cleaning evaporators. Cleaning solutions are pumped through spray devices and distributed over the surfaces which are contacted by the product. Heat is applied by pre-heater, a surge tank, or on the run with live steam. When properly designed and operated spray cleaning systems are used, cleaning problems are at a minimum. Spray cleaning offers many advantages over boil-out or circulation methods of cleaning. Less water and less cleaning solution is required. This not only results in a saving of water, heat and cleaners, but more concentrated cleaning solutions can be used giving faster, more effective cleaning. Heat for the rinse water and cleaning solutions is applied externally, preventing additional burn-on in tube chests. As the evaporator is not under vacuum, less heat is required to keep solution hot, resulting in a saving of fuel. Higher temperatures can be used to improve cleaning efficiency. There are some disadvantages to spray cleaning. Spray devices cost extra money because they are specifically designed for almost every operation. Spray devices must be properly placed and designed to cover the top of the dome in the separator, the tangential inlets, the vapor lines, sight glasses, and steam chest tubes. Spray cleaning may require additional stainless steel lines to convey the solution at the necessary volumes. Larger pumps are also required to pump the necessary volume of cleaning solution. Even with these disadvantages, the advantages of savings in heat, water, cleaning compound and time outweigh the disadvantages. Sometimes there are advantages in using combined systems of cleaning. It may be possible to boil out the steam chests and spray the separators. Sometimes it is possible to circulate the steam chests and spray clean the separators or other portions of the unit. Quite often the combined systems, especially the circulation in the spray system, will work best on certain types of evaporators.

One of the biggest factors affecting the method of cleaning used is the type of evaporator. In a falling film type, circulation cleaning can be used to clean the tube chests and spray cleaning can be utilized to clean the evaporator chambers. When using a plate-type, circulation cleaning is best. In an internal type tube chest, a boil-out system for the tubes and spray cleaning of the separator works very well. With an external chest type, the entire unit can be spray cleaned. If it is a compressed ammonia operated evaporator, spray cleaning works well. Sanitizing should be done to eliminate any microorganisms which may have survived the cleaning regimen. Sanitizing can best be accomplished by using chemical sanitizers. Heat may be used if all surfaces are heated to 83ºC (180ºF) or higher. Since there is a tremendous investment in stainless steel evaporators, it is necessary to use a product which does not corrode stainless steel. Chemical sanitizers can be applied through the spray equipment or they can be applied with fogging guns.

II. HIGH PRESSURE PUMP AND HIGH PRESSURE LINES

The high pressure pump and high pressure line to the dryer nozzles may be cleaned as a separate circuit by connecting the line to the nozzle back to the drop tank and this tank connecting to the inlet of the high pressure pump. The regular product atomizing nozzles should be removed before cleaning is to be done.

Another method of cleaning the high pressure pump and lines is to include this pump and high pressure lines in the circuit when wet cleaning of some types of spray dryers. In either case a solution of 1 to 3 percent caustic heated to 72ºC (160ºF) should be circulated for at least 30 minutes. A solution of inhibited acid should be pumped through the atomizing system as a daily procedure to remove the milkstone from the high pressure pump and high pressure line. The solution of inhibited acid should be recirculated a minimum of 10 to 15 minutes and followed by a rinse with potable water.

It is also recommended that the high pressure pump head be disassembled as a daily procedure immediately following the final rinse and the parts be placed on a table or rack for air drying. When the pump is disassembled the parts are to be checked to see if they are clean, and to see if any maintenance is required to remove pits; seats are also checked at this time. Since a high pressure pump is subjected daily to extreme heavy duty, the valves and seats are recommended to be ground periodically to maintain uniform pressure on the atomizing nozzles. Prior to use, the entire system should be sanitized.

III. WET CLEANING OF DRYERS

There are several methods of wet cleaning dryers. The first method is hand brushing. The operators get into the dryer with buckets of cleaning solution and brush all surfaces of the dryer. The unit is then rinsed with a hose. Cleaning can also be done with hand operated spray guns. These spray guns are pressure pumps which operate at high pressures in low volumes; in many cases, box type dryers can be completely cleaned with the addition of a seven-foot extension on these pressure guns. By using high pressure spray guns and cleaning compounds with a high synthetic detergent content, it is possible to remove very difficult soil. The third method of wet cleaning is by spray cleaning with various types of stationary or rotating spray devices. They usually operate at a high volume of low pressure in the range of 69 to 138 kPa (10 to 20 psi). Constant spray coverage can be obtained when spray devices are properly designed. Usually several spray devices are

required because of the many chambers, collectors, and down pipes within these units. Less time is required to do a complete job with spray cleaning. The systems are installed so that cleaning lines are easily connected to the spray devices and an effective return system. Spray cleaning time is much shorter than hand cleaning time, especially in large units. Spray cleaning eliminates the entry of men into the drying units. Silo or vertical type dryers are often 6.2 to 30.4 meters (20 to 100 ft.) high and it is difficult and dangerous to clean by hand or by hand operated units. Spray cleaning eliminates the flavor contamination when switching to other products. If an ungraded product is run through the dryer, it is necessary to thoroughly clean before running a product like Grade A nonfat powder. There are disadvantages to spray cleaning. The spray devices must be properly placed and designed to do the complete cleaning job. They must be removable so as not to affect the air currents during operation. However, the advantages of safety plus cleaning time and consistently complete cleaning outweigh the disadvantages. A typical spray cleaning cycle might operate as follows:

The various spray heads are placed in the dryer and securely fastened into place. The rinse water is pumped through the spray device and allowed to run down the side walls of the drying units. Cleaning compounds which are mild alkalis or chlorinated cleaned-in-place cleaners are prepared at 0.3 to 1 percent concentration heated to 71° to 83°C (160° to 180°F), and circulated for 45 minutes to 1 hour. The unit is given a final rinse and is thoroughly dried. Occasionally acid type cleaners are used to control mineral films. Sanitizing with chemical sanitizers is a controversial subject. Sanitizing can be done with heat but it may be difficult to heat all surfaces to 180°F (83°C). Heating to 180°F (83°C) for 10 minutes does not kill spore formers. However, they are killed with many chemical sanitizers. Even if heat is used, it is recommended that chemical sanitizers be occasionally used. By pumping the sanitizer solution to the high pressure pump or by fogging with high pressure, it is possible to completely cover the product-contact surface. Actually, the unit must be thoroughly dried before operation. Chlorine sanitizers may cause corrosion. Obviously, these compounds should be used with care. If chlorine is left on the dryer and heat is applied, the chlorine droplets will become hot and concentrate and cause pitting. When chlorinated cleaners are used, a dryer surface can be effectively cleaned and at least partially sanitized and the solution can be completely rinsed. Acid-synthetic detergent type sanitizers have been developed which are effective on spore formers. These compounds are germicidal, effective in hard water and stable in hot or cold solutions. They have an advantage in that they are noncorrosive to dairy metal. It is not necessary to wet clean dryers on a daily basis. However, a schedule should be set up so cleaning is done periodically. As long as a dryer is operating continuously, it is not necessary to clean it from an efficiency standpoint. Some types of dryers require very little cleaning, maybe once each month; others require dry cleaning on a more frequent basis. It is necessary to clean and sanitize dryers if they are going to remain idle any appreciable length of time. Bacteria may grow in dryers which remain idle. Dryers must be spray cleaned if they are improperly operated, causing burn-on in the drying chamber. Whenever fires develop inside the drying unit or when burn-on occurs, it is necessary to thoroughly clean at least the drying chambers. Quality is the key to the dry milk industry. There should be a program of cleaning and sanitizing of both evaporators and dryers. Better quality products are produced in evaporators and dryers when thoroughly cleaned and sanitized on a regular basis.

IV. DRY CLEANING

It is very difficult to discuss proper cleaning procedures without also discussing proper operating procedures, especially the start up and shutdown of the dryer. Assuming the dryer has been properly started and operated throughout the run or drying cycle, the first step in a successful cleaning operation is shutting the dryer down properly. The type of energy supplying heat to the dryer chamber, i.e., steam or gas, alters the proper shutdown technique. The correct procedure in shutting down a steam heated dryer is as follows:

1. Shut off the main steam valve at the proper time.

2. Maintain proper dryer outlet temperature for drying by gradually reducing the output of the high pressure pump until the residual heat of the steam coil is dissipated to a point where it does not maintain proper temperature or until the product being pumped by the high pressure pump does not maintain a satisfactory spray pattern.

3. Keep product removal system and conveying system in operation.

4. Keep air intake and exhaust fans on dryer in operation until main chamber is sufficiently cooled to provide a comfortable atmosphere for the cleanup crew.

On a gas-fired spray dryer, the burner assembly has very little or no residual heat capacity. Therefore, the shutdown is more rapid. The correct procedure for shutting down a gas-fired dryer is as follows:

1. Shut off gas supply to burner.

2. Immediately shut off high pressure pump.

3. Same procedure as steam heated dryer. 4. Same procedure as steam heated dryer. After the above procedures have been accomplished, shut down the intake fan. Let exhaust fan and vibrators or shakers continue to operate, also product removal system. The exhaust fan should be severely dampered so that it induces only a small air flow. A small auxiliary fan is sometimes used in lieu of the dampered exhaust fan. The use of either fan serves a twofold purpose: first, it is helpful to put the drying system under a slight negative pressure to reduce the tendency for product to drift out of the system into the plant through open doors, etc. Secondly, it is vital to prevent thermal currents from creating a reverse air flow through the drying system, which tends to deposit product on the heating surfaces and plenum duct. Product deposits on steam coils reduce their heating ability, create sediment and conceivably bacterial problem areas. If the dryer is gas fired, there is a further hazard of fire. It is important, therefore, that the closure or covers supplied by the manufacturer be placed on the inlet air duct system simultaneous with the shutdown of the fan. After any prime product has been removed from the drying system, the system is ready for cleaning. The cleanup crew should be supplied each day with a freshly laundered set of coveralls, white cap, white face mask, and clean rubbers or boot covers (canvas, or single-service plastic). Prior to donning the above uniform, the procedure is to remove the spray nozzles and pipes as these are normally cleaned with the liquid dryer feed equipment. With clean uniforms, proper brushes and preferably vacuum cleaning equipment, they enter the main desiccator chamber and start the cleaning process as far upstream as possible from the powder removal or pneumatic conveyor system.

1. The first portion cleaned is the collector system. This is done by inserting a brush into the cloth tubes and brushing the length of the tube. Again, this can be done more satisfactorily by utilizing the special vacuum tools designed and available for this service.

2. Remove dust covers and brush or vacuum out nozzle ports.

3. Manually brush or vacuum ceiling and walls of drying chamber.

4. Sweep or vacuum clean floor of the dryer, placing product in a container.

Note.--Do not remove this product by way of product removal system.

5. Inspect dryer for any inadvertent wet spraying or nozzle drippings that may have occurred during the drying cycle. Should either of these have occurred, the application of a minimum amount of water and effort will be required to remove the clinging material. Any moisture introduced must be removed before operation because of its effect upon smooth product flow and because it would establish a more favorable environment for bacterial growth if it were allowed to remain.

6. Check collector for loose or torn bags and any other mechanical checks necessary before leaving the dryer.

7. Close dryer securely and check switches to make sure they are in the proper starting positions. At frequent intervals, not over a two-week period, the operator should clean and inspect the heated air intakes of the dryer, assuming that the dryer is properly operated during this time. However, should a malfunction occur where the dryer operator does not follow the procedures outlined for proper shutdown, it may require inspection and cleaning at closer intervals. Frequent inspection will eliminate a source of sediment contamination.

8. On start up after dry cleaning of the cloth collector dryer, the first two bags of product shall be discarded. This will allow for the removal of any product remaining in the tubes and system after shutdown.

V. AUXILIARY DRY PRODUCT EQUIPMENT

PART A. SIFTERS

In general, there are two types of dry product sifters in use by the dry milk manufacturing industry. These are the shaker type and the rotary or gyrating type. Both are designed to operate at various capacities either manually bagging or packaging from their outlet or designed for automatic packaging equipment.

For the general guidance of sifter manufacturers and the dry milk industry, the following screen size openings may be considered as recommended openings to result in satisfactory screening of the listed dry products:

Table 7.

Product	Sieve designation (from ATSM 223.1)	Maximum sieve opening (approx.)	
		mm	inch
Nonfat dry milk	#25	0.707	0.027
Dry whole and dry buttermilk	#16	1.19	0.047

It is recognized that larger screen size openings may be necessary for sifting certain special dry products (such as "instant" products) and for classification of products into different particle sizes.

Openings referred to above are based on general experience as to what constitutes satisfactory screening to remove product lumps or potential product contamination, and also on ability of most currently used sifters to successfully sift dry products through such size openings without excessive loss of fine product into the "reject material" outlet. (Other factors also affect loss, such as: percent of "open area" in screen used; uneven flow rates to the sifter; ratio of screening surface to dryer capacity; amount and kind of mechanical energy applied to the screening surface; sifter design and construction; and nature of dry product being sifted.)

Screen opening dimensions may be obtained by any desired combination of wire

thickness and number of wires per inch. For instance, if the screening surface is made of stainless steel woven wire, the 0.027 inch opening might be obtained by using 24 X 24 mesh market grade screen cloth made of wire 0.014 inch thick (about 45 percent open area) or by using 30 X 30 bolting cloth screen made of wire 0.0065 inch (about 65 percent open area) or by many other mesh-wire thickness combinations. These combinations allow a wide choice to obtain desired balance between screen strength and percent open area. If materials other than stainless steel are used to construct the screening surface, similar combinations may be employed to achieve desired opening size.

Recommendations for Cleaning Dry Product Sifters

1. Dry cleaning program.--The procedures set forth below should be followed.

a. Completely dismantle and thoroughly vacuum or dry brush clean all product-contact surfaces of the dry milk sifter. Reassemble as soon as finished and make every effort to keep all parts dry.

b. Check sifter screen(s) for broken or displaced wires (threads) and for other openings around the frame of the screen, which might permit the passage of unsifted product. Other parts of the sifter, including ball trays and balls, if used, should also be inspected for condition. Any necessary repair or replacement should be made as soon as possible.

c. Flexible rubber or cloth connectors at the inlet and outlets of the sifter should be thoroughly cleaned daily following the procedures as recommended for the sifter. At this time, connectors should be closely examined for holes, cracks, or other damage. (To facilitate removal for cleaning, use of easily removable fastening devices are recommended.)

d. Thoroughly vacuum or dry-brush clean all external parts of the sifter, including the sifter frame and drive mechanism.

2. Wet cleaning program.--The procedures set forth below should be followed.

a. Completely dismantle as in 1. above; remove all loose dry product; then rinse all parts with clear water; and follow by a thorough hand brushing of all parts using a general purpose dairy cleaner. Rinse thoroughly to remove all evidence of cleaning solution or soil. It is recommended that hot water (77°C (170°F) or above) be used for rinsing in order to sanitize the equipment and to aid the subsequent drying.

b. Allow all parts to air dry completely prior to reassembly.

c. The wet wash should be done as frequently as necessary and should be done after each use if the sifter is not being used on a daily basis.

d. After cleaning, drying, and reassembly, the product outlet should be protected against recontamination.

3. General recommendations.--

a. Vacuum cleaning is preferred to brush cleaning or cleaning with air under pressure as it decreases the dust drift problem to other areas of the plant.

b. Brushes or vacuum cleaner fittings used for cleaning product contact surfaces should not be used for cleaning non-product contact surfaces or for other uses which might result in contamination. Such brushes and special fitting should be stored in an enclosed cabinet when not in use. For protection and housekeeping considerations, such cabinets preferably should be of non-wood construction and should have open mesh metal shelving.

Note.--For additions details see 3-A Sanitary Standards for Sifters for Dry Milk and Dry Milk Products Serial 26-01.

PART B. STORAGE BINS

The use of portable bins, totes, super sacks, or other portable storage containers shall comply with the construction requirements of Item 11p and the cleaning and sanitizing requirements of Item 12p of this *Ordinance.*

If interior bracing and ladders are used in plant storage bins they shall be constructed of smooth rounded metal, and be installed sufficiently far from the walls to prevent harborages. Product entrance and discharge openings connected to the attending conveying equipment shall be dust-tight and shall be easily accessible for cleaning. Vents to the exterior shall be equipped with readily removable air filters of adequate capacity or readily removable covers. If air is to be introduced into the product zone, only filtered air shall be used, and it shall comply with the applicable standards of Appendix C. Auxiliary agitators or any other interior devices, if used, shall be designed to be smooth, crevice-free, and readily cleanable. The exterior surface of the bin should be smooth, hard finished, and readily cleanable. Hinges on covers, if used, shall be the take-apart type. Covers or doors shall be provided to enclose the product zone when product is not being dumped. These shall be so constructed that dirt or dust on top will not slide or fall into the bin when the cover is open. Access openings shall be provided on all in-plant bins. Such openings should not be less than 45.7 centimeters (18 inches) in its smallest dimension. Covers shall be constructed without raised internal reinforcements and should be hinged and equipped with a quick opening device. The gaskets for such openings shall be made of solid material which is nontoxic, nonabsorbent, smooth, and unaffected by the product. Storage bins in continuous use either in the plant or in transporting dry products from one plant to another should be cleaned according to manufacturer's recommendations when necessary. They may be cleaned by either approved dry cleaning methods or wet cleaned.

PART C. PACKAGING AND PACKAGES

Packaging equipment for dry milk, dry milk products and dry whey will vary greatly as to their design depending upon whether the packages being filled are drums, bins or bags. Whatever equipment is used, it should be designed so as to protect the product from contamination from outside sources and from air during the packaging operation. All connections of conveying equipment to packaging devices should have dust-tight connections. All conveyors, ducts, belts and screws used in connection with packaging equipment should be provided with a dust collector system capable of eliminating any visible dust. All product hoppers, when used, should be provided with covers to properly protect the product from contamination. Hand filling should not be permitted except for periods of adjustment of automatic weighing devices.

APPENDIX I.

ADOPTION-BY-REFERENCE FORM OF THE GRADE A CONDENSED AND DRY MILK PRODUCTS AND CONDENSED AND DRY WHEY--SUPPLEMENT I TO THE GRADE A PASTEURIZED MILK ORDINANCE--1995 RECOMMENDATIONS

(This short form is suggested for adoption by States, municipalities, and counties subject to the approval of the appropriate legal authority. Adoption of this form will reduce the cost of publishing and printing and will enable the *Grade A Condensed and Dry Milk Products and Condensed and Dry Whey Ordinance* to be easily kept current. The adoption of this form is considered legal in many States and has been so adopted. The Council of State Governments has prepared a model State law, *Milk and Food Codes Adoption-by-Reference Act*[a] which is recommended for enactment by States to enable communities to adopt milk and food ordinances by reference).

An *Ordinance* governing the production, manufacture, packaging, labeling and sale of Grade A condensed and Grade A dry milk products and Grade A condensed and Grade A dry whey for use in the commercial preparation of Grade A pasteurized milk products; the inspection of condensed milk plants and/or milk drying plants and the issuing and revocation of permits; and the fixing of penalties; this ordinance to supplement (cite ordinance adopting *Grade A Pasteurized Milk Ordinance--1995 Recommendations of the United States Public Health Service/Food and Drug Administration* and to be enforced in conjunction with and in addition thereto:

The...of....[b] ordains:

Section 1. The production, manufacture, packaging, labeling, and sale of all Grade A condensed milk and Grade A dry milk products and Grade A condensed whey and Grade A dry whey for use in the commercial preparation of Grade A pasteurized milk products, sold within the...of...[b] or its jurisdiction; the inspection of condensing plants and/or drying plants; issuing and revocation of permits to condensing plants and/or drying plants shall be regulated in accordance with the provisions of Part II of the *Grade A Condensed and Dry Milk Products and Condensed and Dry Whey--Supplement I to the Grade A Pasteurized Milk Ordinance--1995 Recommendations of the United States Public Health Service/Food and Drug Administration*, a certified copy[c] of which shall be filed in the office of the appropriate official; *Provided*, That Sections 13 and 14 of this unabridged *Ordinance* shall be replaced respectively by Sections 2 and 3 below.

Section 2. Any person who shall violate any of the provisions of this *Ordinance* shall be guilty of a misdemeanor and upon conviction thereof, shall be punished by a fine of not more than $... and/or such persons may be enjoined from continuing such violations. Each day upon which such a violation occurs shall constitute a separate violation.

Section 3. All ordinances and parts of ordinances in conflict with this *Ordinance* shall be repealed 12 months after the adoption

of this *Ordinance*; at which time, this *Ordinance* shall be in full force and effect, as provided by law.

References

[a] A copy of the model act is included in *Suggested State Legislation Programs for 1950* developed by the Council of State Governments, 1150 Seventeenth St, N.W., Washington, D.C. 20036.

[b] Substitute proper legal jurisdiction here and in all similar places throughout the *Ordinance*.

[c] A certified copy may be secured from the Department of Health, Education, and Welfare, Public Health Service, Food and Drug Administration, HFS-626, 200 C Street, S.W., Washington, D.C. 20204.

APPENDIX J.

REPORTS AND RECORDS

The following field report has been developed for use with the *Grade A Condensed and Dry Milk Products and Condensed and Dry Whey--Supplement I to the Grade A Pasteurized Milk Ordinance--1995 Recommendations of the United States Public Health Service/Food and Drug Administration.*

DEPARTMENT OF HEALTH, EDUCATION AND WELFARE PUBLIC HEALTH SERVICE FOOD AND DRUG ADMINISTRATION	CONDENSED AND DRY MILK & WHEY PLANT INSPECTION REPORT (Including Bulk Tank Cleaning Facilities)	INSPECTING AGENCY

NAME AND LOCATION OF PLANT

PRODUCTION PER DAY	
POUNDS OF GRADE A RAW PRODUCT RECEIVED	
POUNDS OF GRADE A CONDENSED AND/OR DRY PRODUCTS PRODUCED	
MAXIMUM CAPACITY OF DRIERS AND PANS	
PERMIT NUMBER	

Sir: Inspection of your plant today showed violations existing in the items checked below. You are further notified that this inspection sheet serves as notification of the intent to suspend your permit if the violations noted arenot in compliance at the time of the next inspection. (See Section 3 and 5 of the Grade A Condensed and Dry Milk Products and Condensed and Dry Whey, Supplement I to the Grade A Pasteurized Milk Ordinance

1. FLOORS:
Smooth, impervious, no pools; trapped drain . . (a)____
2. WALLS AND CEILINGS:
Smooth, washable, light-colored; good repair . . (a)____
3. DOORS AND WINDOWS:
All openings effectively protected against entry of flies and rodents . . . . . (a)____
Outer doors self-closing; screen doors open outward . . . . . (b)____
4. LIGHTING AND VENTILATION:
Adequate light in all rooms . . . . . (a)____
Well ventilated to preclude odors and condensation; filtered air with pressure systems . . . . . (b)____
5. SEPARATE ROOMS:
Separate rooms as required;adequate size . . . . . (a)____
No direct opening to living quarters . . . . . (b)____
Storage tanks properly vented . . . . . (c)____
6. TOILET FACILITIES:
Complies with local ordinances . . . . . (a)____
No direct openings to processing rooms; self-closing doors . . . . . (b)____
Clean, well-lighted and ventilated; proper facilities . . . . . (c)____
Sewage and other liquid wastes disposed of in sanitary manner . . . . . (d)____
7. WATER SUPPLY:
Constructed and operated in accordance with Ordinance . . . . . (a)____
No direct or indirect connection between safe and unsafe water . . . . . (b)____
Condensing water and vacuum water in compliance with Ordinance requirements . . . . . (c)____
Reclaimed water complies with Ordinance . . . (d)____
Complies with bacteriological standards . . . . . (e)____
8 HAND-WASHING FACILITIES:
Located and equipped as required; clean and in good repair; improper facilities not used . . . . (a)____
9. MILK PLANT CLEANLINESS:
Neat, clean; no evidence of insects or rodents; trash properly handled . . . . . (a)____
No unnecessary equipment . . . . . (b)____
No excessive product dust . . . . . (c)____
10. SANITARY PIPING:
Smooth, impervious, corrosion-resistant, non-toxic; easily cleanable materials; good repair; accessible for inspection . . . . . (a)____
Cleaned-in-place lines meet Ordinance specifications . . . . . (b)____
Pasteurized products conducted in sanitary piping . . . . . (c)____
11. CONSTRUCTION AND REPAIR OF CONTAINERS AND EQUIPMENT:
Smooth, impervious, corrosion-resistant; non-toxic; easily cleanable materials; good repair; accessible for inspection . . . . . (a)____
Self-draining; strainers and sifters of approved design . . . . . (b)____
Approved single-service articles; not reused . . . . . (c)____
12. CLEANING AND SANITIZING OF CONTAINERS AND EQUIPMENT:
Containers, utensils and equipment effectively cleaned . . . . . (a)____
Mechanical cleaning requirements of Ordinance in compliance; recordscomplete . . . . . (b)____
Approved sanitization process applied prior to use of product-contact surfaces . . . . . (c)____
Required efficiency tests in compliance . . . (d)____
13. STORAGE OF CLEANED CONTAINERS AND EQUIPMENT:
Stored to assure drainage and protected from contamination . . . . . (a)____
14. STORAGE OF SINGLE-SERVICE ARTICLES:
Received, stored and handled in a sanitary manner; paperboard shipping containers not reused (a)____
15a. PROTECTION FROM CONTAMINATION:
Operations conducted and located so as to preclude contamination of milk, milk products, ingredients, containers, equipment and utensils . . . . . (a)____
Overflow, spilled and leaked products or ingredients discarded . . . . . (b)____
Air and steam used to process products in compliance with Ordinance . . . . . (c)____
Approved pesticides; safely used . . . . . (d)____
15b. CROSS CONNECTIONS:
No direct connections between pasteurized and raw milk and milk products . . . . . (a)____
No direct connections between milk or milk products and cleaning and/or sanitizing solutions . . (b)____
16a. PASTEURIZATION--HIGH TEMPERATURE SHORT-TIME CONTINUOUS FLOW:
(1) INDICATING AND RECORDING THERMOMETERS:
Comply with Ordinance specifications . . . . (a)____
(2) TIME AND TEMPERATURE CONTROLS:
Flow diversion device complies with Ordinance requirements; diverted flow line self-draining; stoppage precluded; proper assembly and operation; product held minimum pasteurization temperature . . . . . (a)____
Recorder-controller complies with Ordinance requirements; recorder temperature no higher than indicating thermometer temperature; cut-in and cut-out temperature at or above required temperatures; setting sealed; no bypass around sensor; sensor located properly . . . . . (b)____
Holding tube complies with Ordinance requirements; proper design and assembly; no short circuiting; proper slope and supports . . . . . (c)____
Flow promoting devices comply with Ordinance requirements; no improper manual switches; maximum speed assures 15-second hold; setting sealed as required; proper location . . . . . (d)____
16b. PASTEURIZATION--REGENERATIVE HEATING:
Pasteurized products in regenerator automatically under greater pressure than raw products in the regenerator at all times . . . . . (a)____
Accurate pressure gages installed as required; booster pump properly identified . . . . . (b)____
16c. PASTEURIZATION--TEMPERATURE RECORDING CHARTS:
HTST pasteurizer charts comply with applicable Ordinance requirements . . . . . (a)____
17. COOLING:
Raw and pasteurized products and condensed products cooled to and maintained at required temperatures . . . . . (a)____
Approved thermometer properly located in all refrigeration rooms and storage tanks . . . . . (b)____
Recirculated cooling water from safe source and properly protected; complies with bacteriological standards . . . . . (c)____
18. CONTAINER FILLING:
Dry products packaged in new containers . . . . . (a)____
Performed in sanitary manner by mechanical equipment . . . . . (b)____
Transported in sealed containers for further processing and/or packaging . . . . . (c)____
Stored in a sanitary manner . . . . . (d)____
19. CONTAINER CLOSURE, SEALING AND STORAGE:
Closing and sealing performed in a sanitary manner by mechanical equipment . . . . . (a)____
Imperfectly closed products properly handled . . . (b)____
Sanitary closure . . . . . (c)____
20. PERSONNEL CLEANLINESS:
Hands washed clean before performing plant functions; rewashed when contaminated . . . . . (a)____
No use of tobacco in processing areas . . . . . (b)____
Clean outer garments worn . . . . . (c)____
Clean bootcovers, caps and coverall worn when entering dryer . . . . . (d)____
21. VEHICLES:
Vehicles clean; constructed to protect milk . . . . . (a)____
No contaminating substances transported . . . . . (b)____
Dry products transported in sanitary manner . . . . (c)____
22. SURROUNDINGS:
Neat and clean; free of pooled water; harborages and breeding areas . . . . . (a)____
Tank unloading areas properly constructed . . . . . (b)____
Approved pesticides; used properly . . . . . (c)____

REMARKS

DATE SANITARIAN

1 Facilities for the cleaning and sanitizing of bulk transport tanks shall comply with Items 1, 4, 6, 7, 8, 9, 10, 11, 12, 14, 15, 20, 22, and as climatic and operating conditions require, applicable provisions of Items 2 and 3. In every case, overhead protection shall be required.

Note: Item numbers correspond to required sanitation items for Grade A Condensed Milk, Dry Milk Products and Dry Whey in the Grade A Condensed and Dry Milk Products and Dry Whey, Supplement I to the Grade A Pasteurized Milk Ordinance--1989 Recommendations of the U. S. Public Health Service/Food and Drug Administration.

DEPARTMENT OF HEALTH AND HUMAN SERVICES PUBLIC HEALTH SERVICE FOOD AND DRUG ADMINISTRATION			MILK PLANT EQUIPMENT TEST REPORT	
TEST NO	TEST	TEST FREQUENCY	TESTED (X OR NA)	RESULTS OF TEST (SEE REVERSE FOR WORKING NOTES)
1.	Indicating thermometers (including air space): temperature accuracy	3 months		
2.	Recording thermometers: temperature accuracy	3 months		
3.	Recording thermometers: time accuracy	3 months		
4.	Recording thermometers: checked against indicating thermometer	3 months		(Daily by operator)
5.	Flow diversion device: proper assembly and function			
	Leakage past valve seat(s)	3 months		
	Operation of valve stem(s)	3 months		
	Device assembly [micro-switch(es)]	3 months		
	Manual diversion - Parts (A, B and C)	3 months		
	Response time	3 months		
	Time delay interlock (dual stem devices) (Inspect/CIP)	3 months		
6.	Leak-protector inlet., outlet, valves: leakage (vats only)	3 months		
7.	Indicating thermometers in pipeline: thermometric response	3 months		
8.	Recorder-Controller: thermometric response	3 months		
9.	A) Setting of controls: Regenerator pressure (complete only 1,2,3 or 4)			
	1.Pressure switches to control operation of booster pumps	3 months		
	2. Time delay switches used to control operation of booster pumps	3 months		
	3. Pressure gauges: Accuracy	3 months		
	4. Differential pressure controllers			
	Both pointers or readouts within 0.5 PSI of 0.0	3 months		
	Both move together through normal pressure range	3 months		
	Differential greater than 2 PSI (seal and record)	3 months		
	b. Booster Pumps - proper wiring			
	Interwired with flow diversion device	3 months		
	Interwired with differential controller (or other pressure control instruments)	3 months		
	Interwired with metering pump	3 months		
10.	Milk-flow controls: cut-in and cut out temperatures	3 months		
11.	HTST: holding time (adjusted product holding time if applicable)	6 months		
	Magnetic Flow Meters			
	Flow Alarm	6 months		
	Loss of signal alarm	6 months		
	Flow cut-in/cut out	6 months		
	Time delay 1 (after divert)	6 months		
	Time delay 2 (after CIP)	6 months		
	HTST Indirect heating	6 months		
	HHST Direct heating	6 months		
12.	Thermal limit controller: Sequence logic	3 months		
13.	Product pressure-control switch setting	3 months		
14.	Injector differential pressure	3 months		

Remarks

PLANT	IDENTITY OF EQUIPMENT	LOCATION	DATE	SANITARIAN

NOTE: This form is a supplement to the Milk Plant Inspection Report FDA 2359 and these tests are in addition to the equipment requirements for which compliance is determined by inspection. See Appendix I, Grade A Pasteurized Milk Ordinance, Recommendations of the US Public Health Service/Food and Drug Administration.

FORM FDA 2359B, 1/96

APPENDIX K.

CHEMICAL AND BACTERIOLOGICAL TESTS

PRIVATE WATER SUPPLIES AND RECIRCULATED WATER--BACTERIOLOGICAL.

Reference.-Items 7p and 17p.

Application.--To private water supplies, used by dairy farms, milk plants, receiving stations and transfer stations, and to recirculated cooling water, used in milk plants and dairy farms.

Frequency.--Initially; after repair, modification or disinfection of the private water supplies of dairy farms and milk plants and thereafter; semiannually for all milk plant water supplies and at least every 3 years on dairy farms. Recirculated cooling water in milk plants and dairy farms shall be tested semiannually.

Criteria.--An MPN (Most Probable Number of coliform organisms) of less than 1.1 per 100 ml, when ten replicate tubes containing 10 ml, or when five replicate tubes containing 20 ml are tested, using the multiple tube fermentation technique, or less than 1 per 100 ml by the membrane filter technique, or less than 1.1 per 100 ml when using an mmo-mug technique (The MMO-MUG technique is not acceptable for recirculated cooling water). 100 ± 2.5 ml water will be used for this analysis. Any sample producing a bacteriological result of TNTC--Too Numerous To Count--(greater than 200 total bacterial colonies per 100 ml by the membrane filter technique) or confluent growth by the multiple tube fermentation (Most Probable Number - MPN) technique, without coliform present, shall have a subsequent heterotrophic plate count of less than 500 colonies per ml in order to be deemed satisfactory. Findings shall be reported as present or less than 1 per 100 ml (absent) for coliform contamination.

Apparatus, Method, and Procedure.--Conforms with *Standard Methods for Examination of Water and Wastewater*.

Corrective Action.--When the laboratory report on the sample is unsatisfactory, the water supply in question shall again be physically inspected and necessary corrections made until subsequent samples are bacteriologically satisfactory.

PASTEURIZATION EFFICIENCY--FIELD PHOSPHATASE TEST

Reference.--Section 6.

Frequency.--When any laboratory phosphatase test is positive, or any doubt arises as to the adequacy of pasteurization due to noncompliance with equipment, or standards of Item 16p.

Criteria.--Less than 1 microgram per milliliter by Scharer Rapid Method (or equivalent by other means). See *Standard Methods for the Examination of Dairy Products*.

Apparatus.--Field phosphatase test kit (obtainable from Applied Research Institute, 40 Brighton Ave., Perth Amboy, NJ 08861), standards, extra test tubes, stoppers or other approved phosphatase equipment.

Methods.--The test is based on the detection of the phosphatase enzyme, a constituent that is inactivated by pasteurization at 63°C (145°F) for 30 minutes or 72°C (161°F) for 15 seconds. When pasteurization is faulty, some phosphatase remains and is detected through its action on phosphoricphenyl esters, releasing phenol, which is measured quantitatively by the addition of dibromo-or dichloroquinonechlorimide to form an indophenol blue color.

Procedure.--See *Standard Methods for Examination of Dairy Products* for details on phosphatase tests.

Corrective Action.--Whenever a phosphatase test is positive, the cause shall be determined. Where the cause is improper pasteurization, it shall be corrected and any milk or milk products involved shall not be offered for sale.

PHOSPHATASE REACTIVATION IN HTST PASTEURIZED PRODUCTS

The presence of an appreciable quantity of phosphatase in milk and cream after heat treatment has been traditionally regarded as evidence of inadequate pasteurization. However, with the advent of modern high-temperature, short-time (HTST) methods, evidence has been accumulating that under certain conditions, the relationship between inadequate pasteurization and the presence of phosphatase does not hold.

A number of investigators who have studied HTST pasteurizing methods have concluded that while a negative test can be obtained immediately after pasteurization, the same sample may yield a positive test after a short period of storage, particularly if the product is not continuously or adequately refrigerated.

This phenomenon has come to be known as reactivation.

Reactivation may occur in HTST pasteurized products, after storage, at temperatures as low as 10°C (50°F), although 34°C (93°F) is optimum. Products of high fat content generally produce relatively more reactivable phosphatase.

Reactivation is greatest in products pasteurized at about 110°C (230°F) but may occur in products pasteurized at much higher temperatures and as low as 73°C (163°F).

It has been noted that an increase in holding time during pasteurization will reduce reactivation.

The addition of magnesium chloride to HTST processed milk or cream, after pasteurization but before storage, accelerates reactivation. The difference in activity between an adequately pasteurized sample, stored with and without magnesium, and an inadequately pasteurized sample, stored with and without magnesium, forms the basis of a test for differentiating reactivated from residual (inadequately pasteurized) phosphatase.[a]

DETECTION OF PESTICIDES IN MILK

Any regulatory agency which has adopted this *Ordinance* should operate under a control program which will insure that milk supplies are free from pesticide contamination, in conformance with Definitions N and O, Section 1, "Adulterated Milk and Milk Products" and "Misbranded Milk and Milk Products".

Pesticide compounds gain access to milk by various routes. Insecticide contamination may result from any of the following:

1. Application to the cows;

2. Inhalation of toxic vapors, by the animals, following application of insecticides to their environment;

3. Ingestion of residues in feed and water; and

4. Accidental contamination of milk, feed and utensils. Herbicide contamination may result from residues on the cow's feed and in their water supply and/or rodenticides may be present in milk as a result of accidental contamination.

At the present time, chlorinated hydrocarbon pesticides are the chief concern. While there are other pest control compounds which are more toxic than the chlorinated hydrocarbons, many of the agents in this latter group tend to accumulate in the body fat of both cows and human beings, and are secreted in the milk of contaminated cows. The accumulation of these toxic agents in persons continually consuming contaminated milk may reach hazardous concentrations.

Recent advances in residue analysis have resulted in a radical decrease in the use of paper chromatographic screening procedures for milk, because of its rather limited sensitivity. Regulatory agencies can now routinely detect residues as low as 0.01 ppm of many of the chlorinated organic pesticides. Satisfactory screening procedures should; therefore, attain this level of sensitivity which usually necessitates the use of gas chromatography or thin layer chromatography.

General screening procedures of the latter two types are described and discussed in Volume 1 of the *Pesticide Analytical Manual* published by the Food and Drug Administration.

The need for closer scrutiny of milk supplies for pesticide residues has stimulated considerable research in detection technology.[b,c, and d] The regulatory agency entering upon a surveillance program should carefully check the available equipment in relation to its adaptability to the indicated need.

While a schedule of testing comparable to that for microorganisms (four tests of individual producers milk during any consecutive 6 months) would be desirable, broad spectrum procedures are too time consuming to render such a schedule feasible. As a more practical approach, the following procedure is suggested:

1. Test one load of milk from each tank truck route, every 6 months, by a broad spectrum method and trace positive samples; or

2. Test each producer's milk four times every 6 months for the most common chlorinated hydrocarbon pesticides, by available instrumental methodology.

NOTE.-The above testing disciplines may be applied conveniently to can milk supplies. Where plan 1. is used, samples of commingled milk from known sources are drawn from receiving station storage tanks. Sampling for plan 2. may be done directly from the weigh tank.

DETECTION OF DRUG RESIDUES IN MILK

The problem of drug residues in milk is associated with their use in the treatment of mastitis and other diseases. Failure to withhold milk from the market for a sufficient length of time after treatment may result in the presence of drug residues in milk. Such milk is undesirable for two reasons; first, it comes from an unhealthy cow, and second, it is adulterated.

The allergenic properties of certain drugs in common use make their presence in milk potentially hazardous to consumers. Also, substantial losses of byproducts may be sustained by the milk industry each year because of the inhibitory effects of drug residues on the culturing process. Drug residues should be tested for, utilizing the

methods provided for in Section 6. These tests are specified in informational memoranda from the FDA.

Note: *Bacillus stearothermophilus* disk assay analysis performed to fulfill the provisions of Section 7 of the PMO must be capable of detecting at least 4 of 6 beta lactam drugs at or below FDA reference levels. A zone equal to or greater than 16mm will be considered positive when the *Bacillus stearothermophilus* disk assay is used. See the most recent FDA 2400 procedure form(s) for details related to this analysis.

NOTE: *The preceding paragraph was modified and the directions for the Bacillus stearothermophilus Disc Assay Qualitative Method were omitted in accordance with the provisions of 1995 NCIMS proposal #211 and discussions with the NCIMS Executive Board. These provisions are effective January 1, 1997.*

References

[a]Campbell, J.E. and McFarren, E.F., *Collaborative Test for Reactivated and Residual Phosphatase in Dairy Products*. Journal of the Association of Official Agricultural Chemists, 44:3 August 1961.

[b]Schafer, M.L., Bush, K.A. and Campbell, J.E., *Rapid Screening Method for DDT in Milk With Gas Chromatography*, Journal of Dairy Science, 43:1025(1963).

[c]Official Methods of Analysis of the Association of Official Analytical Chemists, 12th ed., 1975.

[d]Pesticide Analytical Manual of the Food and Drug Administration, available from the Association of Official Analytical Chemists, Box 540, Benjamin Franklin Station, Washington, DC 20044.

APPENDIX L.

PASTEURIZATION EQUIPMENT AND PROCEDURES

I. HTST PASTEURIZATION

OPERATION OF HTST SYSTEMS

HTST pasteurization has become important to the dairy industry because of the operating efficiencies which it affords. Properly operated, these units allow a high volume of production in a minimum of processing space.

The ability of HTST pasteurizers to assure a safe, finished product hinges on the reliability of the time-temperature-pressure relationships which must prevail whenever the system is in operation. It is important that the plant operator understand the HTST process in order to maintain proper surveillance over the equipment. The basic flow pattern is described below:

1. Cold raw milk, in a constant level supply tank, is drawn into the regenerator section of the HTST pasteurizer.

NOTE.--Some operators prefer to bypass the regenerator when starting. Under this system, cold milk is drawn directly through the timing pump (step 3) and into the heater section. The remaining steps are performed without exception. This bypass arrangement facilitates and speeds up the starting operation. After forward flow is established at the flow-diversion device, the bypass, which may be manually or automatically controlled, is not used and the raw milk flows through the regenerator. A second start-up technique involves the use of sanitizing solution at 77°C (170°F). This is passed through the complete unit and followed immediately by milk. Dilution of the first milk does occur; however, care must be taken to prevent this from being packaged.

2. In the regenerator section, the cold raw milk is warmed by hot pasteurized milk flowing in a counter current direction on the opposite sides of thin stainless steel surfaces.

3. The raw milk, still under suction, passes through a positive displacement timing pump which delivers it under pressure through the rest of the HTST pasteurization system.

4. The raw milk is pumped through the heater section, where hot water or steam on opposite sides of thin stainless steel surfaces heats the milk to a temperature of at least 72°C (161°F).

5. The milk, at pasteurization temperature, and under pressure, flows through the holding tube where it is held for at least 15 seconds. (The maximum velocity of the milk through the holding tube is governed by the speed of the timing pump, the diameter and length of the holding tube and surface friction.)

6. After passing the sensing bulbs of an indicating thermometer and a recorder/controller, the milk passes into the flow-diversion device which automatically assumes a forward-flow position, if the milk passes the recorder/controller bulb at the preset cut-in temperature (i.e., 72°C (161°F).

7. Improperly heated milk flows through the diverted-flow line back to the raw milk constant level supply tank.

8. Properly heated milk flows through the forward-flow line to the pasteurized milk regenerator section where it serves to warm the cold raw milk and, in turn, is cooled.

9. The warm milk passes through the cooling section, where coolant, on the sides of thin stainless steel surfaces opposite the pasteurized milk, reduces its temperature to 4°C (40°F) and below.

10. The cold pasteurized milk then passes to a storage tank or vat to await packaging.

HTST PASTEURIZERS EMPLOYING MILK-TO-MILK REGENERATORS WITH BOTH SIDES CLOSED TO THE ATMOSPHERE

Item 16p(C) of Section 7 establishes standards for regenerators. These standards insure that the raw milk will always be under less pressure than pasteurized milk in order to prevent contamination of the pasteurized milk in the event flaws should develop in the metal or joints separating it from the raw milk. An explanation of regenerator specifications is given below.

During normal operation (i.e., while the timing pump is operating), raw milk will be drawn through the regenerator at sub-atmospheric pressure. The pasteurized milk in the milk-to-milk regenerator will be above atmospheric pressure. The required pressure differential will be assured when there is no flow-promoting device downstream from the pasteurized milk side of the regenerator to draw the pasteurized milk through the regenerator, and the pasteurized milk downstream from the regenerator rises to at least 30 centimeters (1-foot elevation) above the highest raw milk level downstream from the constant-level tank, and is open to the atmosphere at this or a higher elevation, as required in Item 16p(D)2.

Figure 7. Milk-to-Milk Regeneration--Homogenizer Upstream from Holder

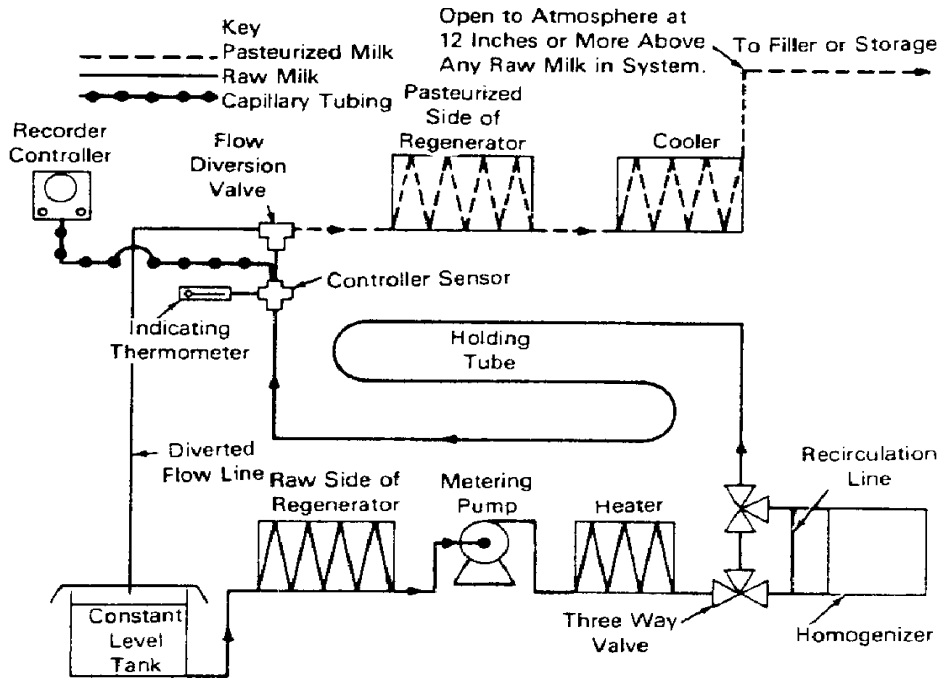

Figure 8. Milk-to-Milk Regeneration--Surface Cooler

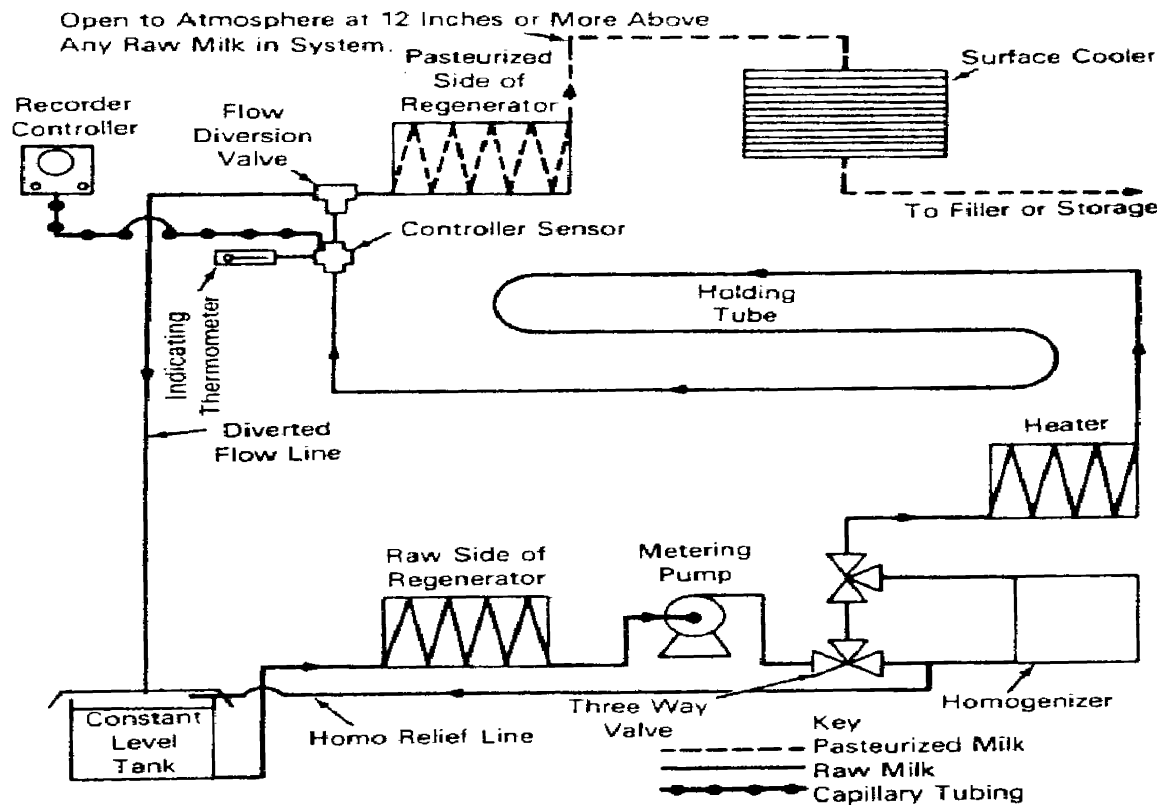

During a shutdown (i.e., when the timing pump stops), the raw milk in the regenerator will be retained under suction, except as this suction may be gradually relieved by possible entrance of air drawn through the regenerator plate gaskets from the higher outside atmospheric pressure. With a free draining regenerator, as required under Item 16p(D)7, the raw milk level in the regenerator may drop slowly, depending on the tightness of the gaskets, ultimately falling below the level of the plates to the product level in the raw milk supply tank. However, under these conditions, as long as any raw milk remains in the regenerator, it will be at sub-atmospheric pressure.

During shutdown, the pasteurized milk in the regenerator is maintained at atmospheric pressure or above by meeting the elevation requirement of Item 16p(D)2. Pressure greater than atmospheric is maintained when the level of pasteurized milk is at or above the required elevation and loss of pressure, due to suction, is prevented by prohibiting a downstream pump.

Any backflow of milk through the flow-diversion device would lower the pasteurized milk level, during pump shut-downs, thus tending to reduce the pressure on the pasteurized milk side of the regenerator. A flow-diversion valve cannot be relied upon to prevent backflow in such instances, because during the first few minutes following a pump shutdown, the milk is still at a sufficiently high temperature to keep the diversion valve in the forward-flow position. Compliance with the provisions of Item 16p(D)2 and 3; however, will insure a proper pressure differential in the regenerator.

At the beginning of a run, from the time raw milk or water is drawn through the regenerator, until the pasteurized milk or

water has risen to the elevation specified in Item 16p(D)2, the pasteurized milk side of the regenerator is at atmospheric pressure or higher. Even if the metering pump should stop during this period, the pressure on the pasteurized milk side of the regenerator will be greater than the sub-atmospheric pressure on the raw milk side. This will be assured by compliance with Item 16p(D)2 and 3, as long as any raw milk remains in the generator.

When a raw milk booster pump is incorporated into the HTST system, Item 16p(D)5 requires, in part, that automatic means shall be provided to assure, at all times, the required pressure differential between raw and pasteurized milk in the regenerator, before the booster pump can operate. The most common control employed to accomplish this is a sanitary pressure switch, installed at or downstream from the pasteurized milk outlet of the regenerator. The pressure switch is adjusted to energize the booster pump only after the pasteurized milk pressure in the regenerator exceeds, by at least .07 kPa (1 pound per square inch), the maximum operating pressure developed by the booster pump.

The setting and checking of the pressure switch used to control the proper operation of the raw milk booster pump is described in Appendix F, Test 9,1, page 121.

As an alternative control to the use of the pressure switch, the adjustable time delay relay in conjunction with a hydrostatic head, has been effectively used in HTST systems equipped with raw milk booster pumps of relatively low capacity. Such time delay relay

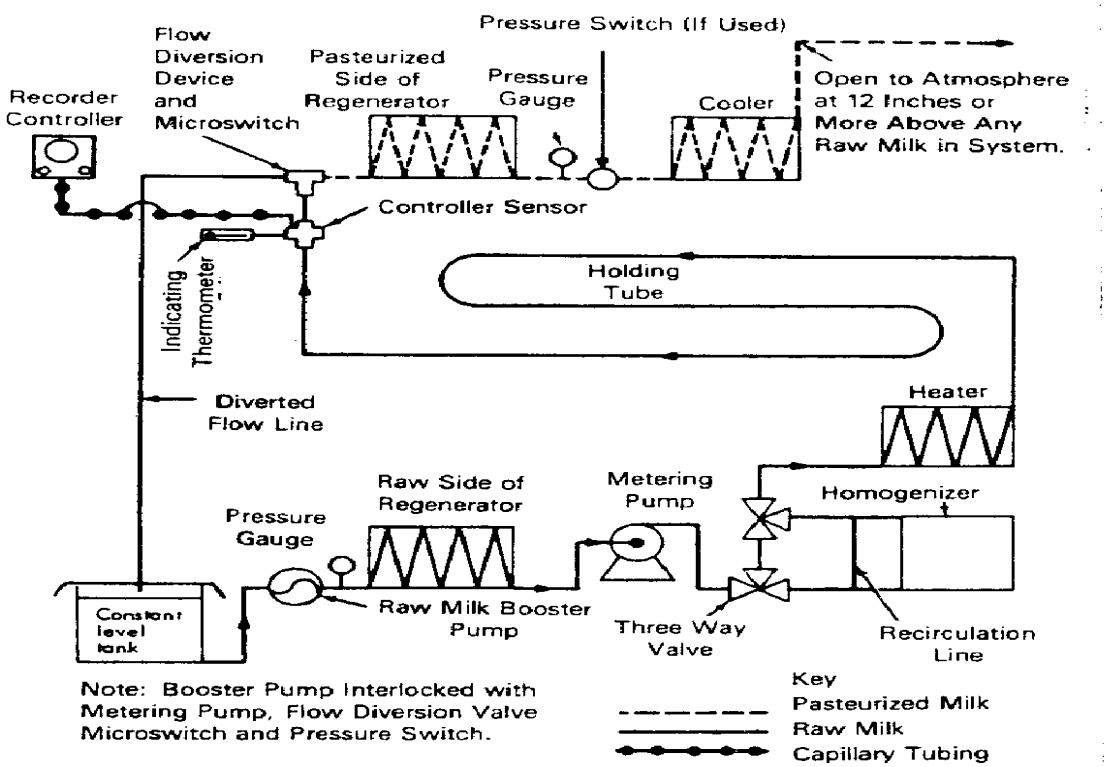

Figure 9. Milk-to-Milk Regeneration--Booster Pump

provides a predetermined time lapse between the moment the flow diversion device assumes the forward flow position and the moment the booster pump is energized. The time lapse required is that necessary for the forward flow of milk through the regenerator and cooler to rise to a height sufficiently above the booster pump outlet to provide a pressure at least .07 kPa (one pound) greater than the maximum pressure developed by the booster pump. The pasteurized milk pipeline is vented to the atmosphere at or above the necessary vertical rise.

The setting and checking of the time delay relay and hydrostatic head used to control the proper operation of the raw milk booster pump is described in Appendix F, Test 9, 2, page 121.

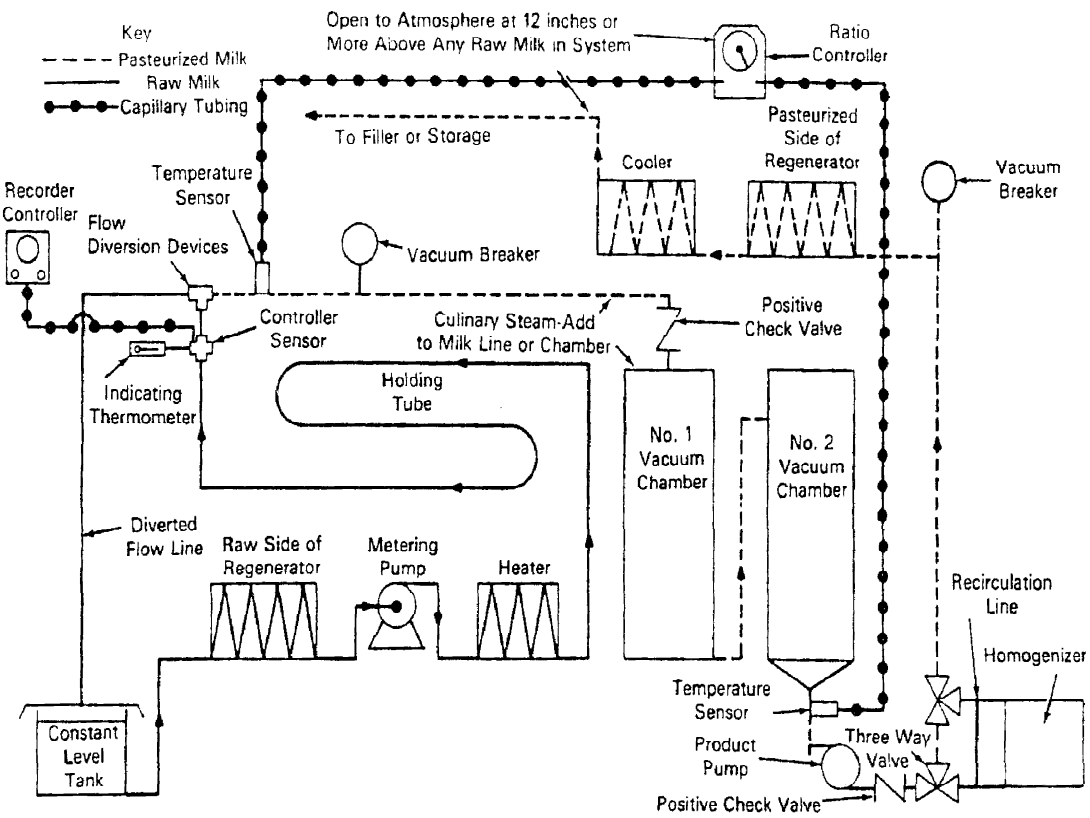

Figure 10. Milk-to-Milk Regeneration - Homogenizer and Vacuum Chambers Downstream from Flow Diversion Valve.

MAGNETIC FLOW METER BASED TIMING SYSTEMS FOR HTST PASTEURIZERS

Recent developments in the design of HTST pasteurizing systems have introduced the use of magnetic flow meter based timing systems to be used as replacements for positive displacement timing pumps with a fixed or sealed speed below the required holding time.

These systems are of two basic types:

1. Those employing a constant speed centrifugal pump and a control valve, or

2. Those employing an A-C variable frequency motor speed control for the centrifugal pump. In this case the timing pump may be centrifugal or positive displacement type.

Items 16p(B)2(f) of Section 7 (p. 96) provides for their use provided, they meet the following specifications for design, installation and use.

COMPONENTS--Magnetic flow meter based timing systems shall consist of the following components:

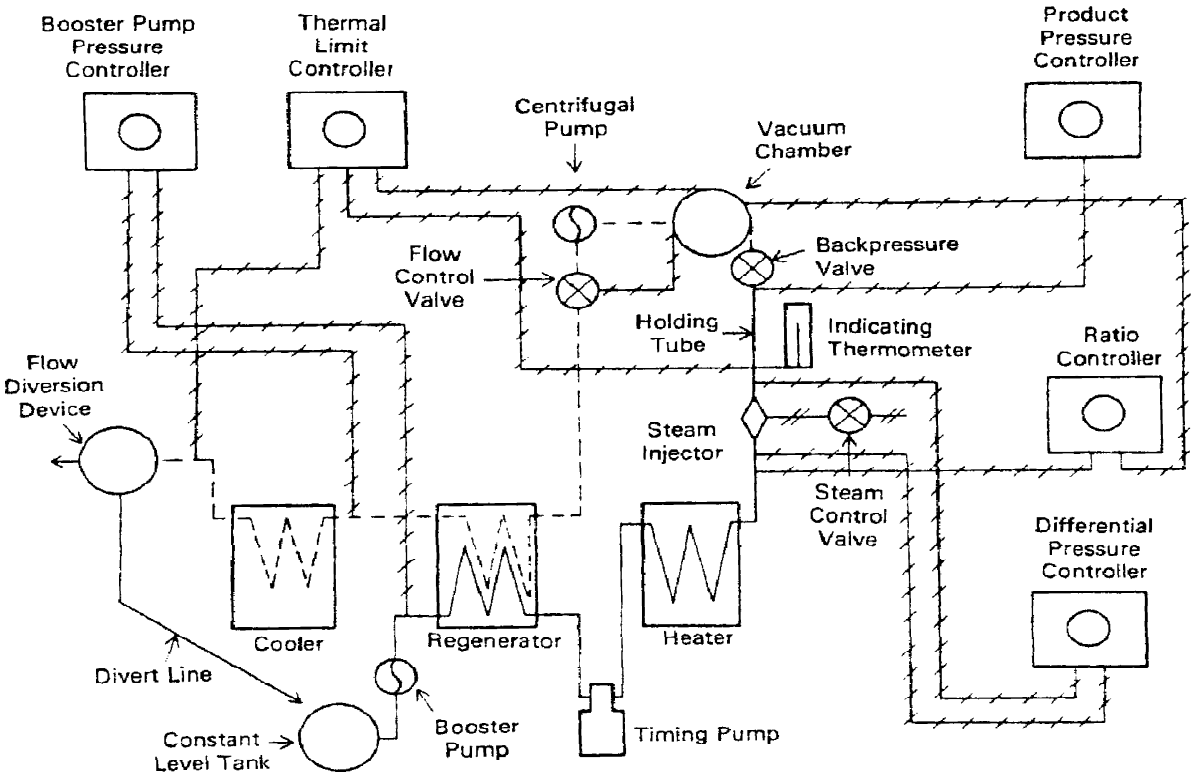

Figure 11. Controls for Steam Injection Pasteurizers

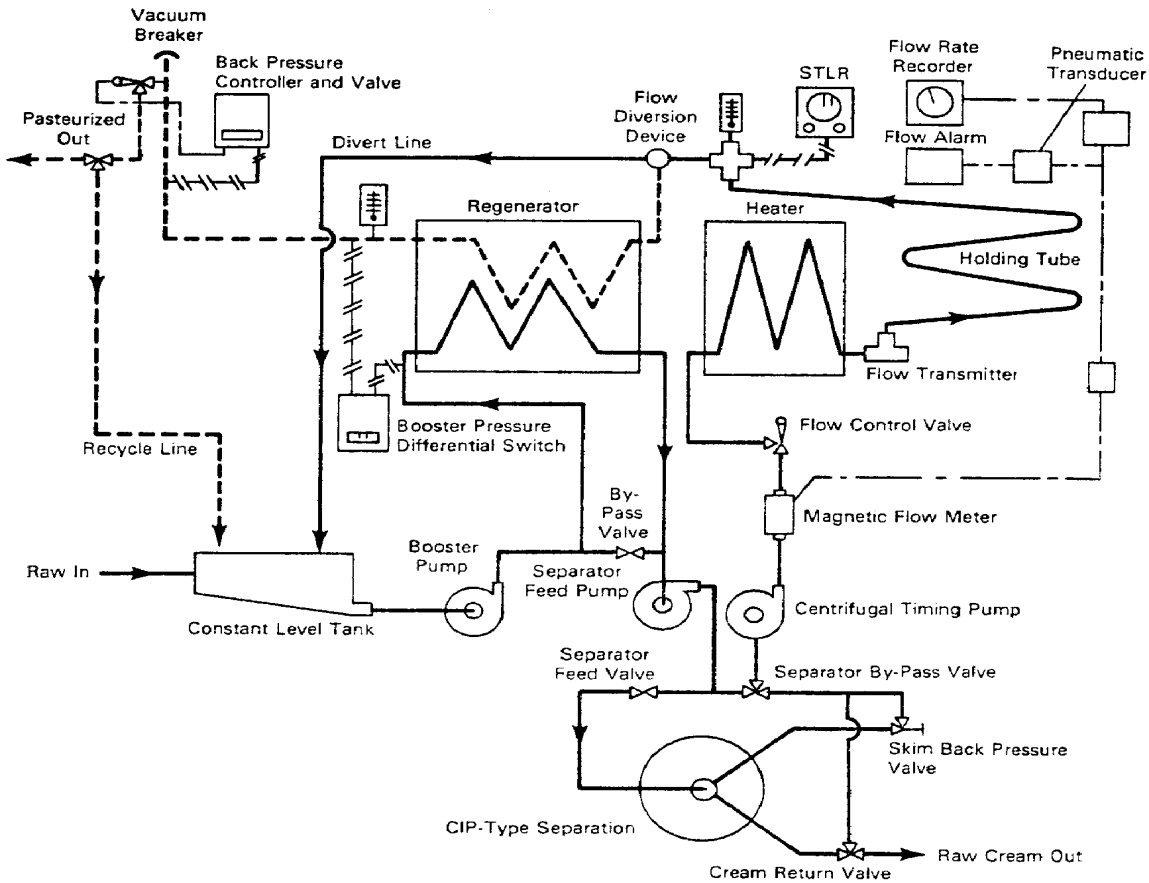

Figure 12. HTST System with Magnetic Flow Meter using a Constant Speed Centrifugal Pump and a Control Valve.

1. A sanitary magnetic flow meter which has been reviewed by USPHS/FDA or one which is equally accurate, reliable and will produce six (6) consecutive measurements of holding time within one-half (0.5) second of each other.

2. Suitable converters for conversion of electric and/or air signals to the proper mode for the operation of the system.

3. A suitable flow recorder capable of recording flow at the flow alarm set point and also at least 19 liters (5 gallons) per minute higher than the flow alarm setting. The flow recorder shall have an event pen which shall indicate the position of the flow alarm with respect to flow rate.

4. A flow alarm, with an adjustable set point, shall be installed within the system which will automatically cause the flow diversion device to be moved to the divert position whenever excessive flow rate causes the product holding time to be less than the legal holding time for the pasteurization process being used. The flow alarm shall be tested by the regulatory agency in accordance with the procedures of Appendix F, Test 11, 2. A and B (P. 128) at the frequency specified. The flow alarm adjustment shall be sealed.

5. A loss of signal alarm shall be installed with the system which will automatically cause the flow diversion device to

be moved to the divert position whenever there is a loss of signal from the meter. The loss of signal provision shall be tested by the regulatory agency in accordance with Appendix F, Test 11.2.C, page 128 at the frequency specified. The loss of signal provision shall be sealed.

6. When the legal flow rate has been re-established, following an excessive flow rate, a time delay must be instituted which will prevent the flow diversion device from assuming the forward flow position until at least a 15 seconds (milk) or 25 seconds (frozen dessert mix) continuous legal flow has been re-established. The time delay must be tested by the regulatory agency and if it is of the adjustable type shall be sealed.

7. When a constant speed centrifugal pump is used, a sanitary, spring-loaded-to- close; air-to-open, control valve shall be used to control the rate of flow of product through the HTST system.

8. When an A-C variable frequency motor speed control is used on the timing pump, the control valve is not needed as the flow rate of product through the system is controlled by feeding the signal from the magnetic flow meter to a controller which in turn varies the A-C frequency to the pump motor, thus controlling the flow rate of product through the system. With these A-C variable frequency systems, a sanitary product check valve is needed, in the sanitary milk pipe line to prevent a positive pressure in the raw milk side of the regenerator whenever a power failure, shutdown or flow diversion occurs.

9. When a regenerator is used with large systems, it will be necessary to bypass the regenerator during start-up and when the flow diversion device is in the diverted flow position. Care should be taken in the design of such bypass systems to assure that a dead-end does not exist. A dead-end could allow product to remain at ambient temperature for long periods of time and allow bacterial growth in the product. Caution should also be observed with such bypass systems and any valves used in them so that raw milk product will not be trapped, under pressure in the raw regenerator plates, and not have free drainage back to the constant level tank when shutdown occurs.

10. Most systems will utilize a dual stem flow diversion device and will be using the timing pump during the CIP cleaning cycle. All public health controls, required of such systems, must be applicable. When switching to the CIP position, the flow diversion device must move to the divert position and must remain in the diverted flow position for at least 10 minutes, regardless of temperature, and the booster pump cannot run during this 10 minute time delay.

11. All systems shall be designed, installed and operated so that all applicable tests required by Section 7, Item 16p(E) (See Appendix F, pages 111 through 181) can be performed by the regulatory agency, at the frequency specified. Where adjustment or changes can be made to these devices or controls, appropriate seals shall be applied after testing so that changes cannot be made without detection.

12. Except for those requirements directly related to the physical presence of the metering pump, all other requirements of the *Grade A Pasteurized Milk Ordinance* are applicable.

PLACEMENT OF COMPONENTS-- Individual components in the magnetic flow meter based timing systems shall comply with the following placement condition:

1. The timing pump shall be located downstream from the raw milk regenerator section, if a regenerator is used.

2. The magnetic flow meter shall be placed downstream from the timing pump.

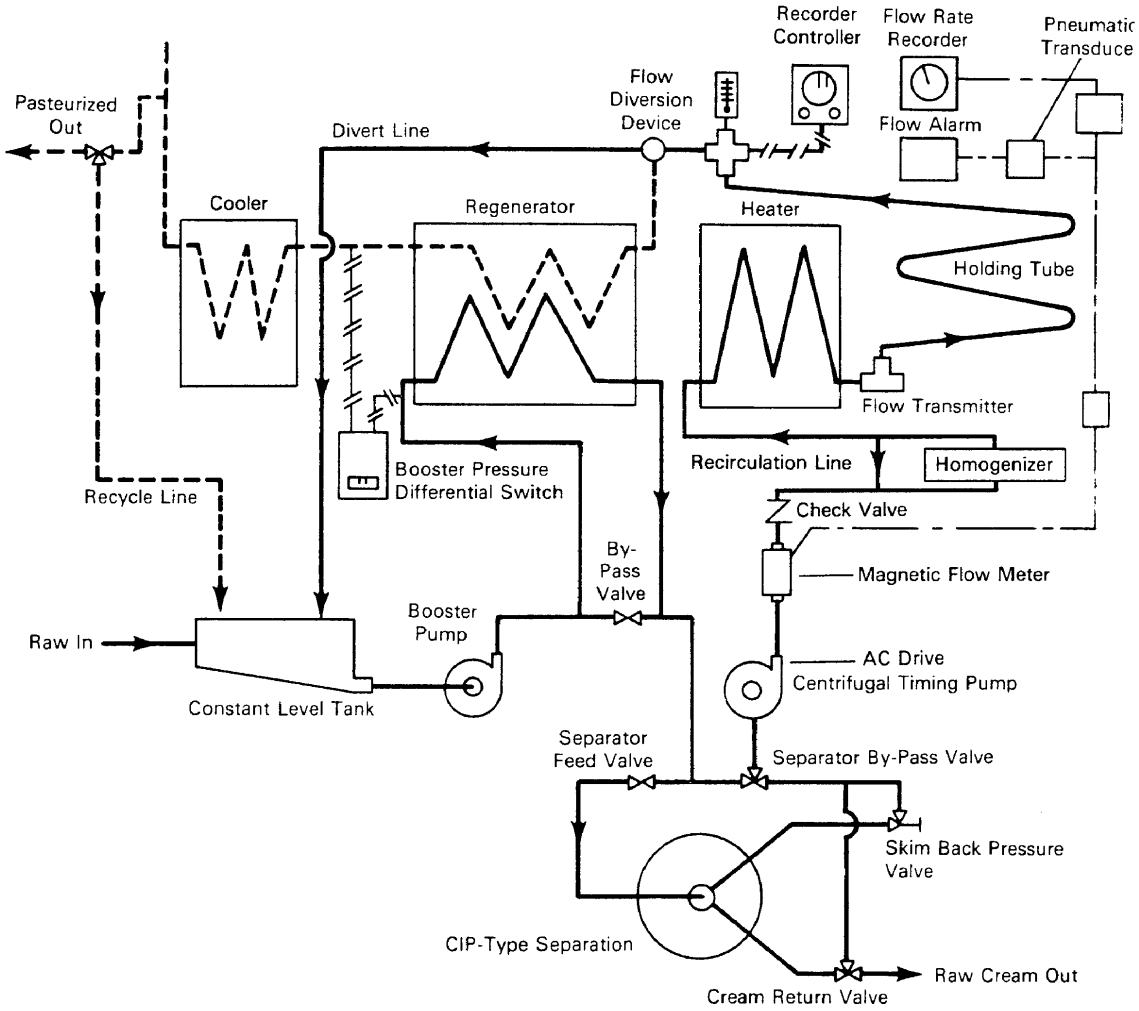

Figure 13. HTST System with a Magnetic Flow Meter Using an A-C Variable Speed Centrifugal Pump.

There shall be no intervening flow promoting components between the timing pump and the meter.

3. The control valve, used with the constant speed timing pump, shall be located downstream of the magnetic flow meter.

4. The timing pump, the magnetic flow meter, the control valve, when used with the constant speed timing pump system, and the sanitary product check valve, when used with the A-C variable frequency motor speed control system, shall all be located upstream from the start of the holding tube.

5. All flow promoting devices, which are upstream of the flow diversion device, such as timing pumps (constant speed or A-C variable frequency motor control types), booster pumps, stuffer pumps, separators and clarifiers shall be properly interwired with the flow diversion device so

that they may run and produce flow through the system at sublegal temperatures, only when the flow diversion device is in the fully diverted position, when in product run mode. Separators or clarifiers which continue to run, after power is shut off to them, must be automatically valved out of the system, with fail-safe valves, so that they are incapable of producing flow.

6. There shall be no product entering or leaving the system (i.e., cream or skim from a separator or other product components) between the timing pump and the flow diversion device.

7. The magnetic flow meter shall be so installed that the product has contact with both electrodes at all times when there is flow through the system. This is most easily accomplished by mounting the flow tube of the magnetic flow meter in a vertical position with the direction of flow from the bottom to the top. However, horizontal mounting is acceptable when other precautions are taken to assure that both electrodes are in contact with product. They should not be mounted on a high horizontal line which may be only partially full and thereby trap air.

8. The magnetic flow meter shall be piped in such a manner that at least 10 pipe diameters of straight pipe exists, upstream and downstream from the center of the meter, before any elbow or change of direction takes place. Figure 12 and 13 are schematic drawings of two typical magnetic flow meter based timing systems which illustrate proper placement of components.

Appendix M.

RESERVED FOR FUTURE USE

Appendix N

DRUG RESIDUE MONITORING AND FARM SURVEILLANCE

This appendix is established to reference safe levels and/or establish tolerances and to assure that milk supplies are in compliance with these safe levels or established tolerances for drug residues in milk.

I. INDUSTRY RESPONSIBILITIES

A. Monitoring and Surveillance.

Industry shall screen all bulk milk pickup tankers for beta lactam drug residues. Additionally, other drug residues shall be screened for by employing a random sampling program on bulk milk pickup tankers. The random bulk milk pickup tanker sampling program shall represent and include, during any consecutive six months, at least four (4) samples collected in at least four (4) separate months except when three months show a month containing two sampling dates separated by at least 20 days. Samples collected under this random sampling program shall be analyzed as specified by FDA. (See M-a-75).

Bulk milk pickup tanker testing shall be completed prior to processing the milk. Bulk milk pickup tanker samples found to be positive for drug residues shall be retained as determined necessary by the regulatory agency. Industry shall also record all sample results and retain such records for a period of six months.

B. Reporting and Farm Traceback.

When a bulk milk pickup tanker is found to be positive for drug residues, the regulatory agency shall be immediately notified of the results and the ultimate disposition of the raw milk.

The producer samples from the bulk milk pickup tanker, found to be positive for drug residues, shall be individually tested to determine the farm of origin. The samples shall be tested as directed by the regulatory agency.

Further pickups of the violative individual producer shall be immediately discontinued, until such time that subsequent tests are no longer positive for drug residues.

II. REGULATORY AGENCY RESPONSIBILITIES

A. Monitoring and Surveillance.

State regulatory agencies shall monitor industry surveillance activities by making unannounced, on-site inspections to collect samples from bulk milk pickup tankers and to review industry records of the random sampling program. A review shall include, but not be limited to, the following:

1. Is the program an appropriate routine monitoring program for the detection of drug residues? Is the program utilizing appropriate test methods?

2. Is each producer's milk represented in a testing program for drug residues and tested at the frequency prescribed in I. A. above for drug residues?

3. Is the program assuring timely notification to the appropriate regulatory agency of positive results, the ultimate disposition of the bulk milk pickup tanker milk and of the trace back to the farm of origin? Is farm pickup suspended until subsequent testing establishes the milk is no longer positive for drug residues?

The regulatory agency shall also perform routine sampling and testing for drug residues determined to be necessary as outlined in Section 6 and M-a-75.

B. Enforcement.

If testing reveals milk positive for drug residues, the milk shall be disposed of in a manner that removes it from the human or animal food chain, except where acceptably reconditioned under FDA compliance policy guidelines. The regulatory agency shall determine the producer responsible for the violation.

Penalties. The regulatory agency shall immediately suspend the Grade A permit of the responsible producer for a minimum of two days or equivalent penalty, as determined by the regulatory agency. On the second occurrence of violative drug residues in a 12 month period, the producer's permit shall be suspended for a minimum of four (4) days or equivalent penalty, as determined by the regulatory agency. For a third occurrence of violative drug residues in a 12 month period, the suspension of permit shall be the same as the 2nd occurrence and the regulatory agency shall initiate administrative procedures pursuant to revocation of the producer's permit.

Reinstatement. The Grade A producer permit may be restored to a temporary permit status, after the penalty, when a sample taken from the producers milk, in the farm bulk tank, is no longer positive for drug residues. In no event shall the Grade A permit of the violative producer be reinstated by the regulatory agency until the responsible producer and a licensed veterinarian have signed a quality assurance certificate, for display in the milkhouse, which states that the "Milk and Dairy Beef Residue Prevention Protocol", is in place and being implemented for the dairy herd(s) from which the adulterated milk, containing violative drug residues, was shipped. A copy of the Certificate of completion, signed by both the producer and a licensed veterinarian, shall be provided to the regulatory agency.

III. ESTABLISHED TOLERANCES AND/OR SAFE LEVELS OF DRUG RESIDUES

"Safe levels" are used by FDA as guides for prosecutorial discretion. They do not legalize residues found in milk that are below the safe level. In short, FDA uses the "safe levels" as prosecutional guidelines and in full consistency with CNI v. Young stating, in direct and unequivocal language, that the "safe levels" are not binding -- that they do not dictate any result, that they do not limit the agency's discretion in any way, and that they do not protect milk producers (or milk) from court enforcement action.

"Safe levels" are not and cannot be transformed into tolerances that are established for animal drugs under section 512 (b) of the Federal Food, Drug and Cosmetic Act. "Safe levels" do not (1) bind the courts, the public (including milk producers), or the agency (including individual FDA em-

ployees), and (2) do not have the "force of law" of tolerances (or of binding rules).

Notification, changes or additions of "safe levels" will be transmitted via Memoranda of Information (M-I's).

AOAC First Action and AOAC Final Action methods are accepted in accordance with Section 6. Drug residue detection methods shall be evaluated at the safe level or tolerance. Regulatory action based on each test kit method may be delayed until the evaluation is completed and the method is found to be acceptable to FDA and complies with the provisions of Section 6.

One year after test(s) have been evaluated by FDA and accepted by the NCIMS for a particular drug or drug family, other unevaluated tests are not acceptable for screening milk. The acceptance of evaluated tests does not mandate any additional screening by industry with the evaluated method.

Index

Adoption by reference Ordinance 175
Adulterated food, definition 160
Adulterated products:
 definition 4,28,160
 examination of 10,37,181
 impounding 6,30
 sale of 6,30
Air curtains 45
Air for drying equipment 57,93
Air under pressure 57,93
And/or, definition 6,30
Antibiotics (see drugs)
Appendixes, table of contents 84
Assembled equipment, sanitizing 18,54
Automatic flow controls 61
Bacterial counts:
 commingled milk 14,42
 containers 55
 enforcement procedures 7,31
 frequency 10,37
 laboratory techniques 11,38
 pasteurized milk and milk products 12,14,40,42
 raw milk for pasteurization 12,14,30,40
 recording 39
 sampling 38
Bacteria, deactivation or removal 12,40
Bactericidal efficiency 87
Bactericidal treatment (see sanitizing)
Bag fillers 20,74
Bulk storage tank, milk plant 47
Ceilings,plant 16,45
Certified:
 copies of ordinance 82
 rating officers 21,78
Charts, recording thermometer 70
Chemical, physical, bacteriological, and temperature standards 12,14,40,42
Chemical sanitizers 87
 treatment with 87
Chlorine:
 hypochlorites 87
 organic 87
Cleaning:

boil-out 167
circulation 169
containers, utensils and equipment 18,54
dry cleaning 170
evaporators and condensers 167
facilities 54
high pressure pump and high pressure lines 55,169
in place 54,167
mechanical sifters 172
spray cleaning 169
storage bins 173
storage tanks 54
transport tanks 20,76
wet cleaning of driers 169
Cleanliness:
clothing 75
equipment 18,49
hands 20,75
milk plant 17,49
personnel 20,75
surroundings 20,77
toilets 17,47
vehicles 20,76
Cloth-collector systems 18,54
Clothing, clean 20,75
Code of Federal Regulations 1,24,102
Cold storage room 19,73
Coliform counts:
condensed milk 14,42
condensed whey, ... 14,42
containers 55
dry whey 14,42
nonfat dry milk 14,42
water supply 17,48
Condensation diverting aprons 52
Condensed and dry milk products from points beyond limits of routine inspection 21,78
Condensed or concentrated products:
container closure,sealing, and storage 20,75
cooling 19,73
defined 2,25
packaging and container filling 20,74
protection from contamination 18,57
milk, definition 1,25

whey, definition 3,27
Condensing water 85
Construction:
cleaned-in-place pipelines 52
cleaned-in-place solution lines 50
milk contact surfaces 52
milk piping 50-52
milk plant 16,44
utensils and equipment 18,52
water supplies 17,48
Containers:
bacterial counts 55
cleaning 18,54
closure, sealing, and storage 20,74
construction of multi-use 18,52
efficiency of sanitization 87
protection from contamination 18,57
sanitizing 18,54
single-service 18,57
storage 18,56
coolers, refrigerants 73
Coolers, surface 73
Cooling products 19,73
Cooling temperatures 12,14,40,42
Cooling water 73
Court action 23,82
Cross connections, water supply 48
Culinary steam 102
Cyclonic or air separator collectors 52
Date of effect of ordinance 23,82
Definitions 1,25,143
Detergent-sanitizers 89
Devices, flow diversion 61
Diseases:
notification of 21,80
personnel 21,79
Distant sources, condensed and dry milk products from 21,78
Doors:
plant 16,45
screen 45
toilet 17,47
Drainage, plant floor 16,44
Drier nozzle 52

Page

Drugs 6,10,14,,30,37,42,160,181,197
Drying chamber, burn-on 167
Dry storage rooms 75
Dry whey, definition 4,28
Electric screen panels 45
Emergency suspension of permit 7,31
Enforcement procedures 31
Environmental Protection Agency 57,77
Equipment:
 cleaning 18,54
 construction and repair 18,52
 handling after sanitizing 18,56
 protection from contamination 18,57
 sanitizing 18,54
 storage 18,56
 tests 111
Evaporation:
 barometric leg 48
 condenser 85
 temperatures 167
 vacuum pump 65
Evaporating, drying,and dry product equipment cleaning 167
Evaporators, condensing water for 85
Evaporators, types:
 falling film 167
 multiple-effect 167
 plate-type 167
Examination:
 containers 55
 medical 21,80
 condensed and dry milk products 10,37
 water 48
Federal Food, Drug, and Cosmetic Act 8,24,143-167
 adulterated food, definition 4,30,160,181
 misbranded food, definition 4,28,30,161
Filters 93-93
Flies, control measures 16,20,45,77
Floor construction, plant 16,44
Flow controls, automatic 61
Flow-diversion device 61
Flow-diversion device, tests for proper functioning 115,119
Flow promoting devices 65
Food, Drug, and Cosmetic Act (See Federal Food, Drug, and Cosmetic Act)

Page

Footnotes 23,82
Forms:
 inspection 10,36,37,178
 ledger 38
 testing 111
Future condensing plants and drying plants 21,78
Glass piping 52
Grade A raw milk / pasteurization 14,42
Handling of containers, utensils, and equipment 18,56
Hand-washing facilities 17,75
Hands, cleanliness 20,75
Header ends 74
Health of personnel 21,79
Hearings 7,31
High pressure pump 52,169
High-temperature short-time
 pasteurization 61-72
Holding time, equipment for testing:
 pasteurization 64
 tests for 128
Holding tube 64
Homogenizers 65
Hot water, sanitizing with 90
Hydrogen-ion concentration (pH) 92
Identity labeling 8,33
Impounding milk and milk products 6,30
Indicating thermometers:
 HTST pipeline 61,112
Individual water supply 48
Industry:
 laboratory examinations by 5,29
 records 5,46
Infection,procedure when suspected 21,80
Ingredients:
 optional 143
 protection from contamination 18,57
 storage and handling 18,57
Insect control 20,77
Insecticides 77
Inspection:
 beyond limits of routine 21,80
 condensing and/or drying plants 9,35
 forms 10,36,37

Page

frequency 9,35
posting reports 10,36
reports 10,36
Interstate shipment of condensed and dry products 21,78
Iodine compounds 89
Labeling:
identity 8,33
misleading 9,33,35,161
requirements 8,33
vehicles 20,76
Laboratory:
official 5,29
officially designated 5,29
techniques and tests 5,29,181
Leak escape, flow-diversion device 61
Lighting, milk plant 16,46
Liquid refrigerants 73
Lubricants 52
Medical examination 21,80
Metering pumps 65
Mezzanines and platform 59
Milk:
adulterated 4,30,160
bacterial counts 10,11,12,14,38,40
cans 46,52,56
cooling 12,14,19,73
definition 4,28,160
evaporator 167
examination of 12,40
from distant sources 21,78
grade A raw for pasteurization 14,42
misbranded 4,28,161
processing other products in milk plant 18,57
products, definition 2,27,143
protection from contamination 18,57
rating 21,78
skim, definition 1,25,143
spilled, overflowed, leaked 18,57
standards; chemical,physical,bacteriological, and temperature 12,40
transportation 20,76
ungraded, sale of 6,30
vitamin A 143
vitamin D 143

Milk condensing and/or drying plant:
definition 5,29
future 21,78
surroundings 20,77
Milk flow controls 61
Milk piping 17,50
Milk products (see milk)
Milk pumps 65
Milk and milk product storage tanks, milk plant 19,73
Misbranded condensed and dry milk products:
definition 4,28,161
impounding 6,30
sale of 6,30
Misbranded food, definition 4,28,161
Misleading labels 9,33,161
Multiuse containers, utensils and equipment 18,54
Nonfat dry milk, definition 2,26,143
Notification of disease 21,79
Official laboratory, definition 5,29
Officially designated laboratory, definition 5,29
Overflow, product 18,57
Overhead piping 59
Packaging equipment:
dust-tight connections 174
Packaging machines 74,75
Partitioning:
plant 16,46
receiving room 16,46
Pasteurization:
definition 4,28
high-temperature short-time 191
product-to-product regenerative heating 68
Pasteurization equipment and controls, tests 111
Penalty for violations 23,82
Permits:
hearings 7,31
issuance of 7,31
plant operator 6,30,31,37
reinstatement of 33
requirements for 7,30
revocation of 32
suspension of 32
Person, definition 6,30

Page

Personnel, cleanliness 20,75
Pesticides 11,38,57,160
insecticides 57,77
rodenticides 58,77,183
Phosphatase 11,14,38,42,181
Pipelines:
cleaned-in-place 50,50
indicating thermometer 61,112
welded 50
Piping, sanitary 50
Plans, cleaned-in-place pipeline systems 50
Plans, plant 21,78
Plant:
cleanliness 17,49
condensing and/or drying, definition 1,25
direct openings into 16,45
doors and windows 16,45
floor construction 16,44
future 21,78
hand-washing facilities 17,49
inspection 9,35
inspection forms 10,36,177
lighting and ventilation 16,46
plans 21,78
receiving room 16,46
separate rooms 16,46
sewage disposal 17,47
surroundings 20,77
toilets 17,47
walls and ceilings 16,45
water supply 17,48
Plastic materials 50,52
Posting inspection report 10,36,37
Powder removal system 170
Pressure differential controller 68
Private water supplies (see individual water supplies)
Procedure when infection suspected 21,80
Processing other products 18,57
Product-contact surface 18,52
Protection from contamination 18,57
Public health value of pasteurization 60
Pumps, metering 65
Quaternary ammonium compounds 88

Ratings, milk sanitation 21,78
Raw milk, Grade A for pasteurization 14,42
Receiving and dump vats 57
Receiving room, milk plant 16,46
Recirculated water and refrigerants 74
Recorder/controllers 61,120,191
Recording thermometer charts 61,70
Recording thermometers 61,107
Records, access to industry 10,35
Regenerators, milk-to-milk 68
Regulatory agency, definition 5,29
Reinstatement of permits 33
Repair of containers, utensils and equipment 18,52
Repasteurization 18,57
Repeal 23,82
Reports and records 177
Revocation of permits 31,35
Rodent control 16,20,49,77
Rodenticides 58,77,183
Rubber and rubber-like materials 50,52
Sale of adulterated condensed and dry milk products 6,30
Sale of ungraded condensed and dry milk products 6,30
Samples, milk and milk products:
 application and frequency 10,37
 examination 10,37
 procedures 11,38
Samples, water:
 application and frequency 48
 examination 48
Sanitary piping 17,50
Sanitation requirements: Grade A raw milk for pasteurization 14,42
Sanitizers, test for strength of 91
Sanitizing:
 assembled equipment 87
 bulk transport tanks 76
 chemical 87
 containers, utensils, and equipment 18,54,87
 definition 5,29
 efficiency of 87
 hot air 169
 hotwater 90
 hypochlorites 87
 iodine 89

organic chlorine compounds 87
quaternary ammonium compounds 88
steam 54,90
Screening, plant 45
Sensors, temperature 64-68
Separability clause 23,82
Separate rooms,plants 16,46
Sewage disposal facilities 17,47
Shields:
conveyor 57,59
surface cooler 74
Shipping statement 8,33
Short-time high-temperature pasteurization 61
Shutting down steam heat drier 170
Sifters 53,172
Sifting screen opening dimensions 172
Silo tanks 54
Skim milk, definition 1,25,143
Solution lines, CIP 50
Spray driers, principle of 170
Stainless steel 50
Standards:
chemical, physical, bacteriological, and temperature 14,40
milk and milk products 14,40
pasteurized milk containers 55
single-service articles 55
3-A sanitary 204
water 48,85
Steam:
culinary 102
jets 54,90
sanitizing with 90
toxicity 57,102
Storage:
ingredients and non-product contact materials 18,56
product 18,57
multi-use containers, utensils, and equipment 18,56
single-service containers, utensils, equipment 18,57
toxic materials 18,57
Storage bins:
cleaning 56,173
portable bins 20,173
Storage tanks, plant 56

Page

Storage tank thermometers 56,107
Submerged inlets, water supply 48
Surface coolers 74
Surroundings, plant 20,77
Switches; manual, automatic 64
Tailings 53
Tanks:
bulk storage,plants 56
storage and transportation, protection during 57,76
transportation, cleaning facilities 76
Temperature:
cooling 12,14,19,42,73
cut-in and cut-out tests for 126
heat-treatment (raw milk for cheese) 40
pasteurization 4,57
recording charts 61,70,107
sensors 61-68
Tests:
drugs 10,14,38,42
control switches, regenerator pressure 68,121
cut-in cut-out temperatures 126
equipment 111
flow-diversion device operation 61,115
holding time 64,128
indicating thermometers 61,107,112
HTST recorder/controller 61
laboratory 5,29,181
pesticides 11,38,57,160
pH (hydrogen-ion concentration) 92
phosphatase 11,14,38,42,181
recorder/controller 61,107
recording thermometers 61,113
recording thermometers, check against indicating 114
residual chlorine 91
sanitizer strengths 91
sanitizing, efficiency of 87
single-service articles, bacteriological 55
water, hardness 92
Thermal limit controllers 61-68
Thermometer, charts recording 61,70,107
Thermometers:
cleaning systems 54,107
general purpose 111

Page

Indicating:
pipeline 107
storage rooms 107
tanks 107
mechanical cleaning systems 107
pasteurization 61
recorder controllers 61
recording 54,107
specifications 107
temperature sensors 107
testing of 107
Thermometric response 119
3-A sanitary standards 53
Tobacco, use of 20,75
Toilet:
cleanliness 17,47
doors 17,47
lighting 17,47
plant 17,47
ventilation 17,47
Toxic materials 18,20,57,76,93
Transportation tanks:
cleaning and sanitizing 16,18,47,54
shipping statement 8,33
unloading 76
Trash storage 76
Tube, holding 64
United States Environmental Protection Agency 58,78
Ungraded products 6,30
Utensils:
cleaning 18,54,87
construction 18,52
handling after sanitizing 18,50
protection from contamination 18,56
sanitizing 18,54
storage 18,56
Vacuum:
breakers 65,68,121,167
equipment 170
water to produce 48
Validity of Ordinance 23,82
Valves:
inlet and outlet 76

Vehicles:
construction 20,76
labeling 8,33
sanitation 20,47,20
Ventilation:
plant 16,46
pressurized 46
toilet rooms 17,37
Vermin control 16,20,45,77
Violations, procedures when noted 9,35
Walls, plant 16,45
Waste disposal 17,47
Water:
boiler 85,102
cooling, recirculated 74
hardness, test for 92
Water reclaimed from milk, milk products, and whey 85
Water supplies:
condenser 48,85
disinfection 48
distribution systems, disinfection 48
individual 48
location 48
plant 48
sampling 48
special protection 48
standards 85
treatment of 48
Welded pipelines 50
Windows, milk plant 16,45
Whey:
condensed, definition 4,28
cooling 19,73
crystallization 19,73
definition 3,27
dry, definition 4,28
examination of 10,37
from distant sources 21,78
heat-treatment(raw milk for cheese) 40
standards; chemical, physical, bacteriological, and temperature 14,42
transportation 18,57
Whey condensing and/or drying plant, definition 5,29
Whey, condensed whey, and dry whey storage tanks 52,73